AUTOMOTIVE & TRUCK TRANSMISSIONS

WARNER GEAR DIVISION
BORG-WARNER CORP.
MUNCIE, INDIANA
U. S. A.

Printed in U.S.A.

WARNER GEAR DIVISION
Borg-Warner Corporation
Muncie, Indiana

GENERAL DESCRIPTION OF TRANSMISSION MODELS

Model	Control	Speeds	Ratios	Torque Capacity in Lbs. Ft.	Clutch Housing Mountings	Power Take-Off Mountings
**T9 (Truck)	Remote or Cane	4 Not Synchro.	1st 6.40 to 1.0 2nd 3.09 to 1.0 3rd 1.69 to 1.0 4th 1.0 to 1.0 Rev. 7.82 to 1.0	185	S.A.E. #3 S.A.E. #4 S.A.E. #5	1 Right S.A.E. Regular Duty Type Opening
**T9A (Truck)	Remote or Cane	4 Not Synchro.	1st 5.90 to 1.0 2nd 3.09 to 1.0 3rd 1.69 to 1.0 4th 1.0 to 1.0 Rev. 7.21 to 1.0	185	S.A.E. #3 S.A.E. #4 S.A.E. #5	1 Right S.A.E. Regular Duty Type Opening
T10 (Pass.Car)	Remote	4 Synchro.	1st 2.20 to 1.0 2nd 1.66 to 1.0 3rd 1.31 to 1.0 4th 1.0 to 1.0 Rev. 3.36 to 1.0		Special for Customer	None
**T9-L2 (Truck)	Same as T9 except also full reversing					1 Right S.A.E. Regular Duty Type Opening
T92 (Pass. Car & Indus.)	Cane	3 Not Synchro.	1st 3.294 to 1.0 2nd 1.721 to 1.0 3rd 1.0 to 1.0 Rev. 3.294 to 1.0	50	Special for Customer	None
T96 (Pass. Car & Indus.)	Remote or Cane	3 Synchro.	1st 2.605 to 1.0 2nd 1.630 to 1.0 3rd 1.0 to 1.0 Rev. 3.536 to 1.0	150	Special for Customer	None
T96-R10B (Pass.Car)	Remote	3 Synchro. and Overdrive	1st 2.605 to 1.0 2nd 1.630 to 1.0 3rd 1.0 to 1.0 O.D. .7 to 1.0 Rev. 3.536 to 1.0	150	Special for Customer	None

Model	Control	Speeds	Ratios	Torque Capacity in Lbs.Ft.	Clutch Housing Mountings	Power Take-Off Mountings
T90B (Truck)	Remote	3 Synchro.	1st 3.334 to 1.0 2nd 1.85 to 1.0 3rd 1.0 to 1.0 Rev. 4.53 to 1.0	165	Special For Customer	None
T90C (Truck)	Cane	3 Synchro.	1st 2.798 to 1.0 2nd 1.551 to 1.0 3rd 1.0 to 1.0 Rev. 3.798 to 1.0	165	Special For Customer	None
T90J (Truck)	Cane	3 Synchro.	1st 2.798 to 1.0 2nd 1.551 to 1.0 3rd 1.0 to 1.0 Rev. 3.798 to 1.0	165	Special For Customer	None
T90B-R10B (Truck)	Remote	3 Synchro. and Overdrive	1st 3.334 to 1.0 2nd 1.85 to 1.0 3rd 1.0 to 1.0 O.D. .7 to 1.0 Rev. 4.53 to 1.0	165	Special For Customer	None
** T87E (Truck)	Cane or Remote	3 Synchro.	1st 3.714 to 1.0 2nd 1.871 to 1.0 3rd 1.0 to 1.0 Rev. 4.588 to 1.0	220	S.A.E. #3 S.A.E. #4 S.A.E. #5	None
** T87F (Truck)	Remote	3 Synchro.	1st 3.217 to 1.0 2nd 1.871 to 1.0 3rd 1.0 to 1.0 Rev. None	220	S.A.E. #3 S.A.E. #4 S.A.E. #5	None
**T98A (Truck)	Cane or Remote	4 Synchro.	1st 6.398 to 1.0 2nd 3.092 to 1.0 3rd 1.686 to 1.0 4th 1.0 to 1.0 Rev. 7.820 to 1.0	220	S.A.E. #3 S.A.E. #4	1 Right or Left S.A.E. Regular Duty Type Opening
**T98A-L2 (Truck)	Same as T98A except also full reversing					1 Right S.A.E. Regular Duty Type Opening

Model	Control	Speeds	Ratios	Torque Capacity in Lbs. Ft.	Clutch Housing Mountings	Power Take-Off Mountings
T86E (Pass.Car)	Remote	3 Synchro.	1st 2.571 to 1.0 2nd 1.550 to 1.0 3rd 1.0 to 1.0 Rev. 3.489 to 1.0	220	Special For Customer	None
T86E-R10B (Pass.Car)	Remote	3 Synchro. and Overdrive	1st 2.571 to 1.0 2nd 1.550 to 1.0 3rd 1.0 to 1.0 O.D. .7 to 1.0 Rev. 3.489 to 1.0	220	Special For Customer	None
T89A (Light Truck)	Remote	3 Synchro.	1st 2.518 to 1.0 2nd 1.631 to 1.0 3rd 1.0 to 1.0 Rev. 2.991 to 1	220	Special For Customer	None
T89B (Light Truck)	Remote	3 Synchro.	1st 3.167 to 1.0 2nd 1.753 to 1.0 3rd 1.0 to 1.0 Rev. 3.761 to 1.0	220	Special For Customer	None
T85C (Pass.Car)	Remote	3 Synchro.	1st 2.49 to 1.0 2nd 1.587 to 1.0 3rd 1.0 to 1.0 Rev. 3.154 to 1.0	300	Special For Customer	None
T85C-R11 (Pass.Car)	Remote	3 Synchro. and Overdrive	1st 2.49 to 1.0 2nd 1.587 to 1.0 3rd 1.0 to 1.0 O.D. .7 to 1.0 Rev. 3.154 to 1.0	300	Special For Customer	None
Model #5 (Truck or Pass.Car)	Auto. 2-3 Detent 1-2-3	3	1st 2.4 to 1.0 2nd 1.467 to 1.0 3rd 1.0 to 1.0 Rev. 2.0 to 1.0	250	Converter Hsg. Mounting Special for Customer	None
Model #5 (Truck or Pass.Car)	Auto. 1-2-3	3	1st 2.4 to 1.0 2nd 1.467 to 1.0 3rd 1.0 to 1.0 Rev. 2.0 to 1.0	250	Converter Hsg. Mounting Special for Customer	None

Model	Control	Speeds	Ratios	Torque Capacity in Lbs.Ft.	Clutch Housings Mountings	Power Take-Off Mountings
Model #5 (To take transfer box for 4-Wheel Drive)	Auto. 2-3 or 1-2-3	3	1st 2.4 to 1.0 2nd 1.467 to 1.0 3rd 1.0 to 1.0 Rev. 2.0 to 1.0	250	Converter Hsg.Mounting Special for Customer	Special Through Transfer Box
R10-F R10-G R10-H	Speed Throttle	2	Conven. 1.0 to 1.0 O.D. .7 to 1.0	230	----	None
72N	Special	1 forward 1 reverse	1.0 to 1.0 forward and reverse		Converter housing mounting S.A.E. #3 & #4	None
72P	Cane or Remote	3 full reverse	Same as T87E	220	Converter housing mounting S.A.E. #3 & #4	None
72Q	Cane or Remote	4 full reverse	Same as T98A	220	Converter housing mounting S.A.E. #3 & #4	None

**In general front end fittings to apply to the following engines:

Hercules White	Continental Nash	Waukesha Wisconsin	Ford Buda	Studebaker International Harvester

INDUSTRIAL TRANSMISSIONS

Model	Control	Speeds	Ratios	Converter Housing Mounting	Drop Center Line Input Shaft to Center Line Output Shaft	Brake	Gearing	Dry Weight
T12	Power Shift Forward & Reverse	1	High 1.19 to 1.00	S.A.E. #3 & #4	4.250 in.	No	8 Pitch Spur	224 lbs.
T11	Forward & Reverse Power Shift High & Low Manual	2	High 1.19 to 1.00 Low 2.41 to 1.00	S.A.E. #3 & #4	4.250 in.	No	8 Pitch Spur	261 lbs.
T22	Forward & Reverse Power Shift High & Low Power Shift	2	High 1.1 to 1.00 Low 1.88 to 1.00	S.A.E. #3 & #4	9.143 in.	Yes	8 Pitch Spur	356 lbs.
T22A	Forward & Reverse Power Shift High & Low Power Shift	2	High .713 to 1.00 Low 2.29 to 1.00	S.A.E. #3 & #4	9.143 in.	Yes	8 Pitch Spur	361 lbs.

Although the above transmission models have been rated as to capacity, the rating is only a very general index as to the type of application for which the model was intended. Other operational factors of the vehicle influence the capacity requisite of the transmission in addition to engine torque. Therefore we do not recommend or warrant any model transmission unless we have full knowledge of all the details of a specific application and give our approval.

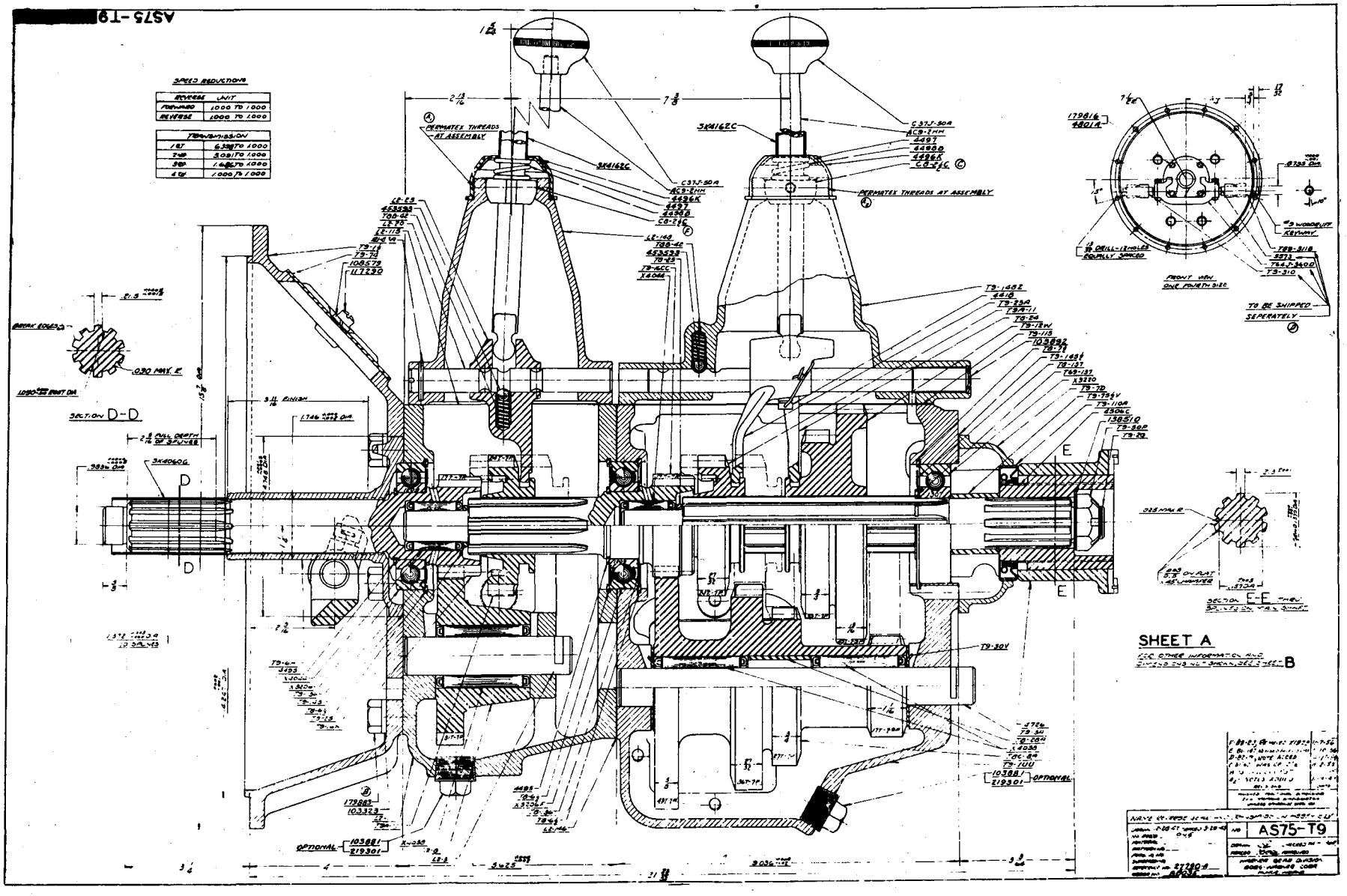

NO. AS75-T9 REVERSE GEAR AND TRANSMISSION ASSEMBLY

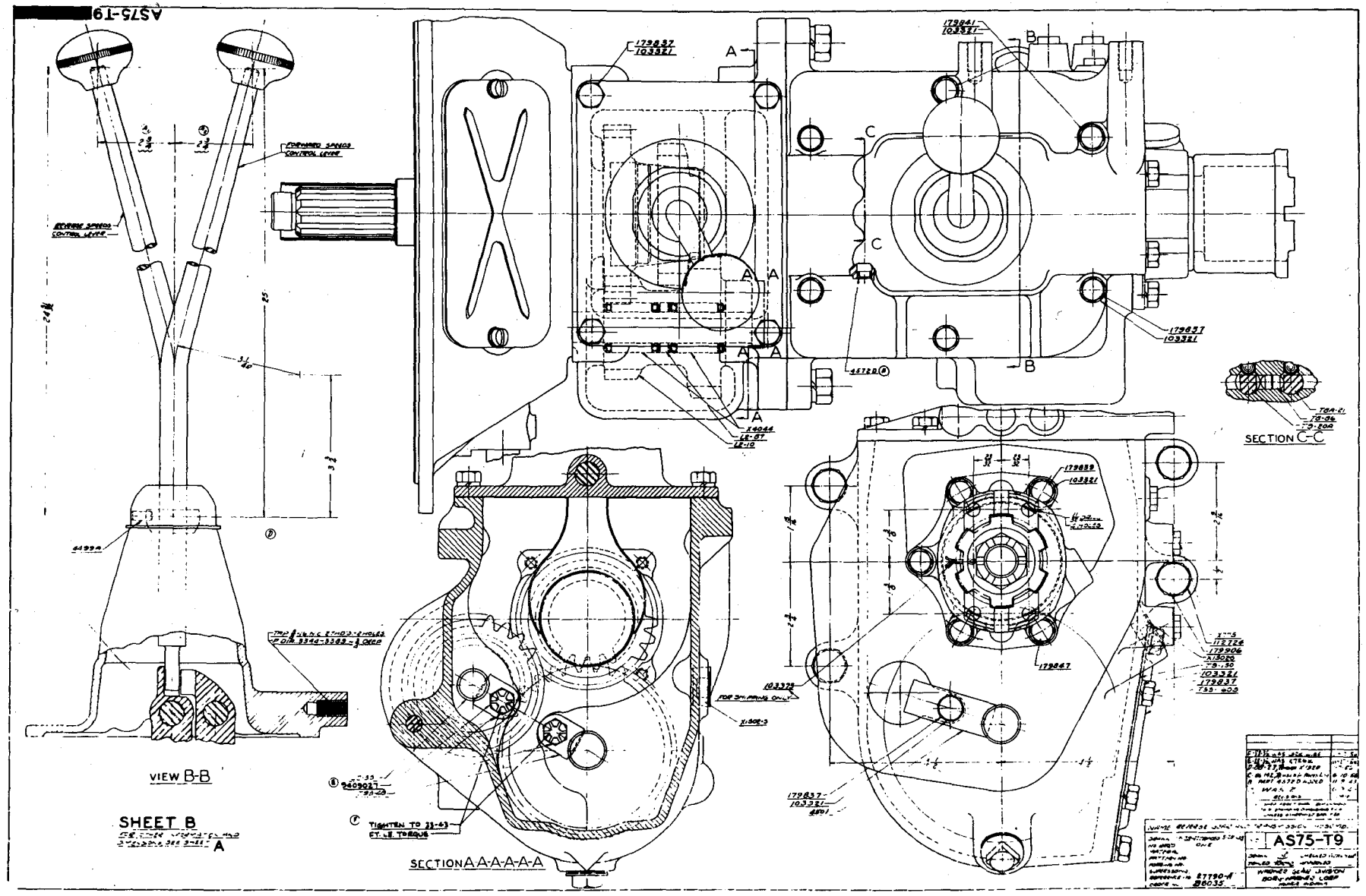

NO. AS75-T9 REVERSE GEAR AND TRANSMISSION ASSEMBLY

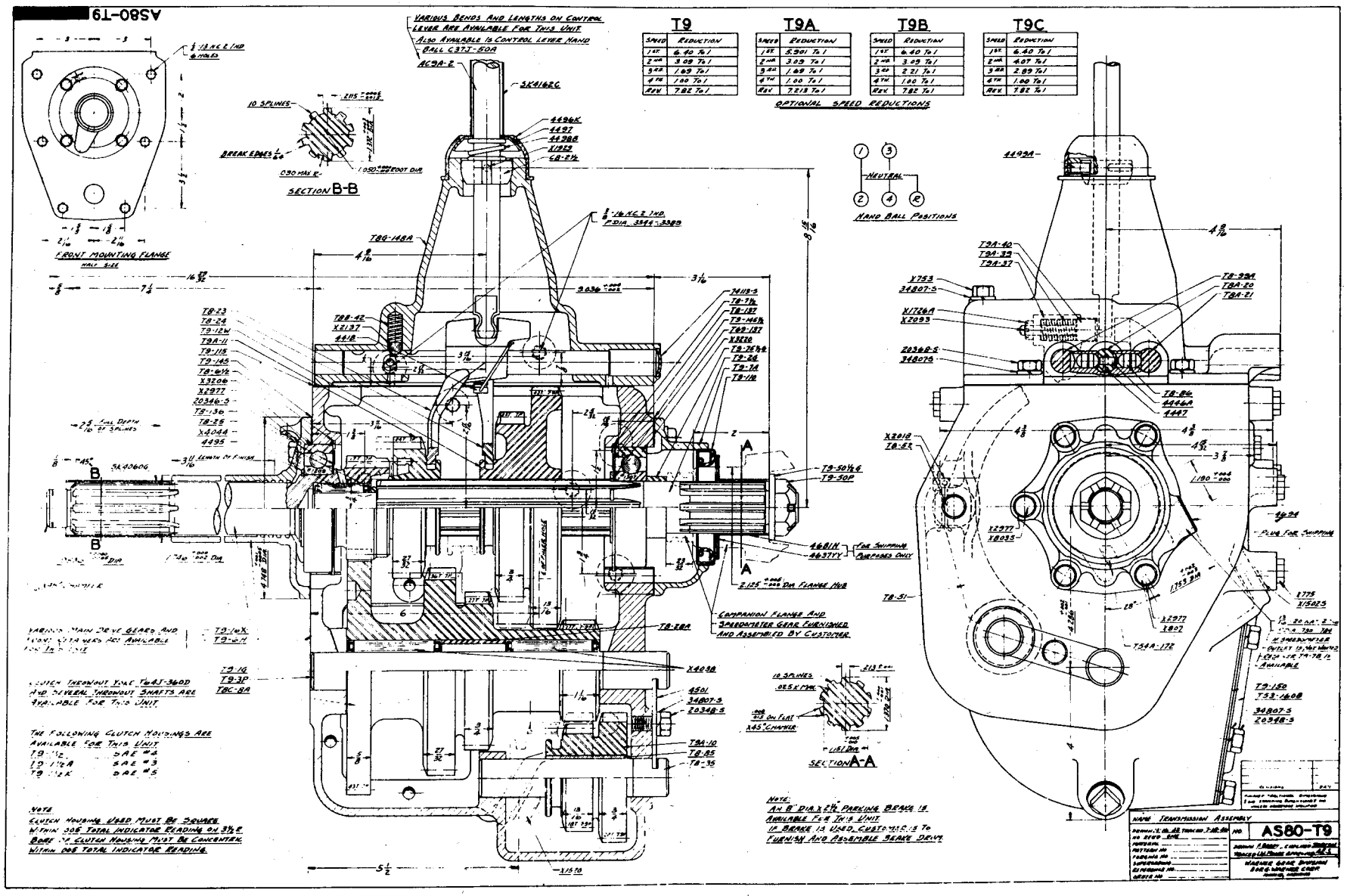

NO. AS80-T9 TRANSMISSION ASSEMBLY

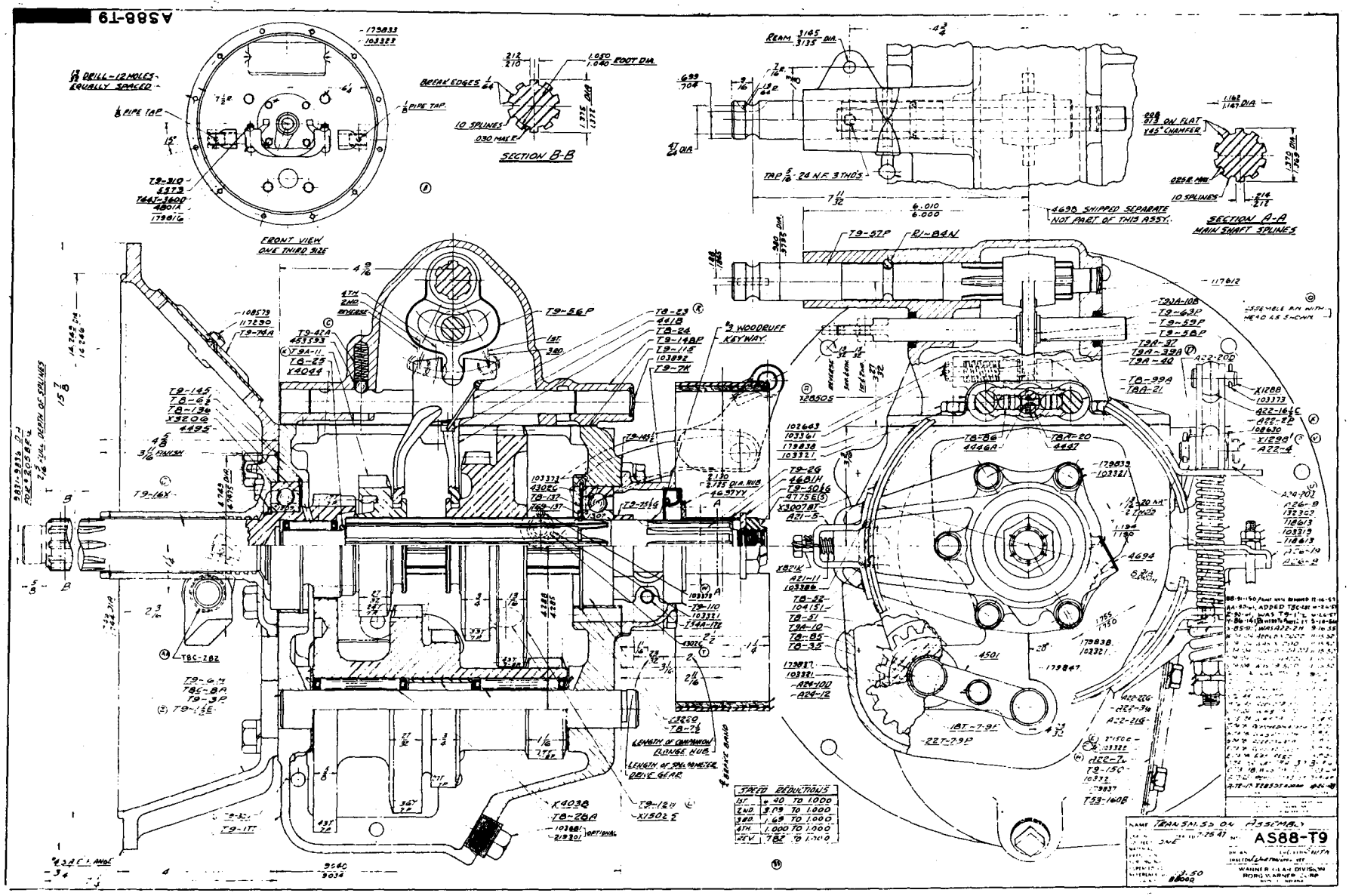

NO. AS88-T9 TRANSMISSION ASSEMBLY

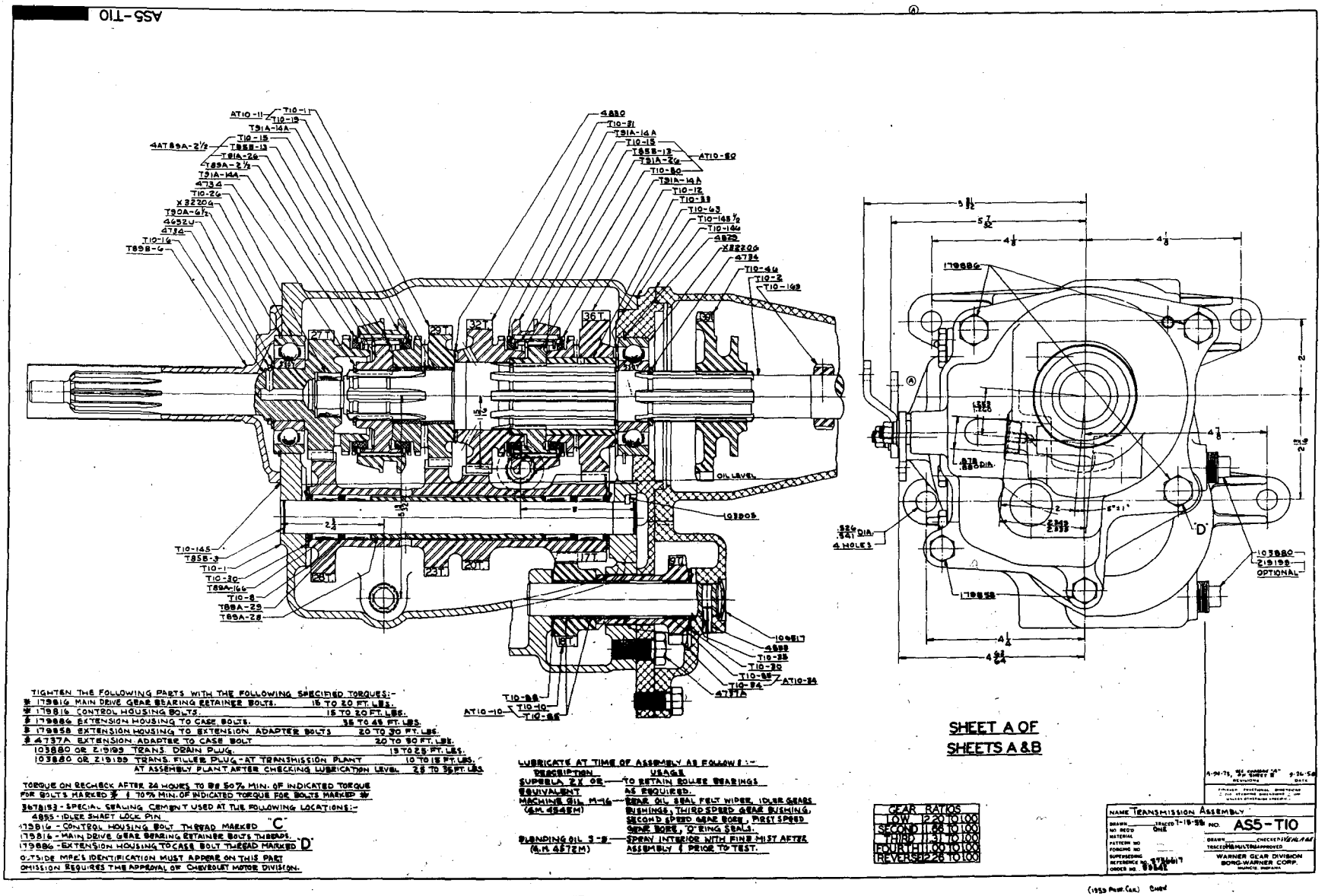

NO. AS5-T10 TRANSMISSION ASSEMBLY

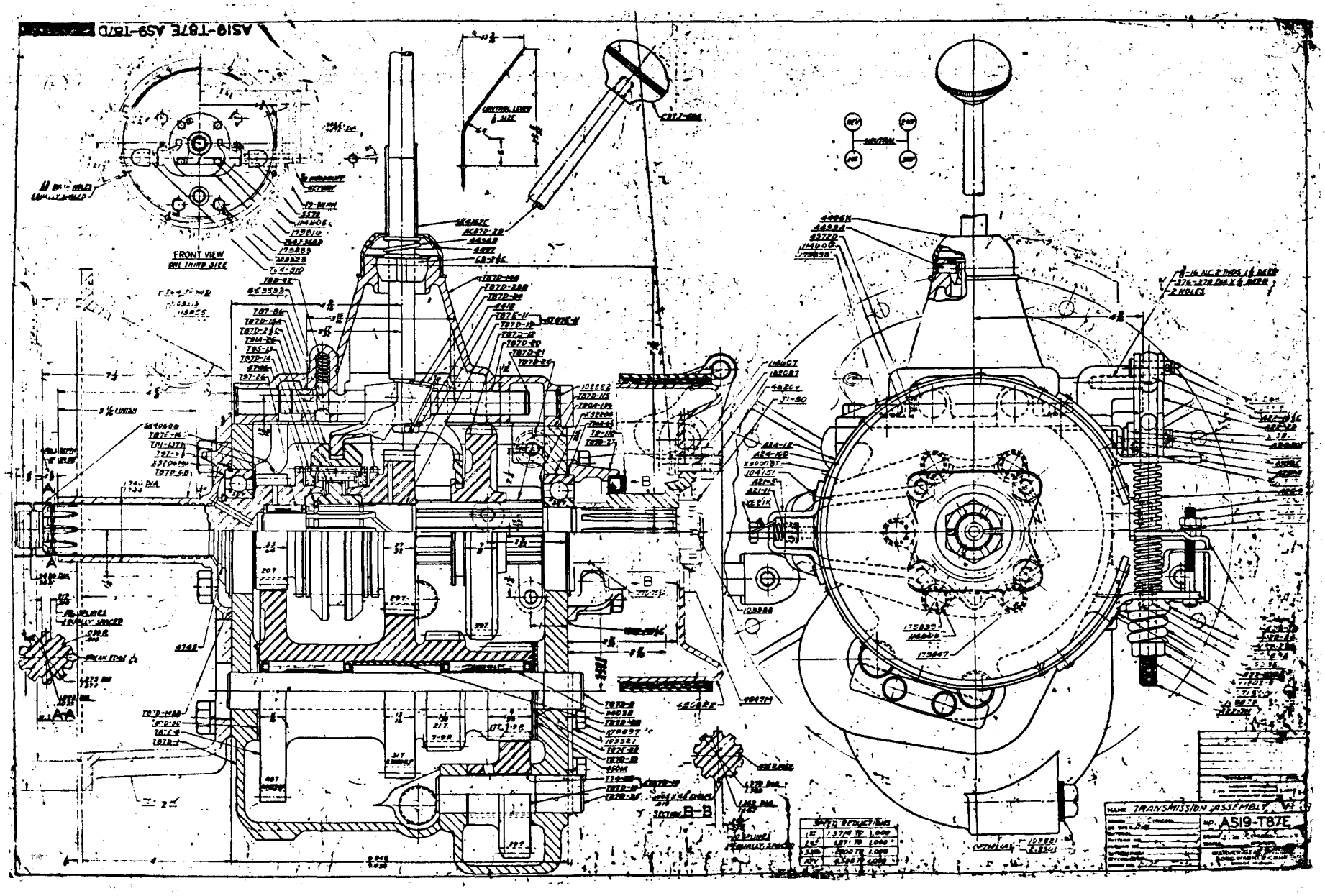

NO. AS19-T87E TRANSMISSION ASSEMBLY

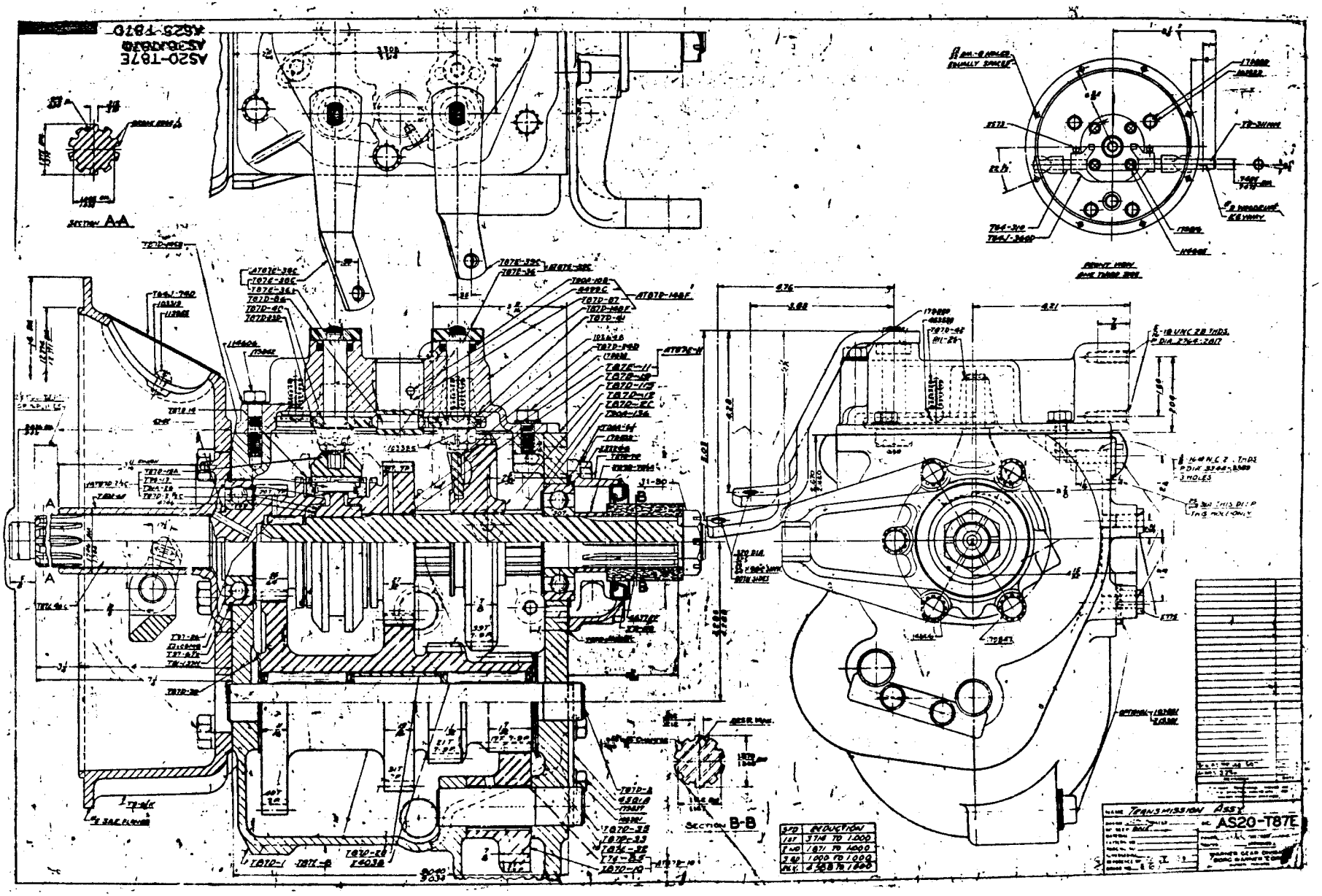

NO. AS20-T87E TRANSMISSION ASSEMBLY

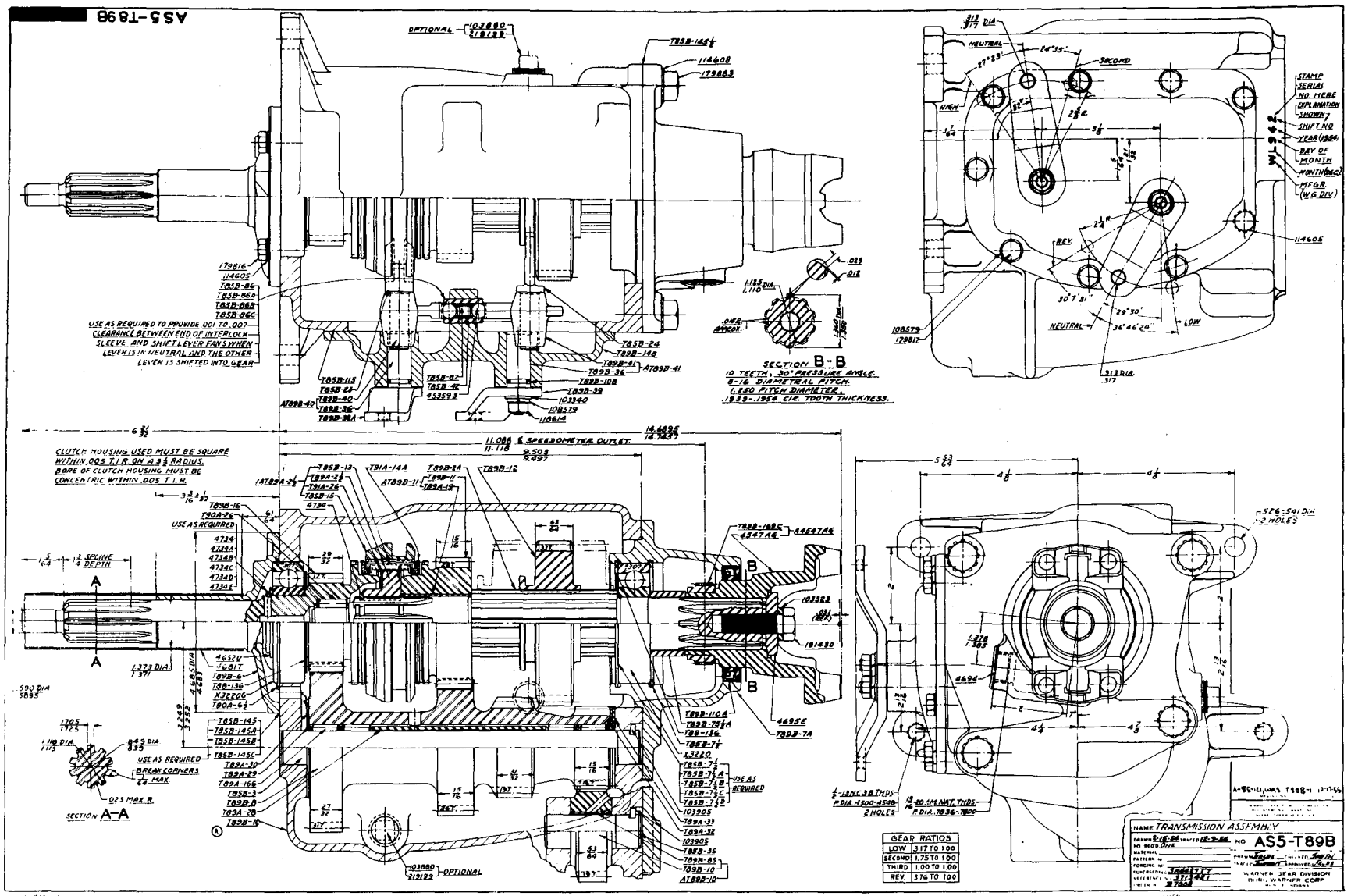

NO. AS5-T89B TRANSMISSION ASSEMBLY

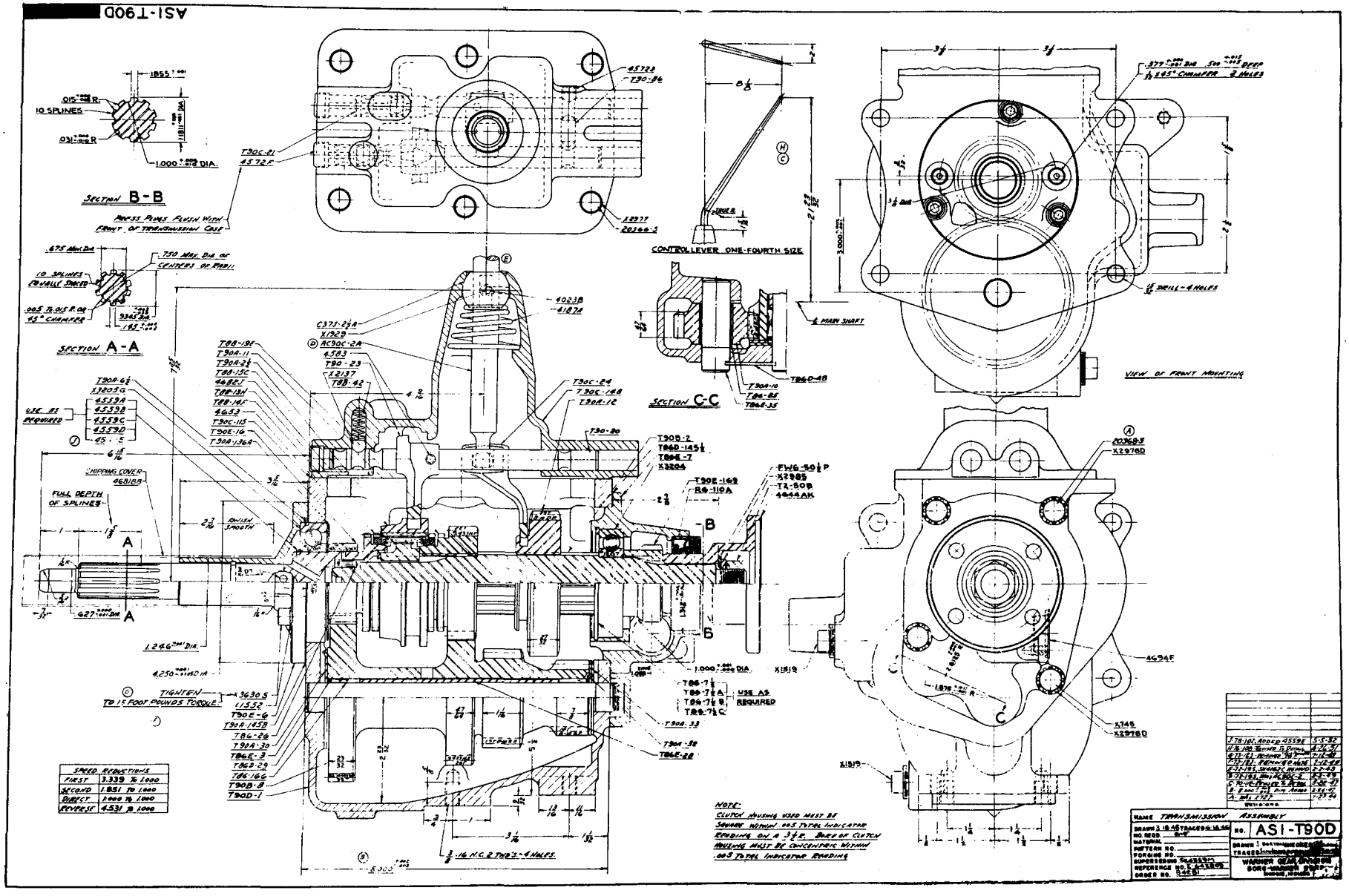

NO. ASI-T90D TRANSMISSION ASSEMBLY

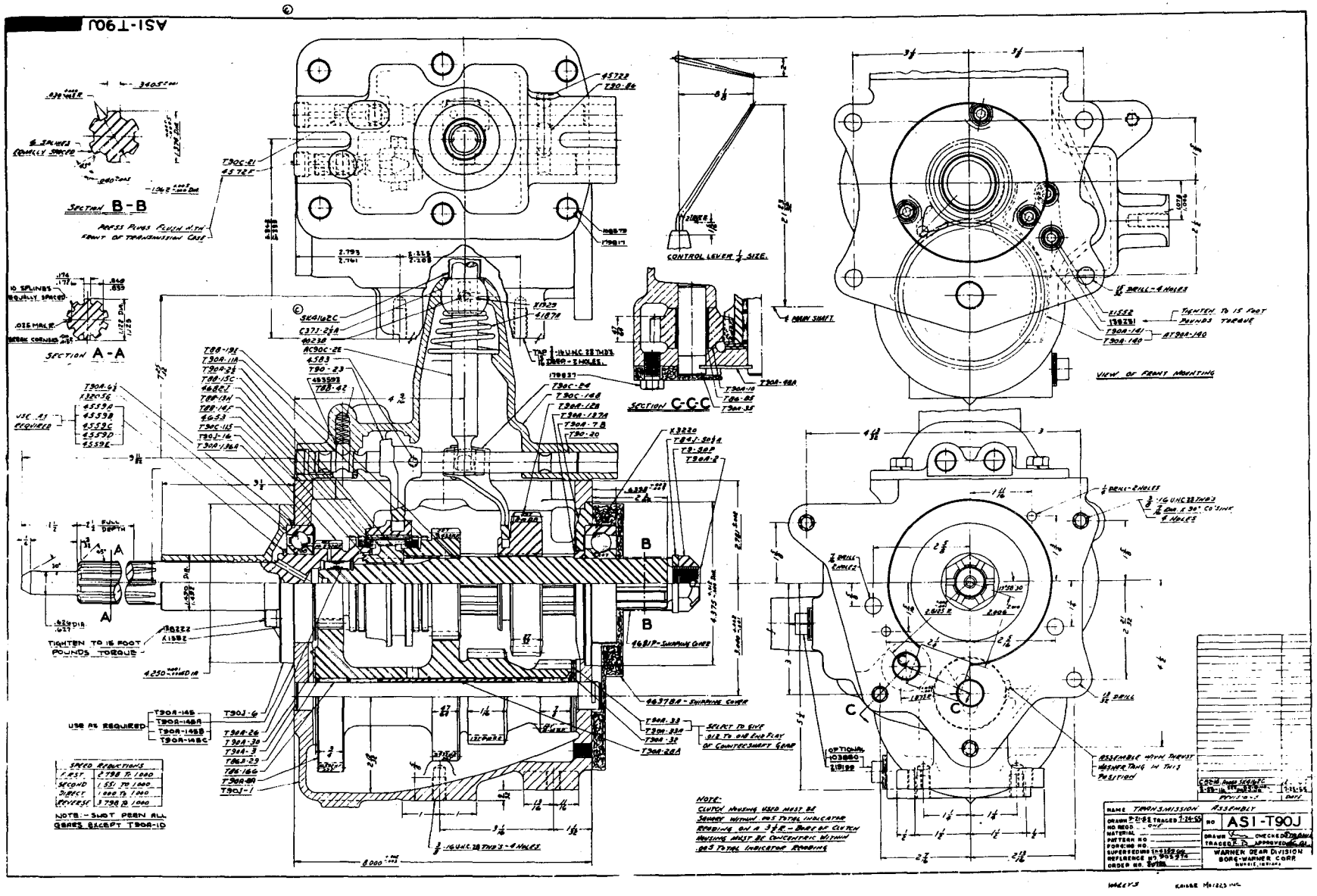

NO. ASI-T90J TRANSMISSION ASSEMBLY

PART AS3-T92

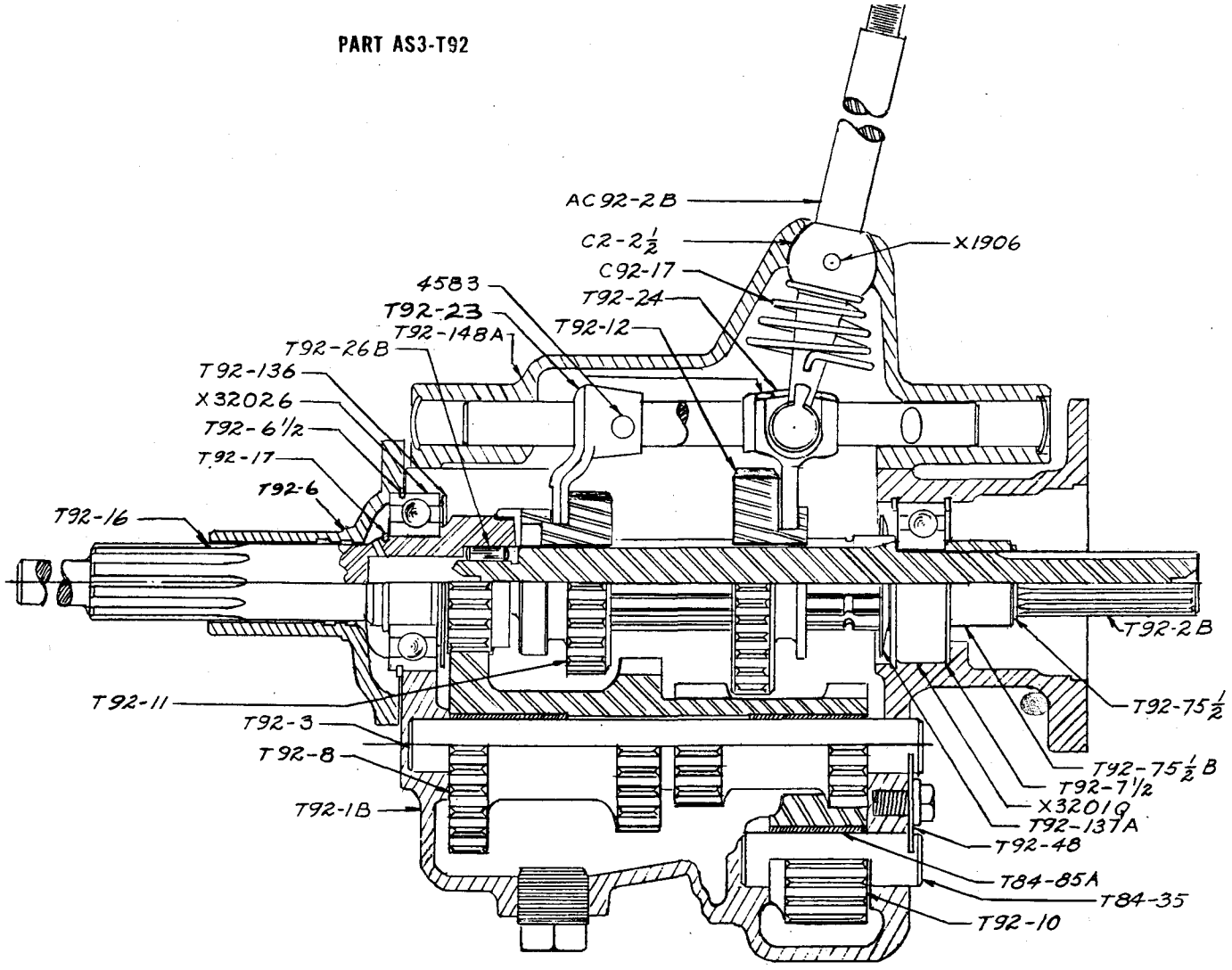

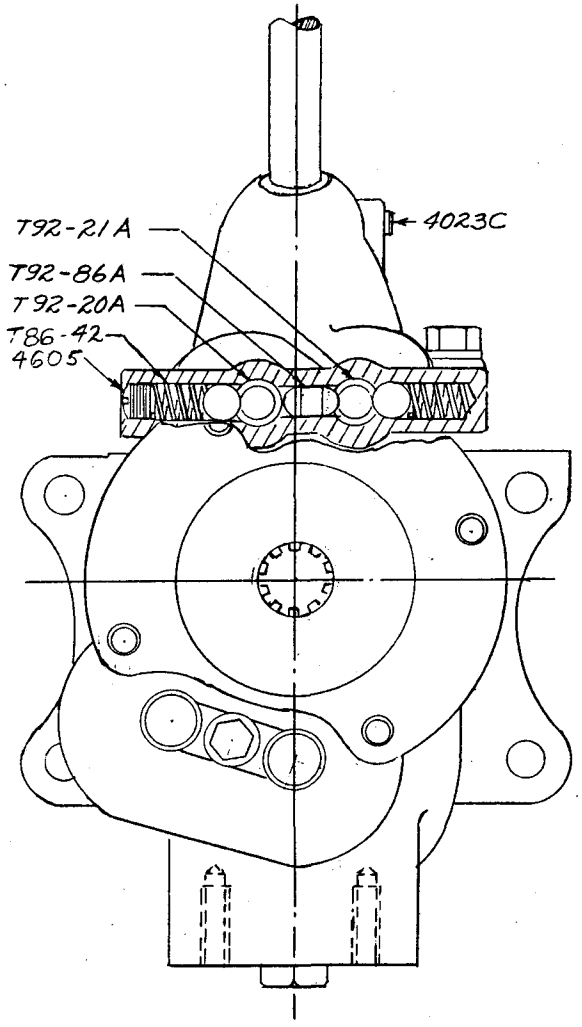

WARNER GEAR DIVISION

BORG-WARNER CORPORATION

1106 E. SEYMOUR ST.

MUNCIE, INDIANA

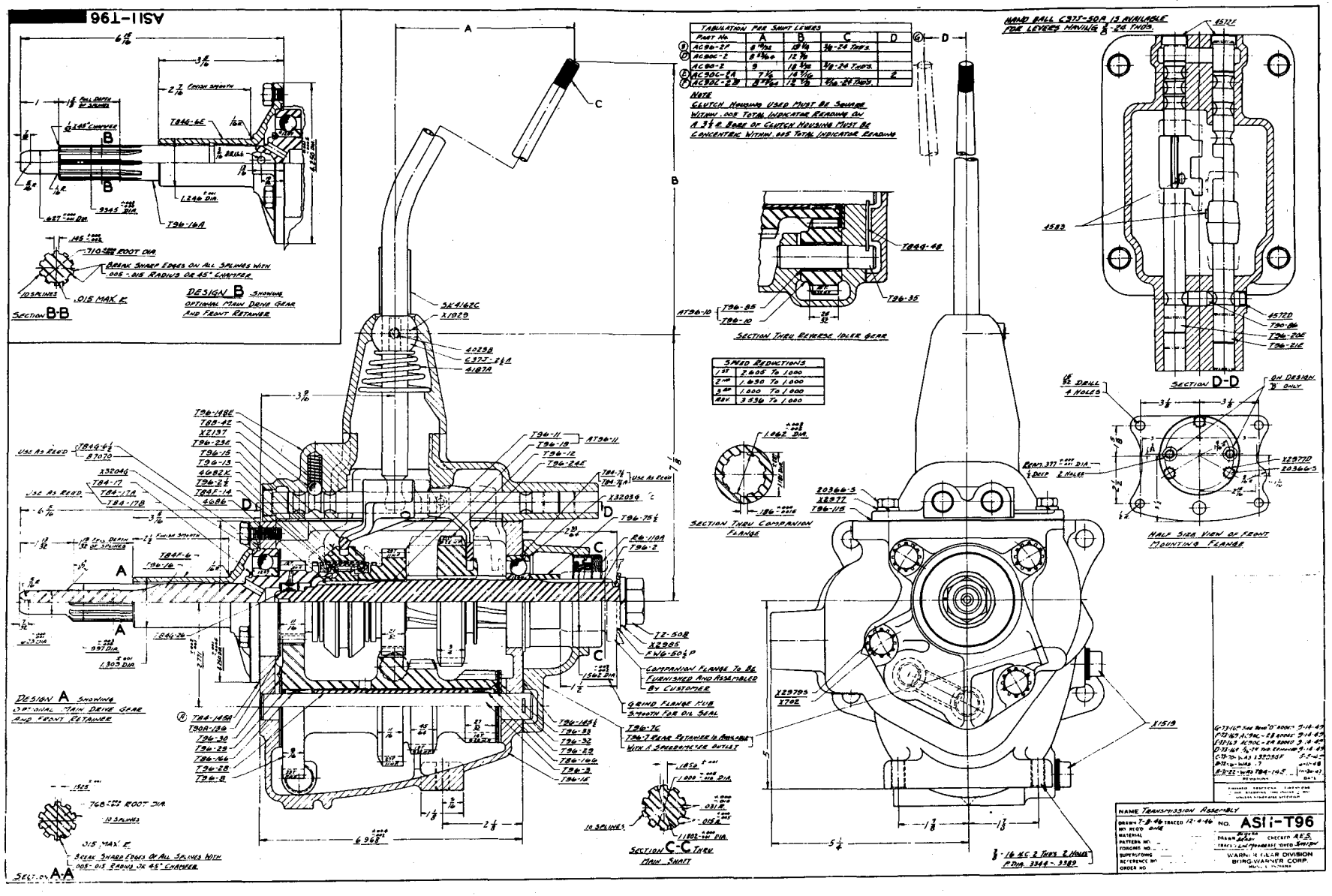

NO. ASII-T96 TRANSMISSION ASSEMBLY

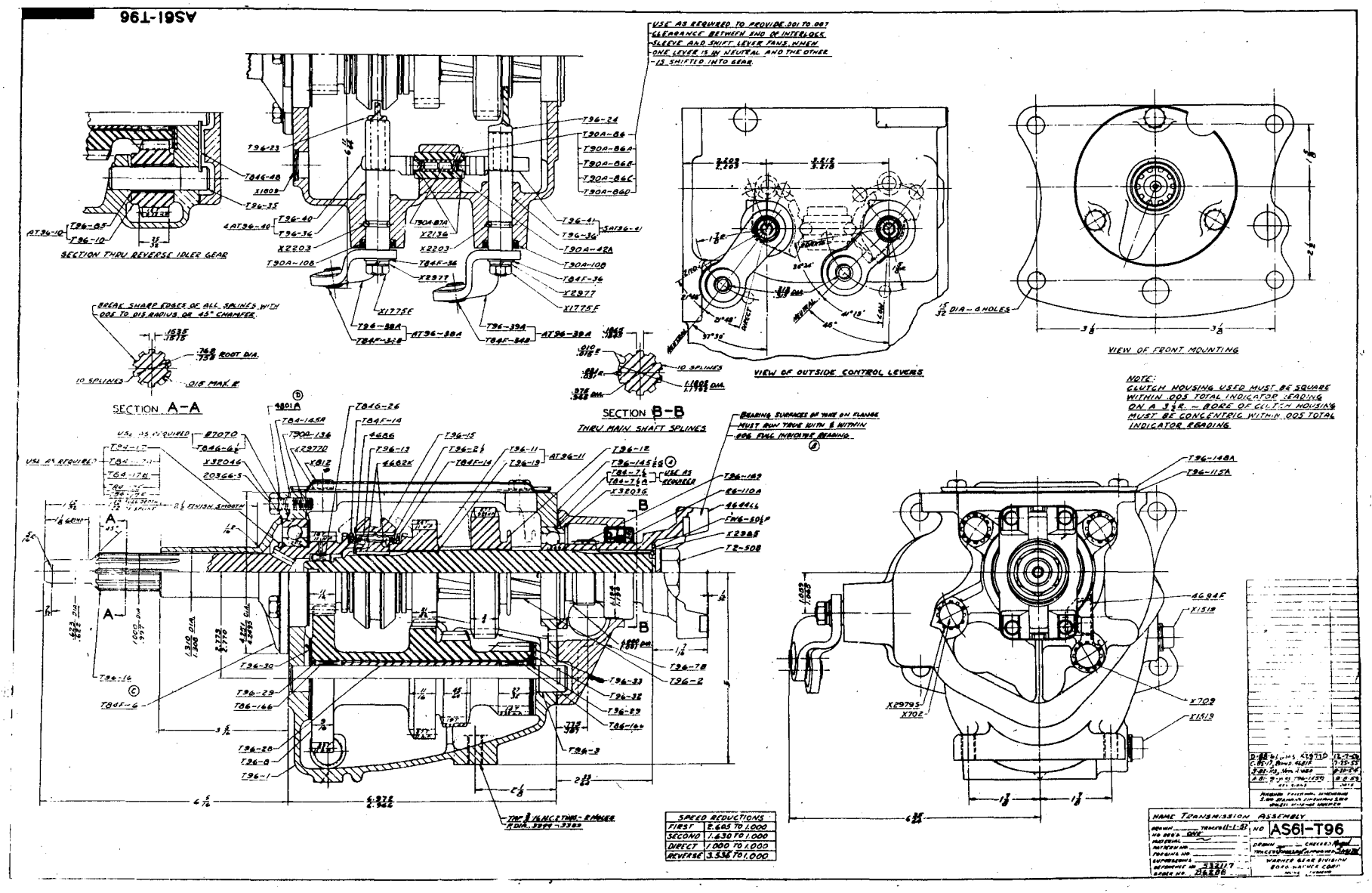

NO. AS61-T96 TRANSMISSION ASSEMBLY

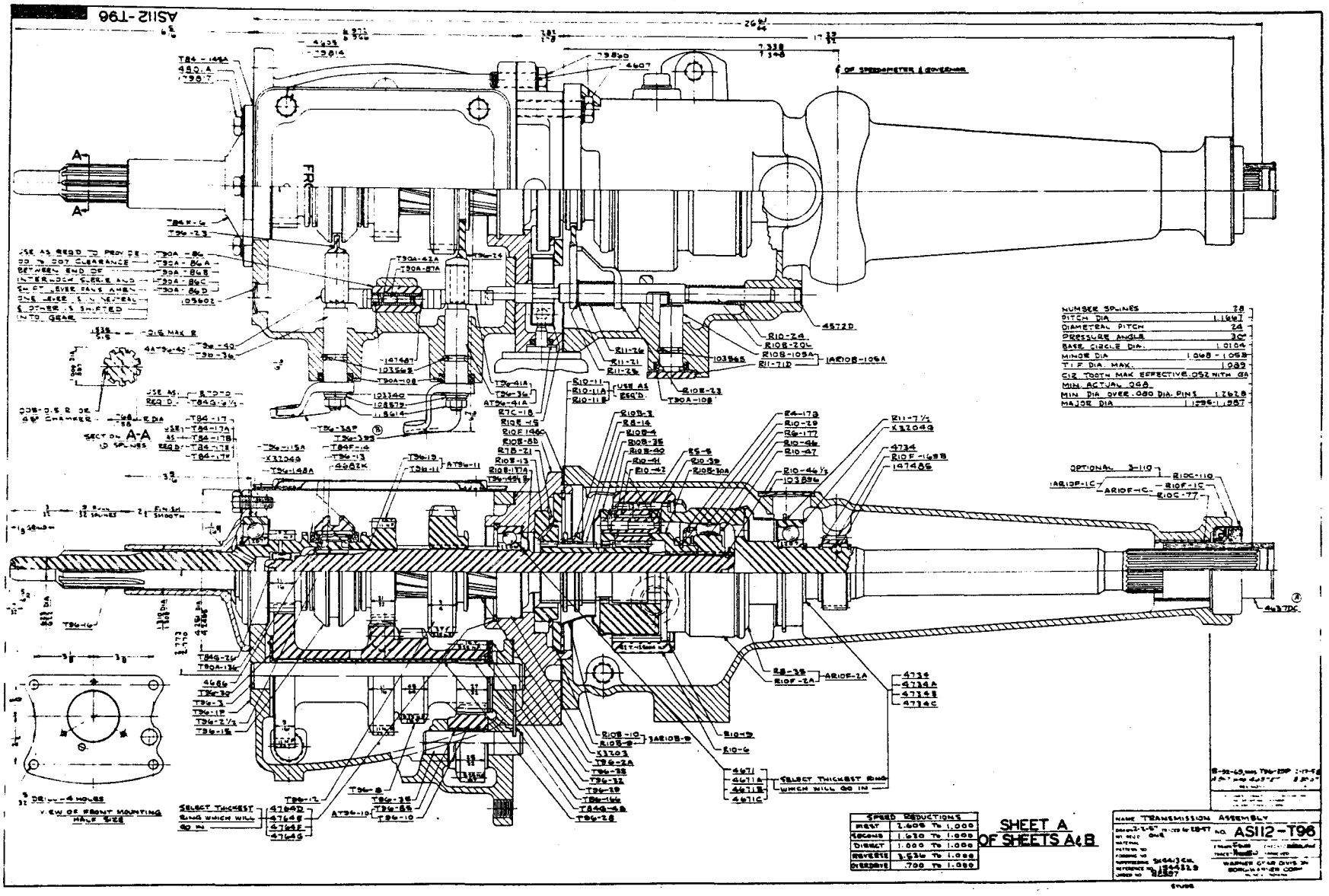

NO. AS112-T96 TRANSMISSION ASSEMBLY

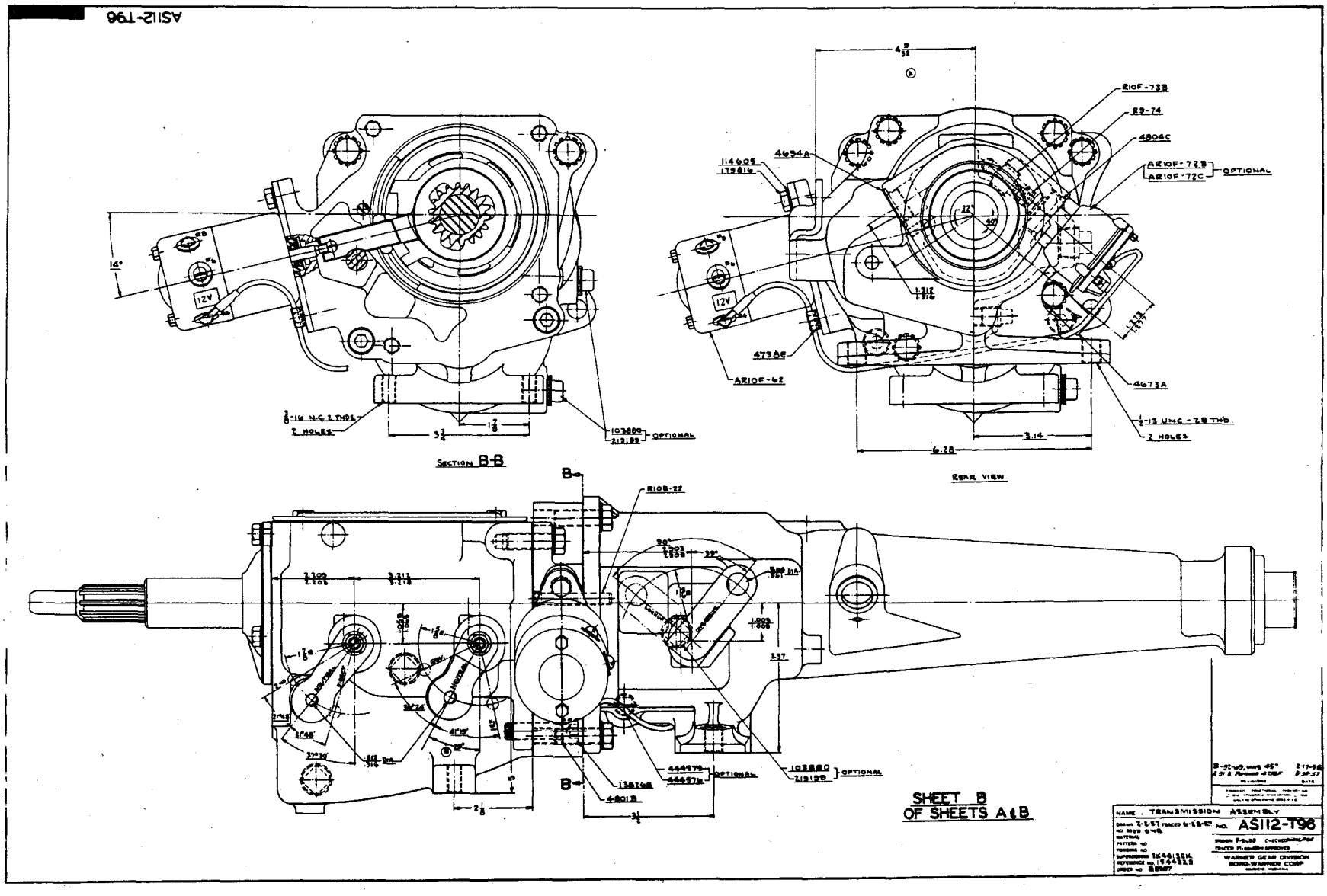

NO. AS112-T96 TRANSMISSION ASSEMBLY

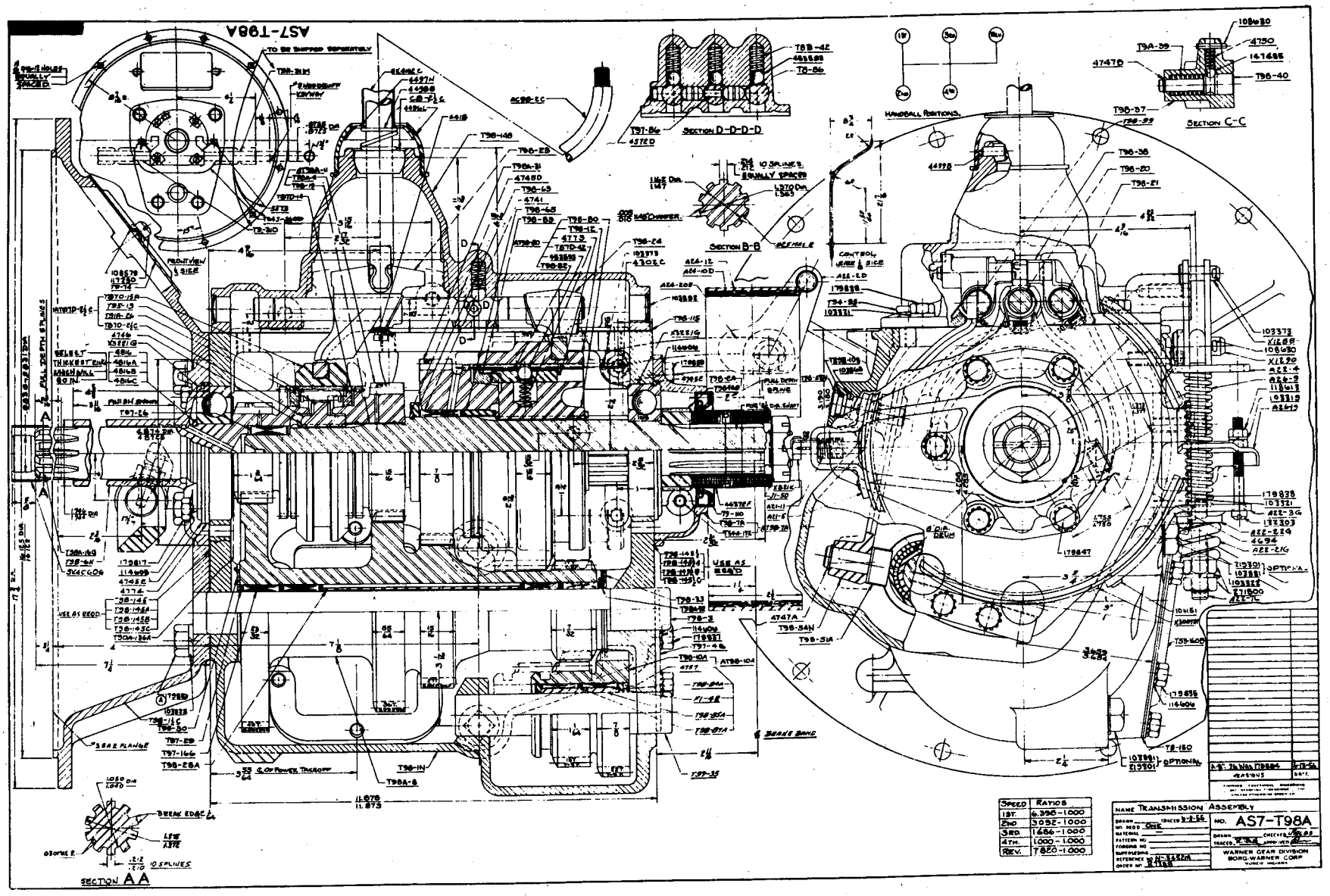

NO. AS7-T98A TRANSMISSION ASSEMBLY

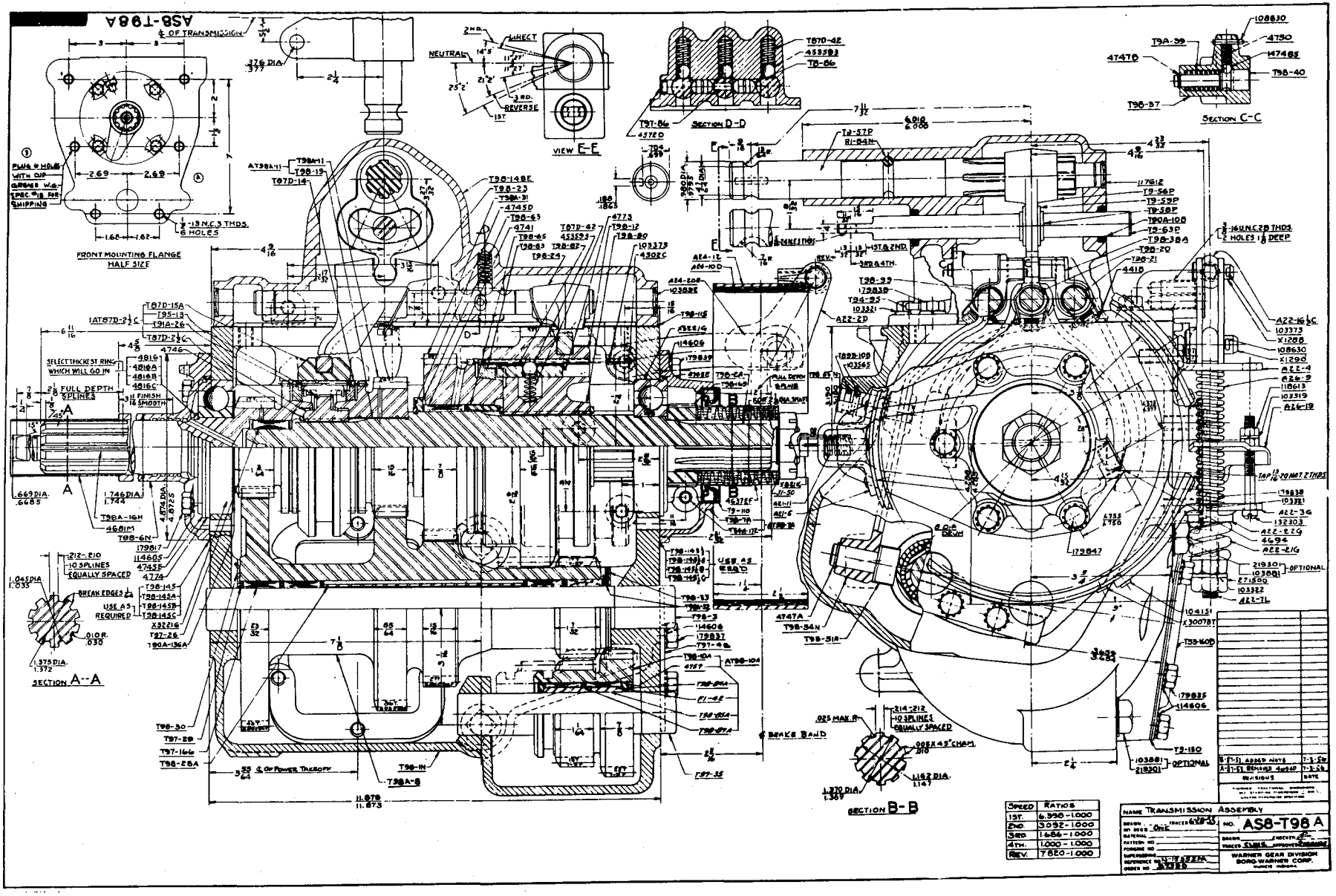

NO. AS8-T98A TRANSMISSION ASSEMBLY

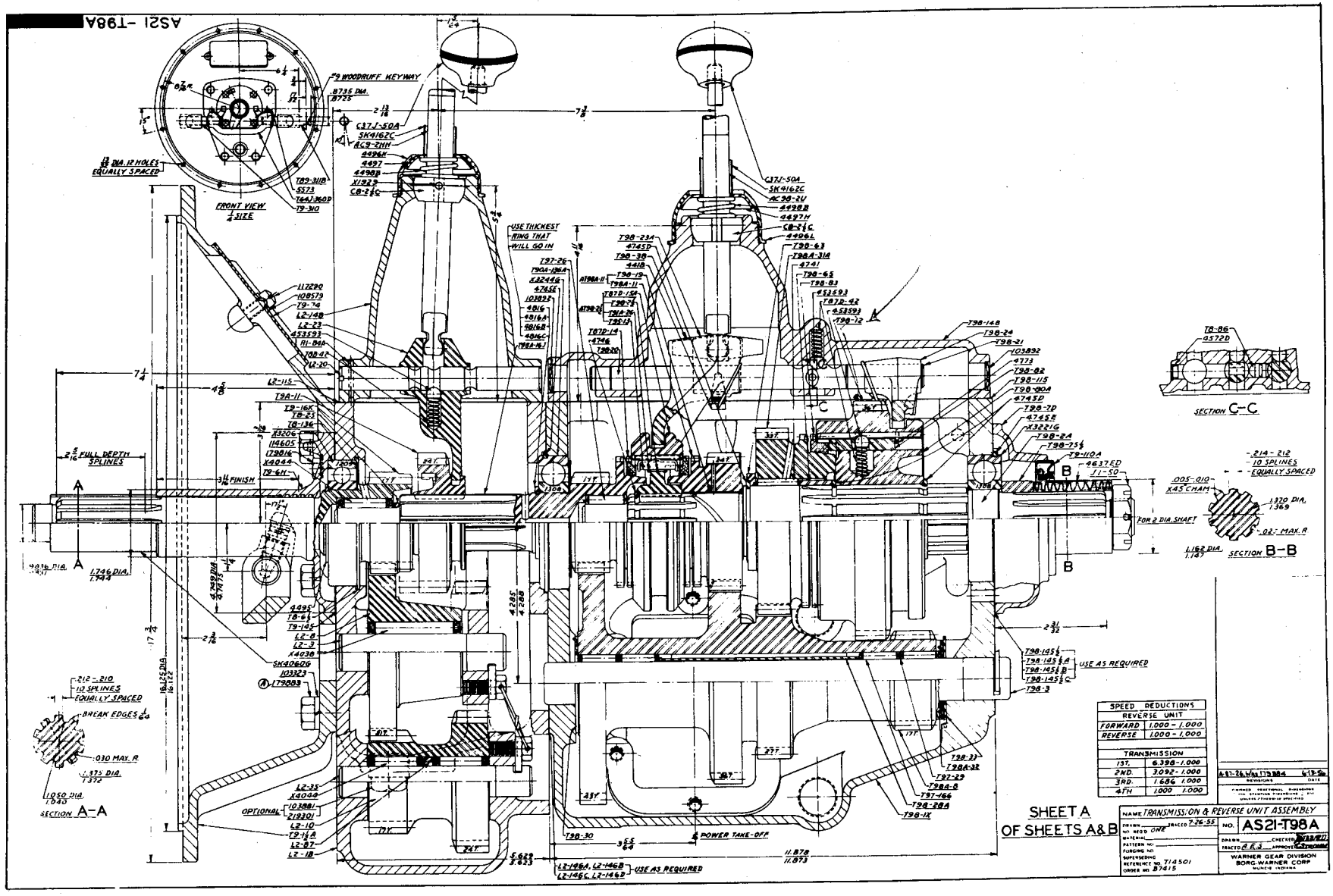

NO. AS21-T98A TRANSMISSION & REVERSE UNIT ASSEMBLY

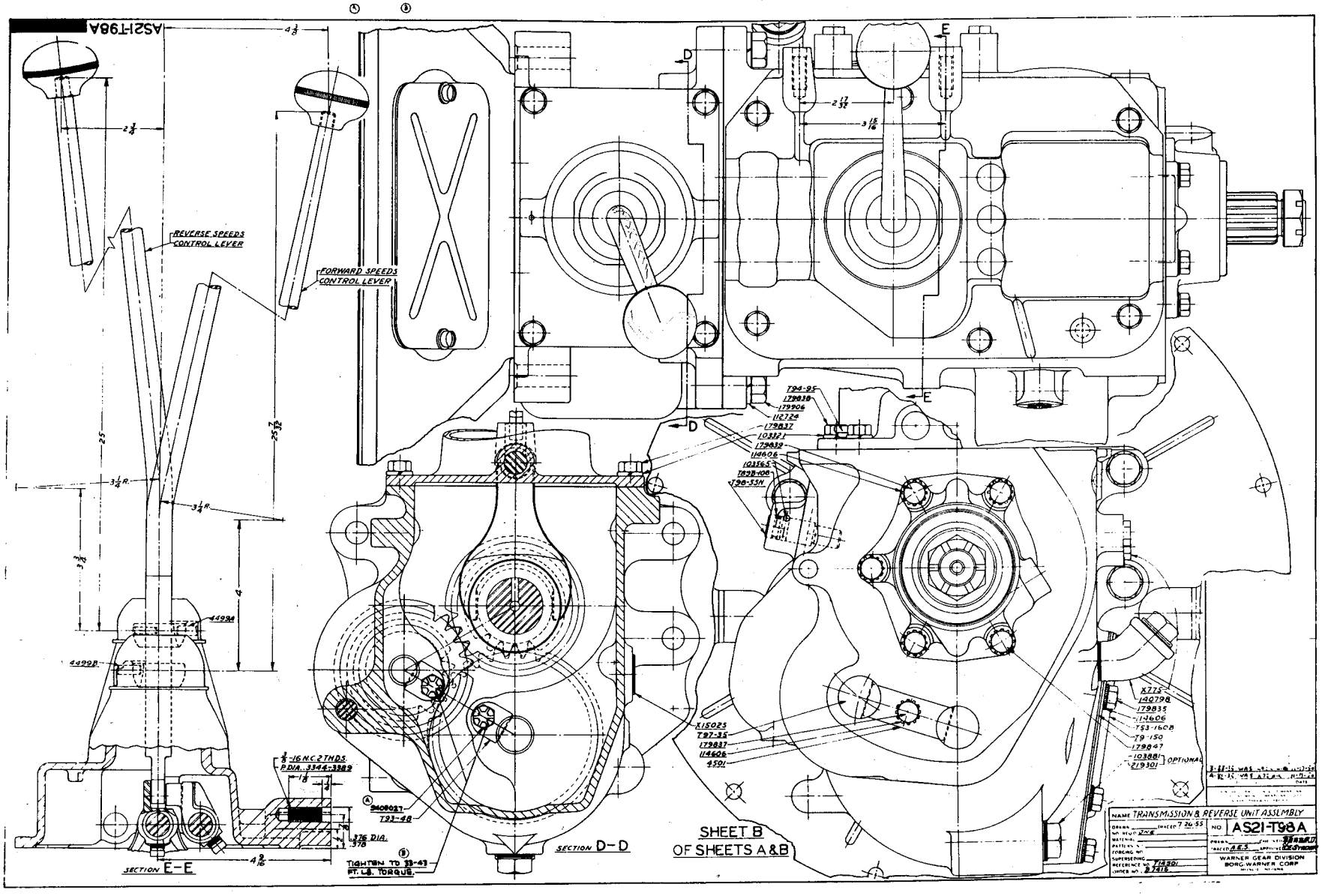

NO. AS21-T98A TRANSMISSION & REVERSE UNIT ASSEMBLY

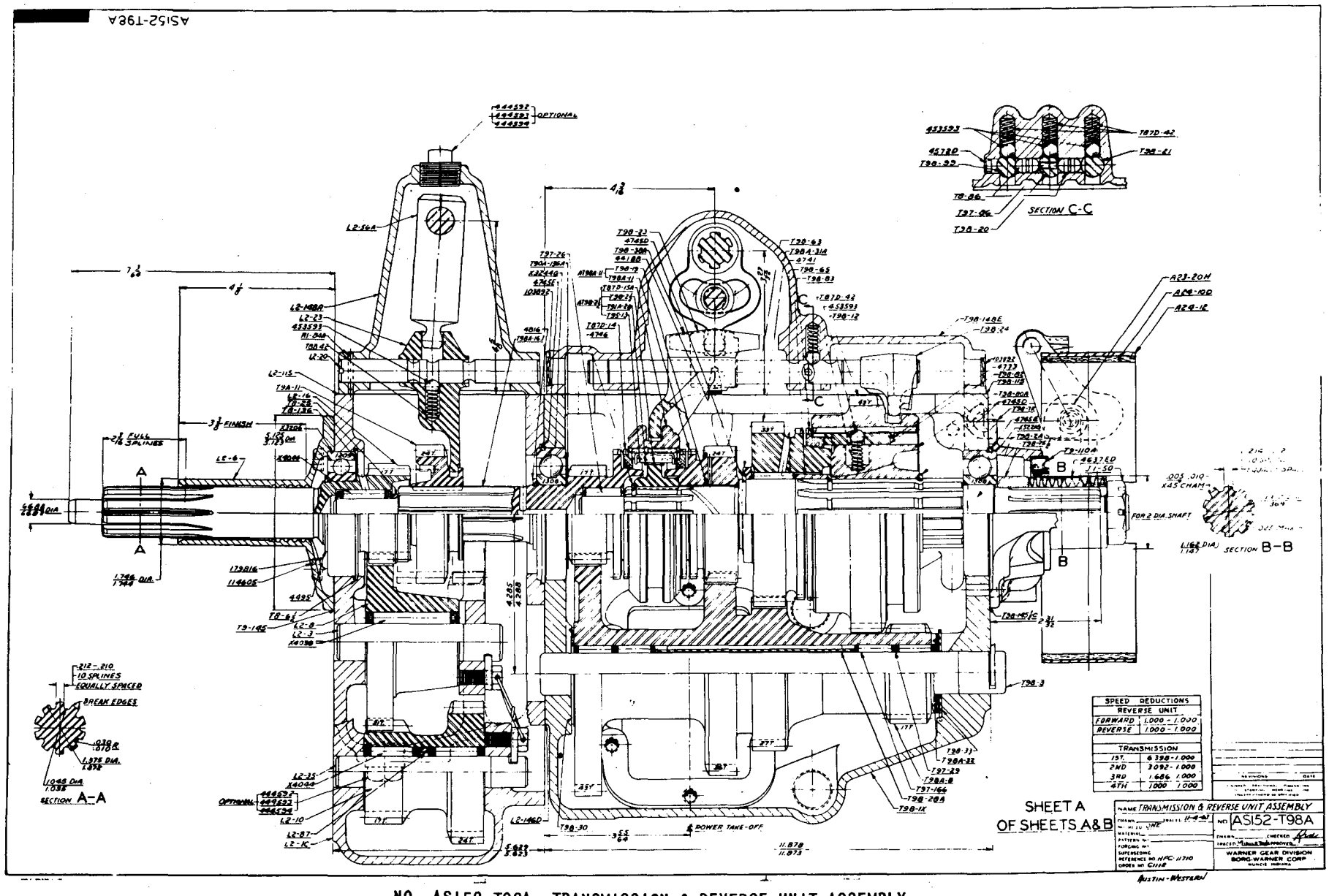

NO. AS152-T98A TRANSMISSION & REVERSE UNIT ASSEMBLY

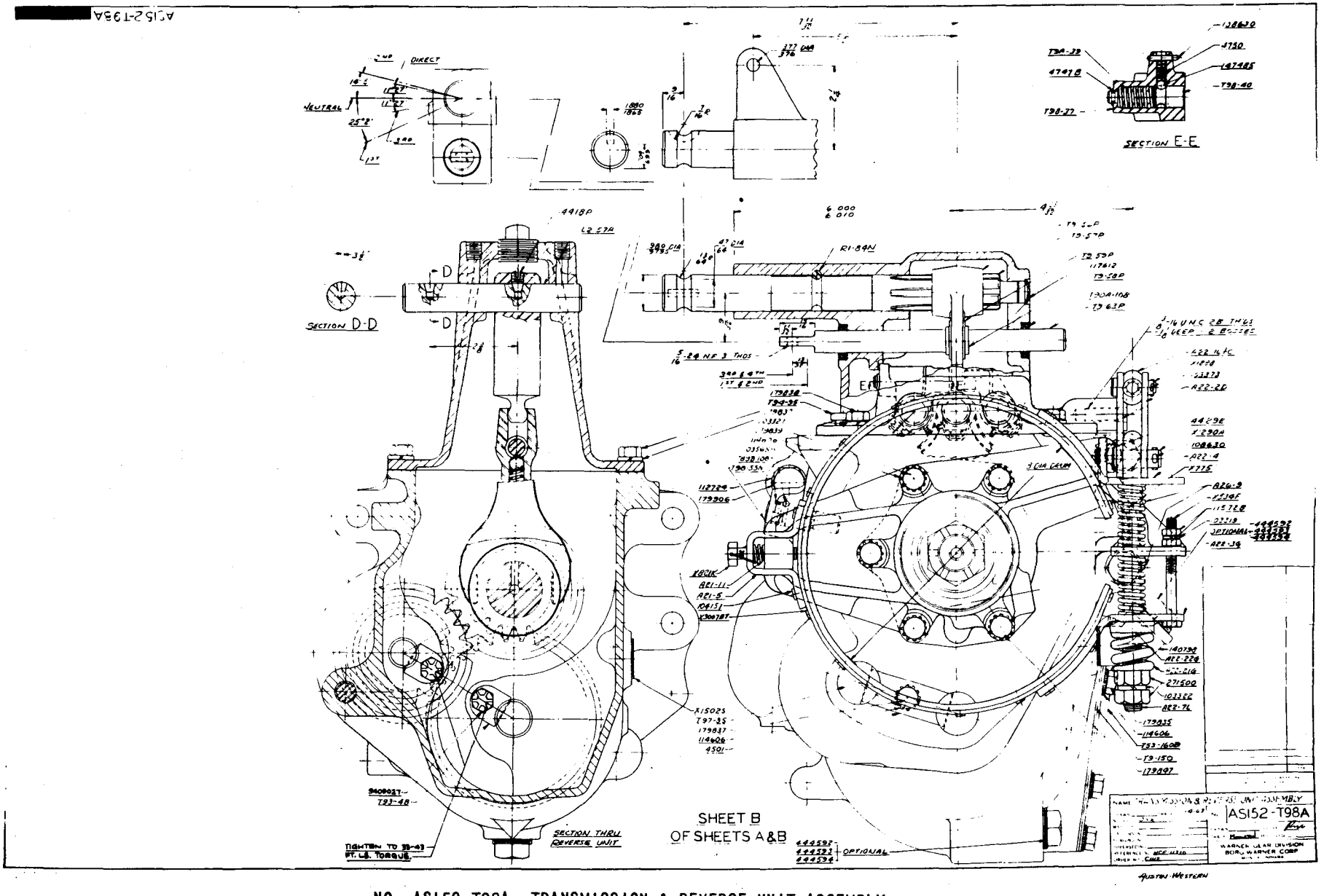

NO. AS152-T98A TRANSMISSION & REVERSE UNIT ASSEMBLY

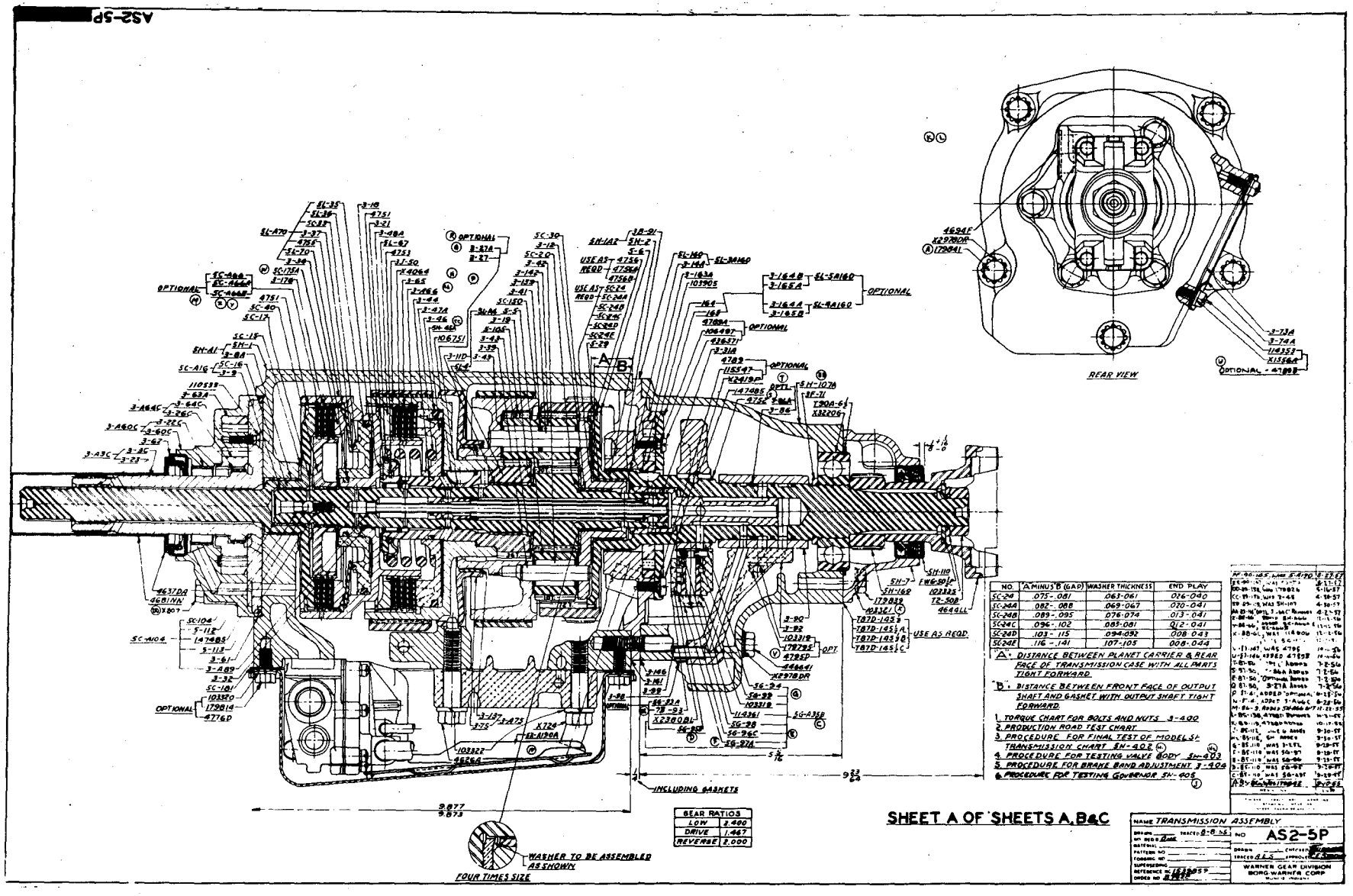

NO.	'A' MINUS 'B' (GAP)	WASHER THICKNESS	END PLAY
SC-24	.075-.081	.063-.061	.026-.040
SC-24A	.082-.088	.069-.067	.020-.041
SC-24B	.089-.095	.076-.074	.013-.041
SC-24C	.096-.102	.083-.081	.012-.041
SC-24D	.103-.115	.094-.092	.008-.043
SC-24E	.116-.141	.107-.105	.008-.043

'A' DISTANCE BETWEEN PLANET CARRIER & REAR FACE OF TRANSMISSION CASE WITH ALL PARTS TIGHT FORWARD.

'B' DISTANCE BETWEEN FRONT FACE OF OUTPUT SHAFT AND GASKET WITH OUTPUT SHAFT TIGHT FORWARD.

1. TORQUE CHART FOR BOLTS AND NUTS 3-400
2. PRODUCTION ROAD TEST CHART
3. PROCEDURE FOR FINAL TEST OF MODEL S: TRANSMISSION CHART SH-402
4. PROCEDURE FOR TESTING VALVE BODY SH-403
5. PROCEDURE FOR BRAKE BAND ADJUSTMENT 3-404
6. PROCEDURE FOR TESTING GOVERNOR SH-405

GEAR RATIOS	
LOW	2.400
DRIVE	1.467
REVERSE	2.000

NO. AS2-5P TRANSMISSION ASSEMBLY

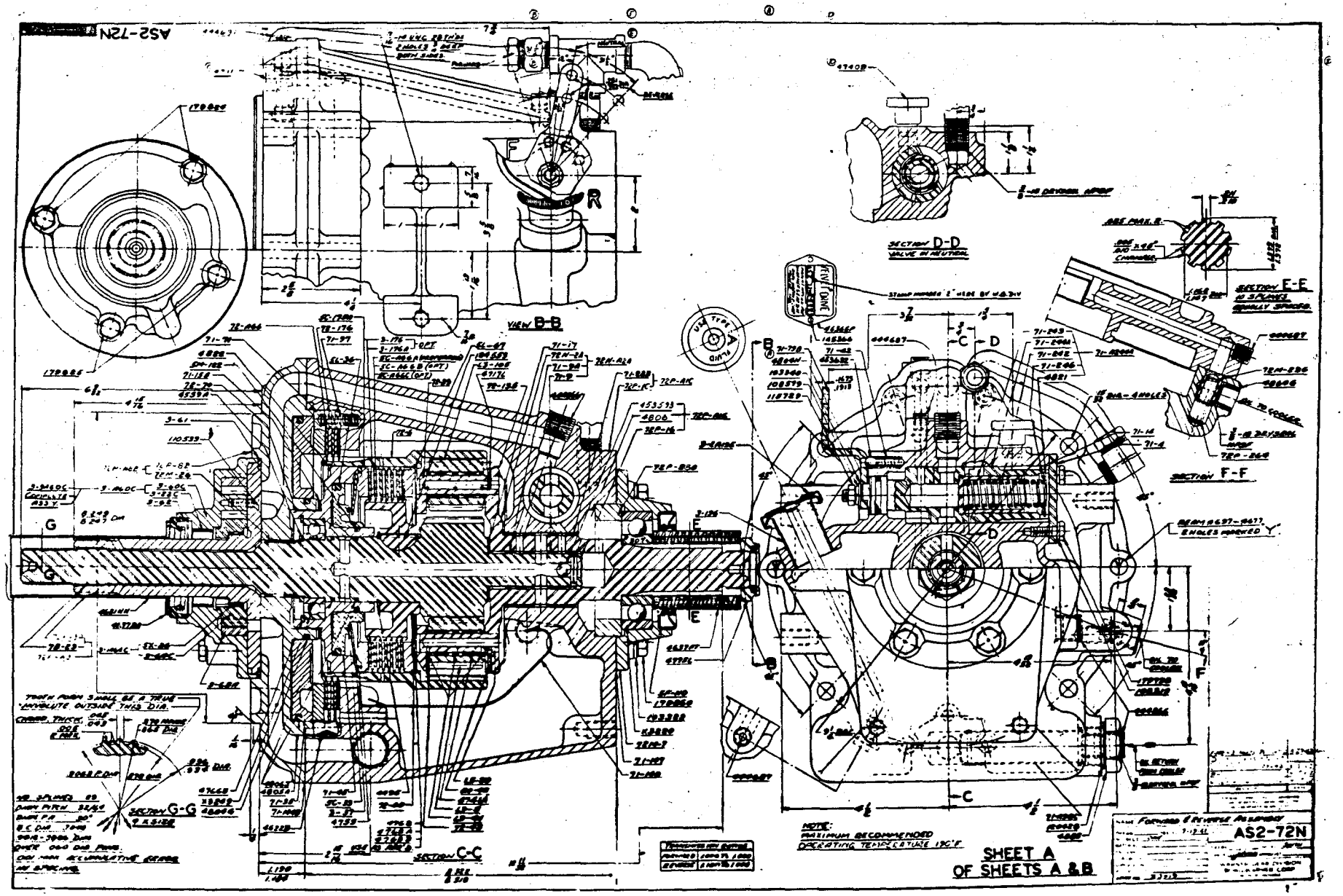

NO. AS2-72N FORWARD & REVERSE ASSEMBLY

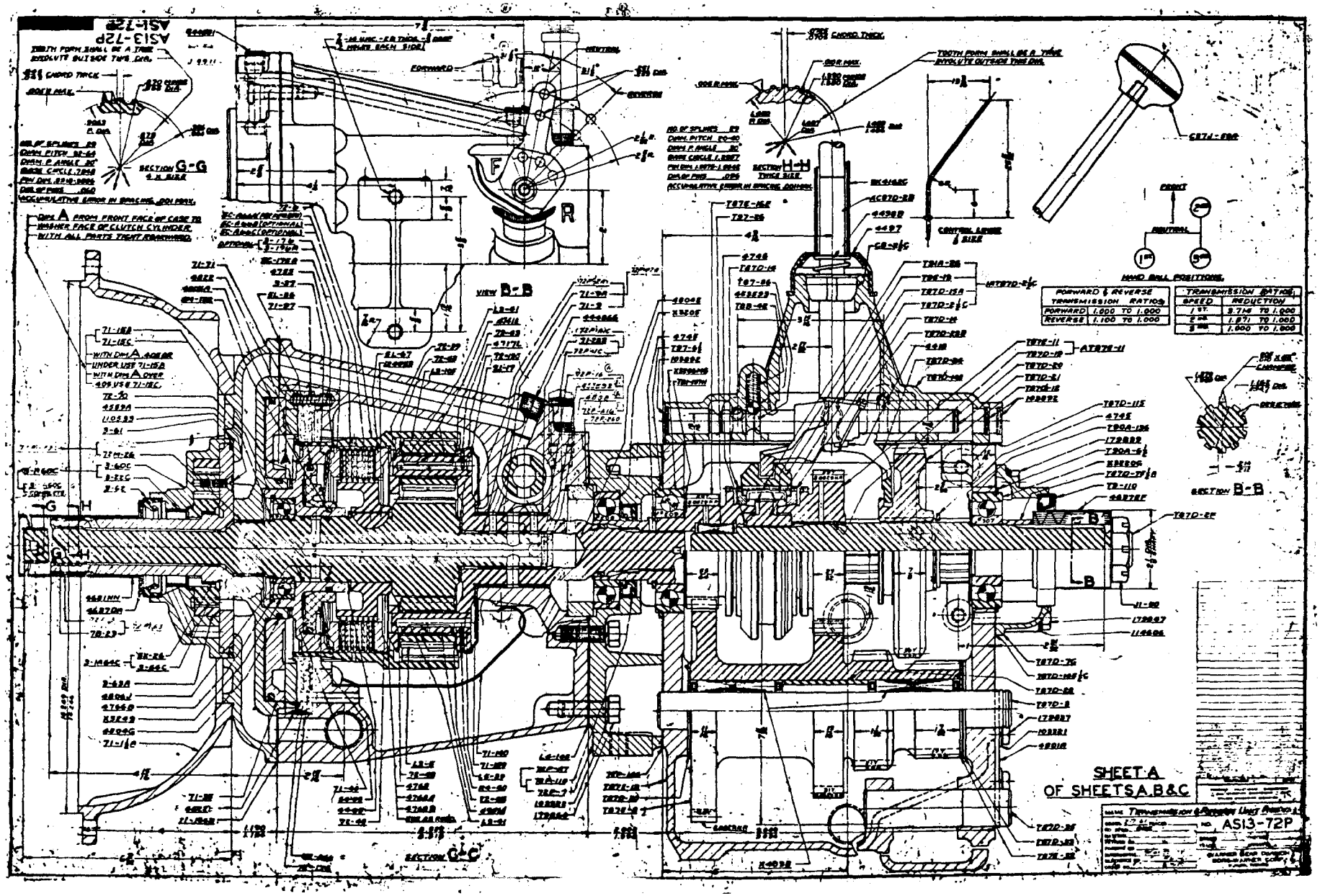

NO. AS13-72P TRANSMISSION & REVERSE UNIT ASSEMBLY

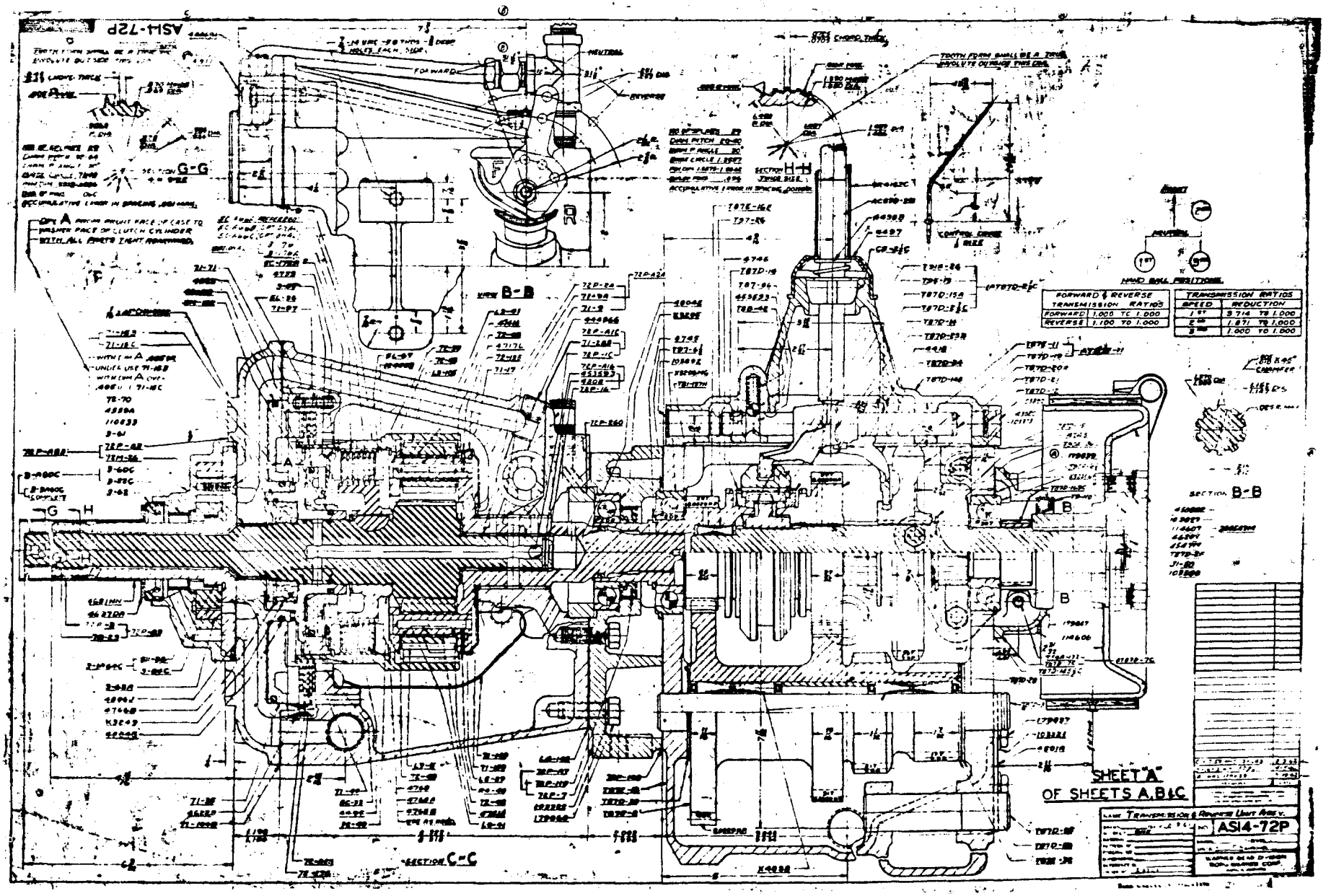

NO. ASI4-72P TRANSMISSION & REVERSE UNIT ASSEMBLY

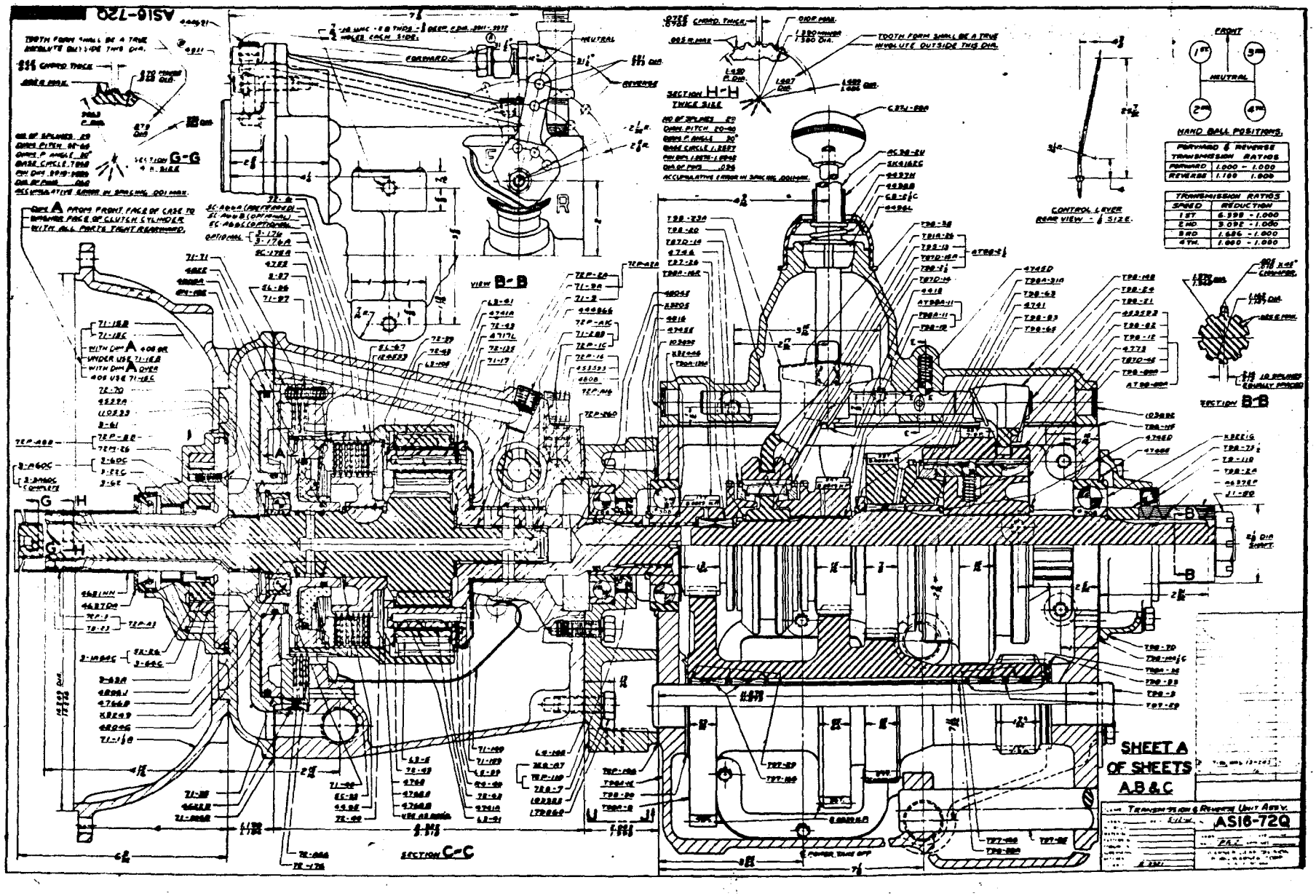

NO. AS16-72Q TRANSMISSION & REVERSE UNIT ASSEMBLY

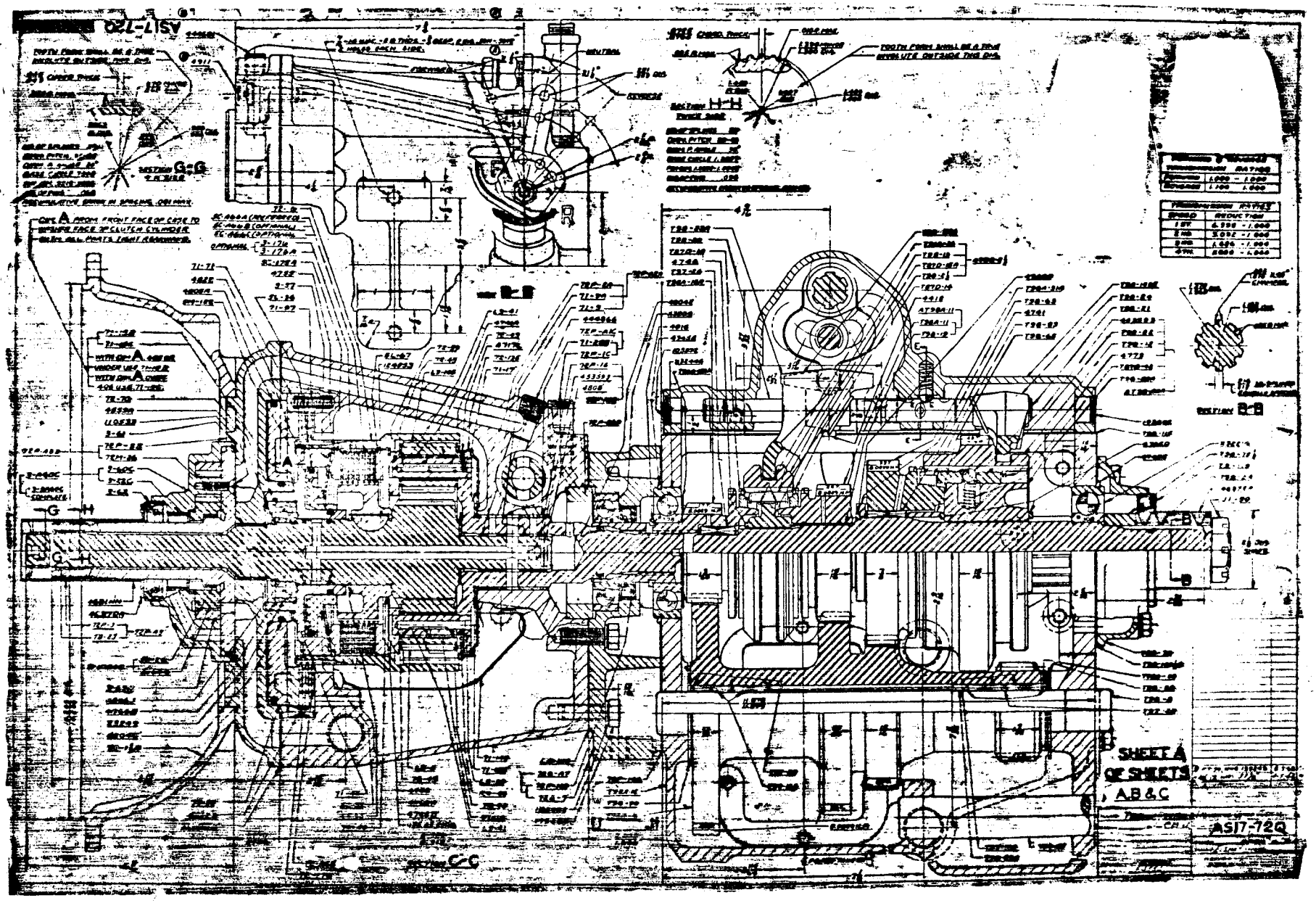

NO. AS17-72Q TRANSMISSION & REVERSE UNIT ASSEMBLY

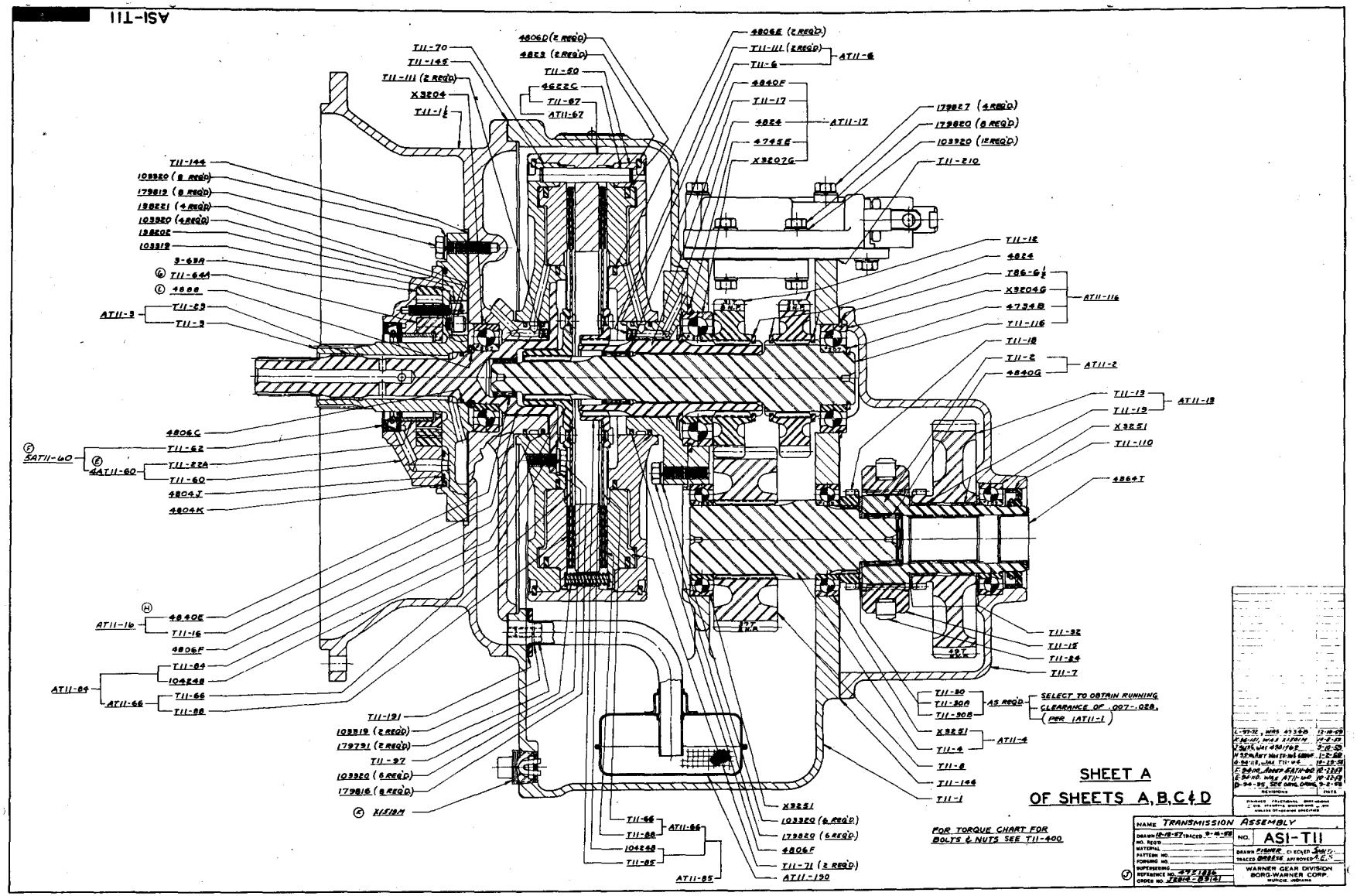

NO. TII TWO SPEED POWER SHIFT TRANSMISSION ASSEMBLY

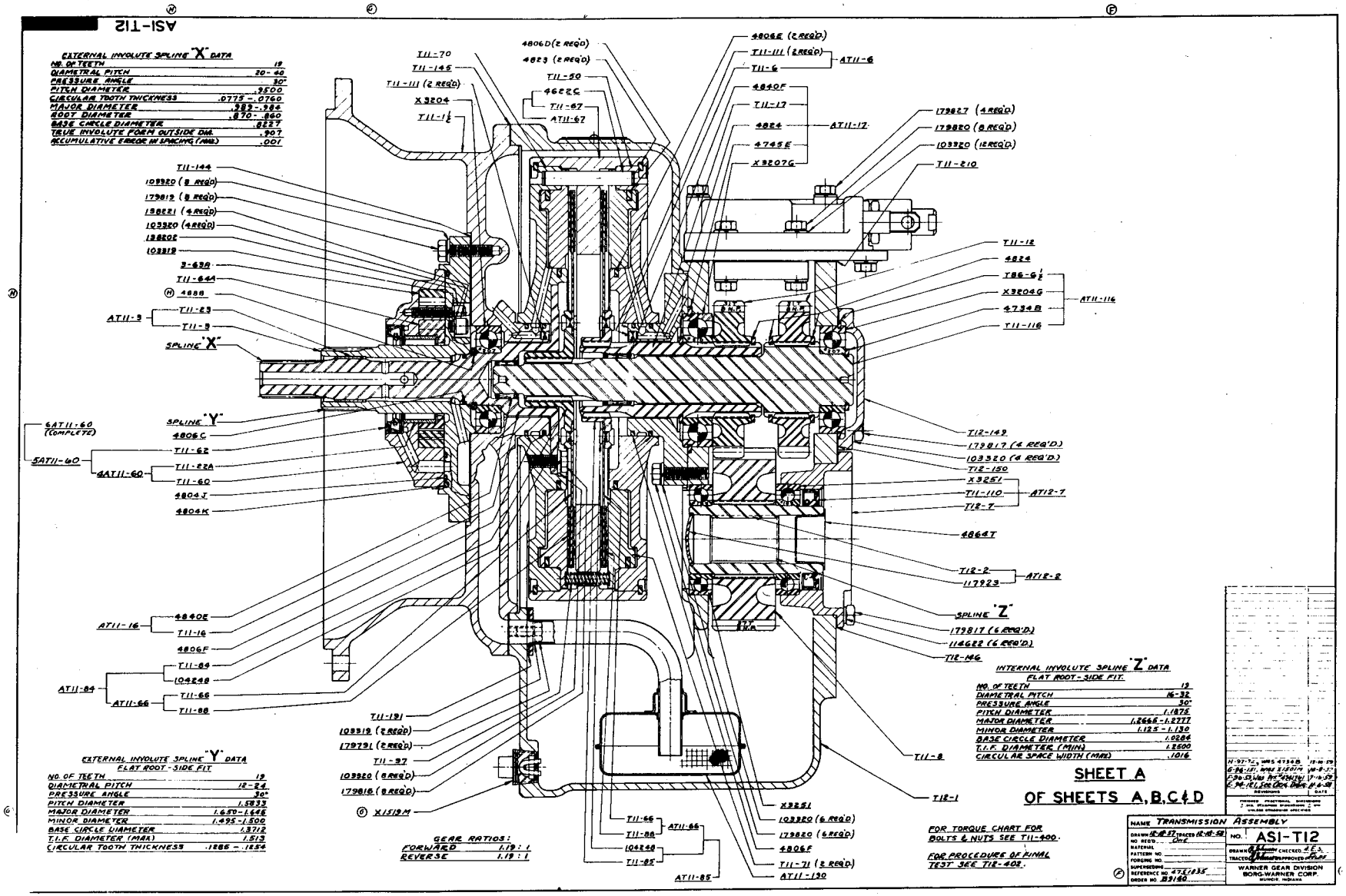

NO. T12 SINGLE SPEED POWER SHIFT TRANSMISSION ASSEMBLY

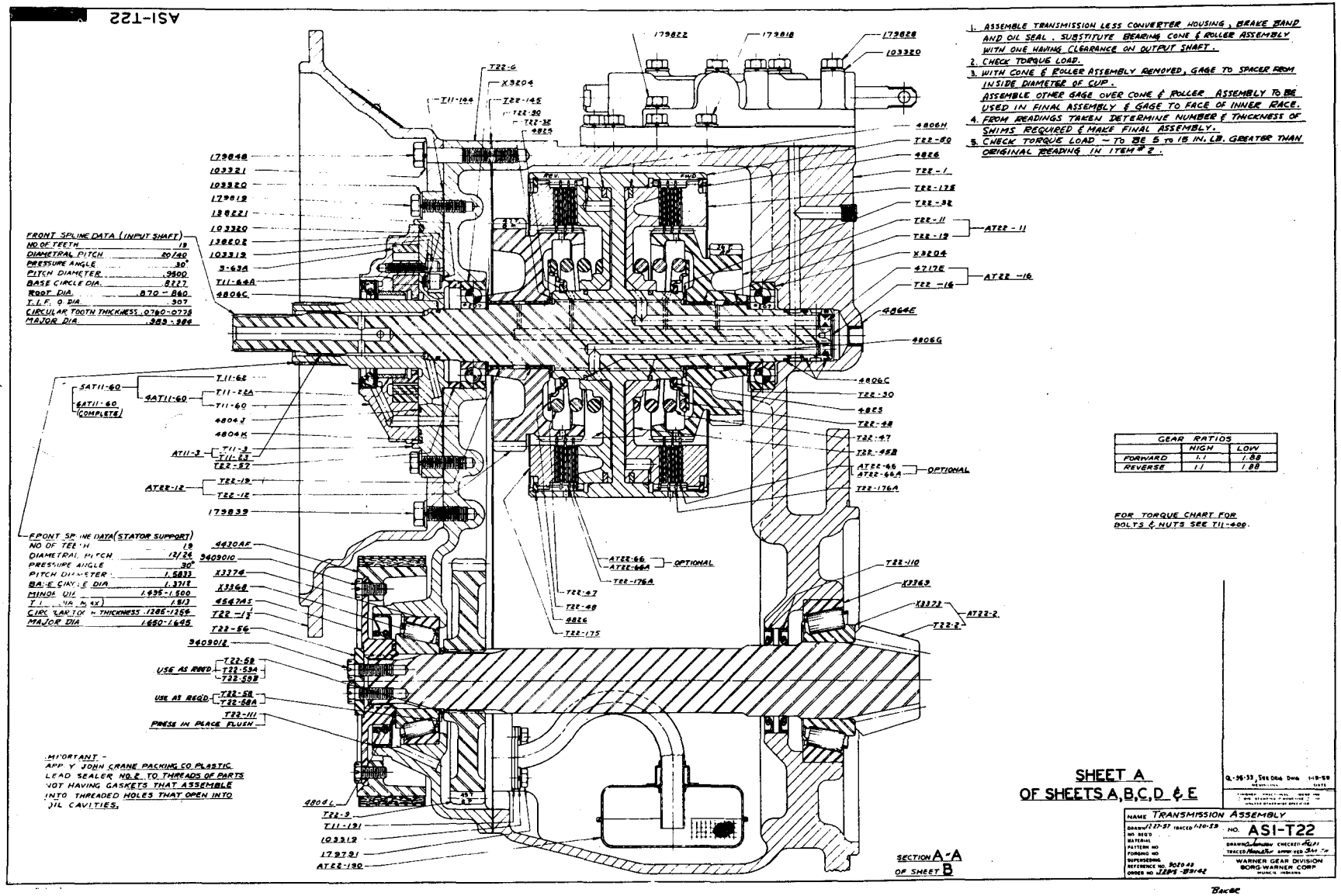

NO. T22 TWO SPEED POWER SHIFT TRANSMISSION ASSEMBLY

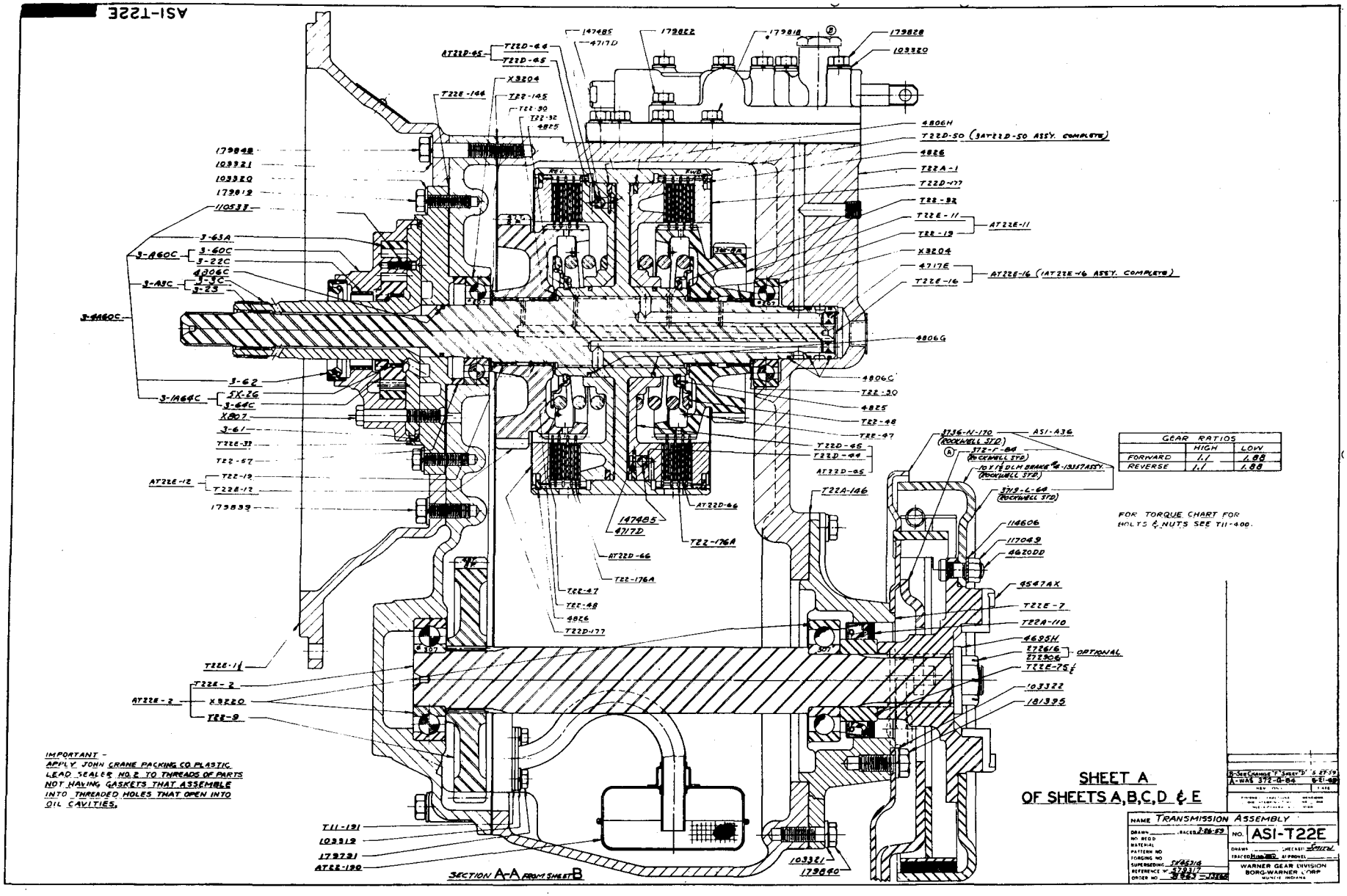

NO. T22E TWO SPEED POWER SHIFT TRANSMISSION ASSEMBLY