CATALOG: SP-7706-1
DATE: SEPT./78

Rockwell

SL/SQHD PARTS BOOK

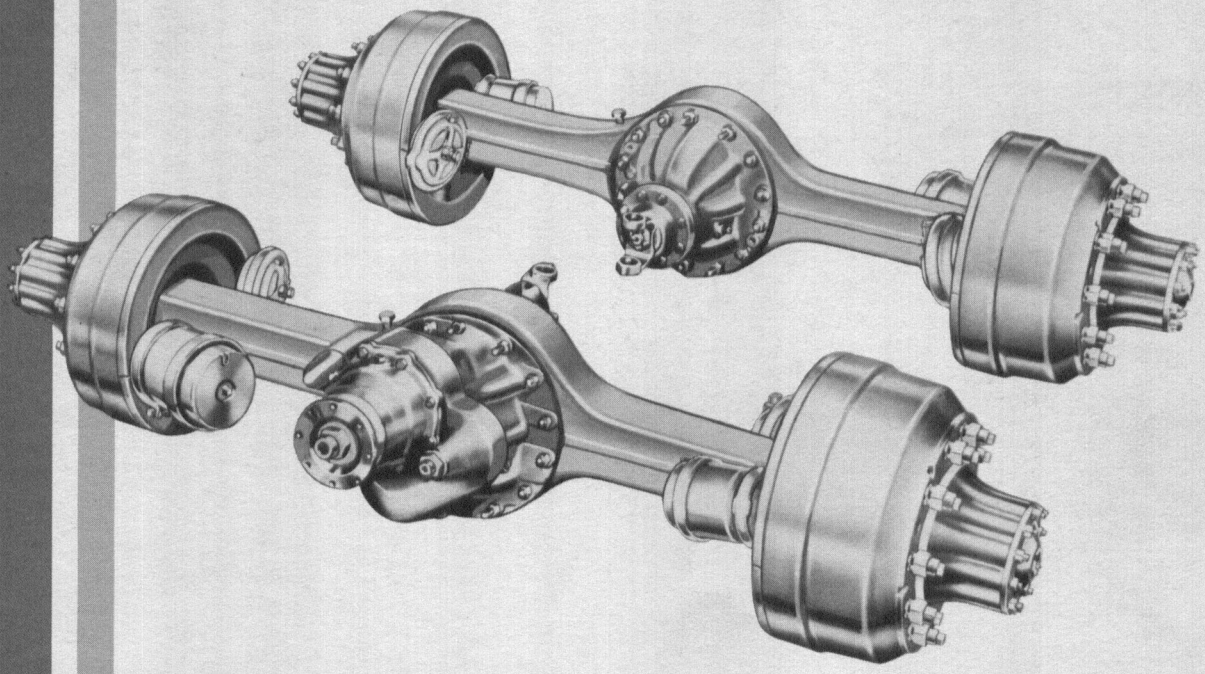

Single-Reduction Tandem Axles

Use only genuine
ROCKWELL
replacement parts

PURPOSE OF THIS BOOK

Rockwell International has produced this book to serve exclusively as an aid to users of its products in identifying and purchasing Rockwell axle parts.

This book was designed to standardize the process of parts replacements for all Rockwell International users in any locality. Clear pictorial views of every part with proper numbering results in ease of identification.

USING THIS PARTS BOOK

This book begins with a complete layout, followed by a division of the axle into sections for easy reference. The views used to illustrate the parts clearly show their proper relationship within the axle. Each part is keyed by number to the listed part name and part number in the corresponding chart. Gear ratios are also listed, as well as the quantity per axle of each part. To visually locate a major section, refer back to the complete layout. In this manner, a clear picture is immediately obtained of any part of the axle by the user of this book. You can also quickly point to the part number you are seeking.

The following simple steps will guide you through the entire procedure. Please review them before using this book:

1. Locate appropriate section in forward assembly. Notice that each section has a key number for identification.

2. Each page has the section number in the upper left-hand corner.

3. Parts have a key number for fast location in accompanying chart.

4. Locate key number of appropriate part in chart to find part name, part number and gear ratio.

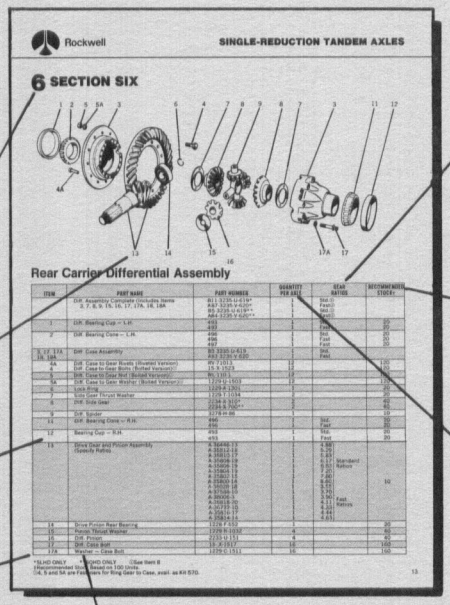

Rockwell SINGLE-REDUCTION TANDEM AXLES

6 SECTION SIX

Rear Carrier Differential Assembly

ITEM	PART NAME	PART NUMBER	QUANTITY PER AXLE	GEAR RATIOS	RECOMMENDED STOCK†
1	Diff. Assembly, Complete (Includes Items 2, 7, 8, 9, 15, 16, 17, 17A, 18, 18A	R11-2235-U-618*	1	Std.	
		R47-3235-V-630*		Fast	
		R8-3235-U-618**		Std.	
		R44-3235-V-630**		Fast	
1	Diff. Bearing Cup — L.H.	493	1	Std.	50
		493		Fast	20
2	Diff. Bearing Cone — L.H.	496	1	Std.	50
		496		Fast	20
		497		Fast	20
5, 1F, 17A, 18, 18A	Diff. Case Assembly	R8-3235-U-618	1	Std.	
		R47-3235-V-630		Fast	
4A	Diff. Case to Gear Rivets (Riveted Version)	15-1-1025	12		100
5	Diff. Case to Gear Rivet (Riveted Version)	15-1-1025	12		100
5	Diff. Case to Gear Rivet (Bolted Version)	No. 1351	12		100
5A	Diff. Case to Gear Washer (Bolted Version)	1279-U-1503	12		100
7	Lock Ring	1229-F-1041	2		20
8	Side Gear Thrust Washer	1229-T-1034	2		20
9	Diff. Side Gear	2294-D-1027	2		40
		2294-D-1027*			40
9	Diff. Spider	3179-H-08	2		40
11	Diff. Bearing Cone — R.H.	496	1	Std.	50
		496		Fast	20
12	Bearing Cup — R.H.	493	1	Std.	50
		493		Fast	20
13	Drive Gear and Pinion Assembly (Specify Ratio)	A-5.64HS-13	1	5.64	
		A-5.83HS-13		5.83	
		A-6.17HS-13		6.17	
		A-6.50HS-13		6.50	Standard Ratios
		A-6.86HS-13		6.86	
		A-7.17HS-13		7.17	
		A-7.50HS-13		7.50	50
		A-8.00HS-13		8.00	
		A-8.57HS-13		8.57	
		A-9.00HS-13		9.00	
		A-9.75HS-13		9.75	
		A-10.50HS-13		10.50	Fast Ratios
		A-11.25HS-13		11.25	
		A-12.00HS-13		12.00	
		A-7.58HS-13		7.58	
14	Drive Pinion Rear Bearing	1229-F-1032	4		20
15	Pinion Thrust Washer	1229-D-1032	4		20
17	Diff. Case Bolt	15-X-1017	12		100
17	Diff. Case Bolt	15-X-1017	12		100
17A	Washer — Case Bolt	1229-D-1511	12		100

*SLHD ONLY **SQHD ONLY (See Item 8
†Recommended Stock — Based on 100 Units.
14, 5 and 5A are Fasteners for Ring Gear to Case, avail. as Kit 570.

13

5. One asterisk footnote indicates the part referred to applies to SLHD model axle only.

6. Two asterisk footnote indicates the part referred to applies to SQHD model axle only.

7. Gear ratio application, spacer sizes, snap ring sizes, shim sizes are listed with corresponding numbers.

8. Most charts also show a column with the amount of recommended stock based on 100 units.

9. The quantity per axle of each part is shown in a separate column. Page 14 also includes a column showing the quantity per 100 axles.

All other parts are common to both models.

ROCKWELL GENUINE PARTS

Rockwell replacement parts are manufactured under the same exacting standards as original equipment axle components. They consist of the same long-life, reliable features. Also, they spell reduced maintenance costs for all operators.

Manufacturing advancements and technical innovations have resulted in superior axles and component parts. You receive all the advantages of original equipment design, engineering and quality, plus the latest in product improvements as they become available.

Rockwell offers the advantage of interchangeability of parts.

When you buy Rockwell genuine parts you get parts made by the world's largest independent supplier of mechanical components for heavy trucks and commercial vehicles. Half of all highway tractors have Rockwell drive axles.

We build the entire axle and component assembly. This means you get "single source" responsibility.

With backing like this, it's easy to be a Rockwell customer.

Remember, to do your job better always insist on genuine Rockwell parts.

ORDERING PARTS

When you have compiled the necessary data from this book, your next step will be ordering or purchasing the parts.

In the United States and Canada all axle parts should be obtained from your nearest truck supplier or truck manufacturer of your vehicle. Do not order Rockwell parts directly from Rockwell International. Outside the United States, parts should be ordered through the Rockwell affiliate serving that territory.

Rockwell parts are available nationwide from all major vehicle manufacturers and their authorized factory outlets. Visit the one nearest you.

Axle variations exist among vehicle manufacturers, therefore, it is suggested you check to make sure you have the correct part numbers before ordering your parts.

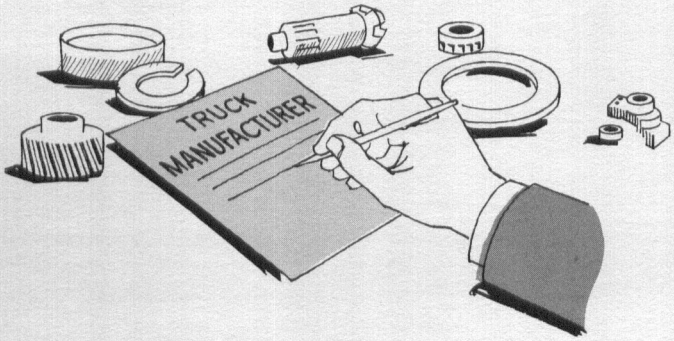

CONTENTS:

Page

Single-Reduction Tandem Axles
Complete Assembly 4, 5

Section One
Forward Differential Carrier
and Thru Shaft Assembly 6

Section Two
Forward Axle Main Axle
Differential Assembly 9

Section Three
Inter Axle
Differential Assembly 10

Section Four
Axle Housing and Components . 11

Section Five
Rear Carrier
Differential Assembly 12

Section Six
Rear Carrier
Differential Assembly 13

Section Seven
Axle Shaft Outer End 14
MPS Groups 14
Service Kits 15

SINGLE-REDUCTION TANDEM AXLES

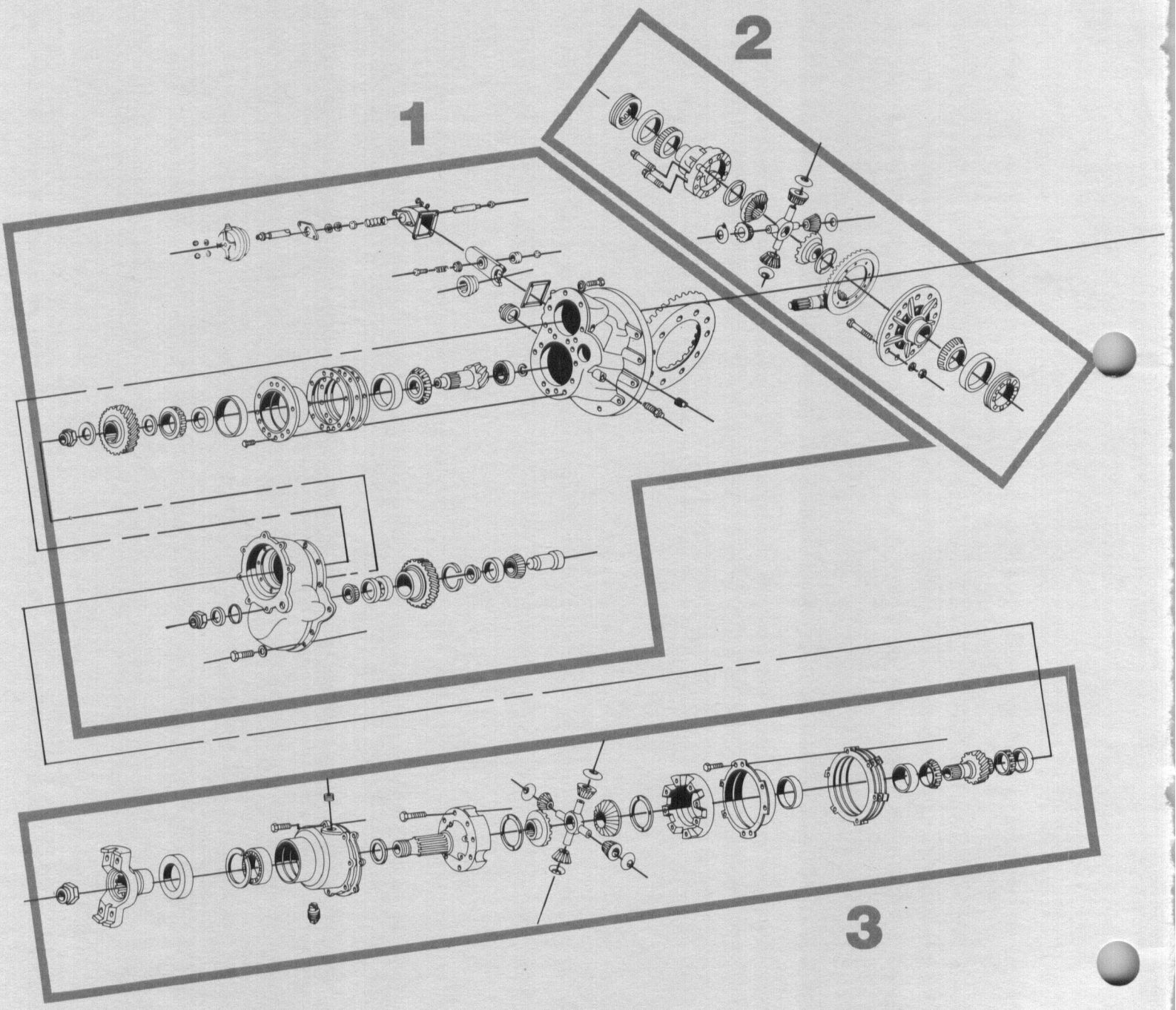

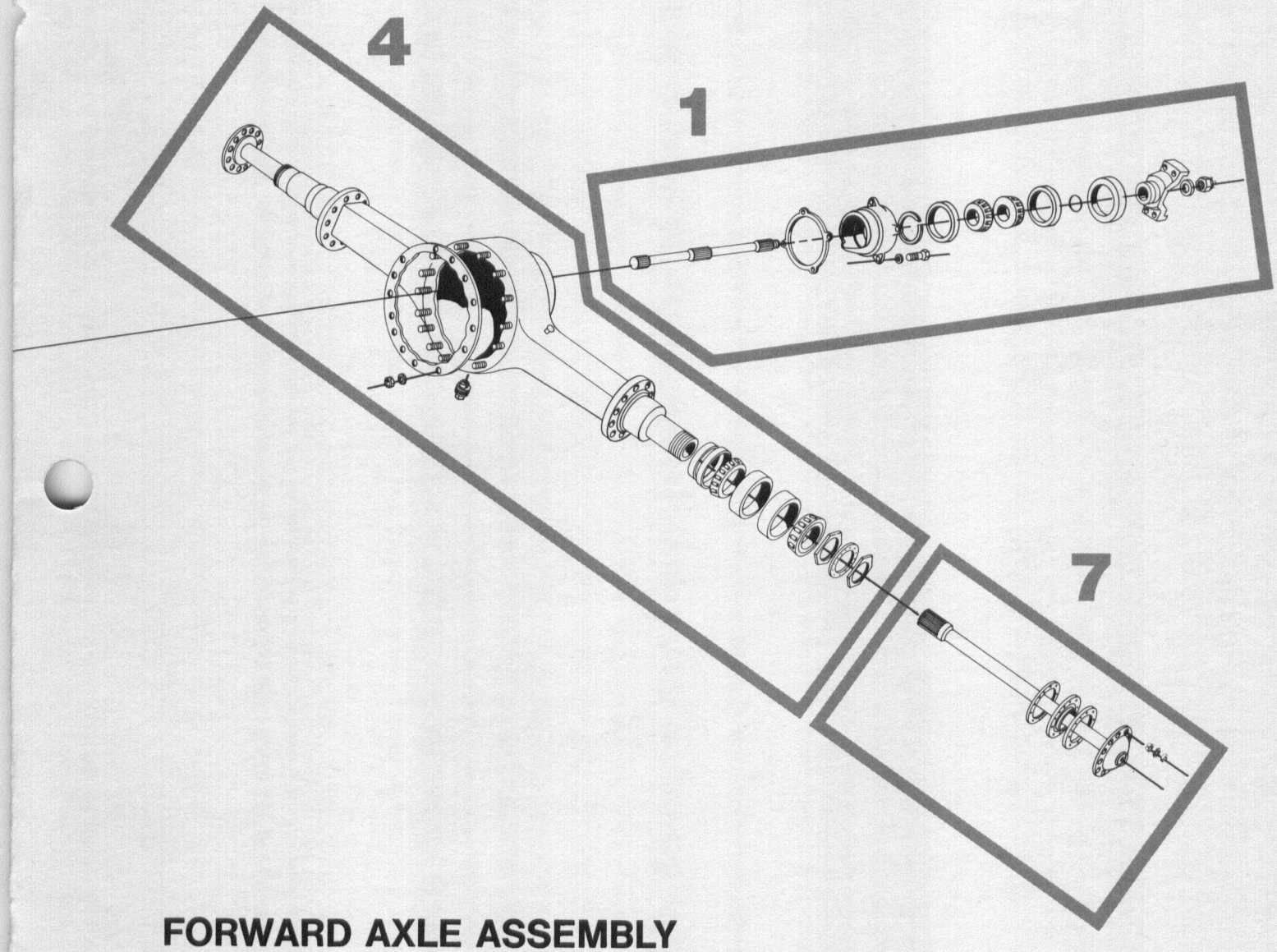

FORWARD AXLE ASSEMBLY

The above illustration shows the parts assembly of the single-reduction tandem. It applies to both the SLHD and SQHD. Parts used in the system are shown here. For ease of identification and part location, we have sectioned the axle rather than show complete assemblies.

Note: Sections 5 and 6 include complete rear carrier assemblies and individual parts and are shown on pages 12 and 13.

Note: Brake Part information is covered in the Cam-Master® and the Stopmaster® "wedge" brake catalogs.

1 SECTION ONE

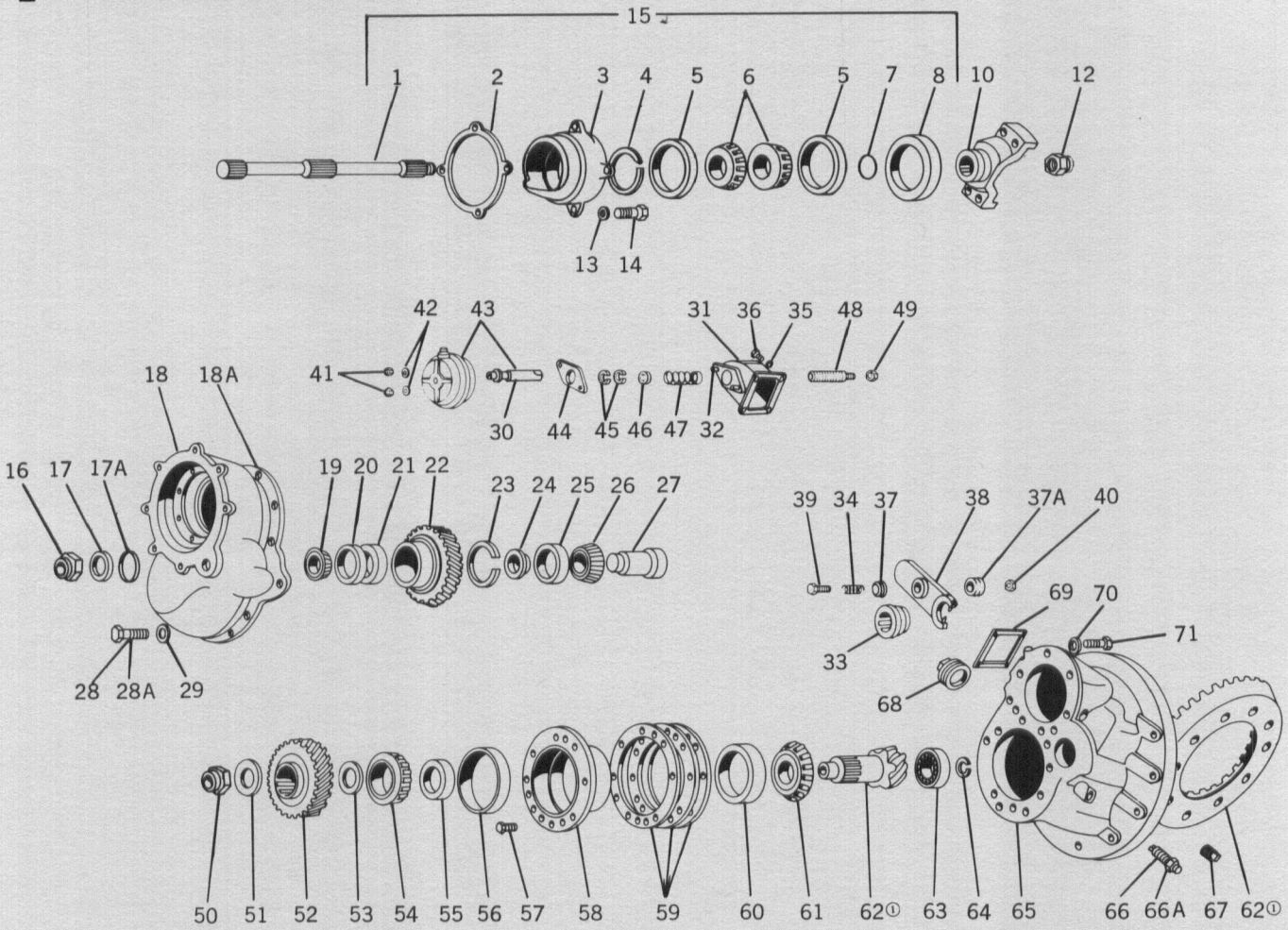

Forward Differential Carrier and Thru Shaft Assembly

PART NAME	PART NUMBER	DESCRIPTION	QUANTITY PER AXLE	GEAR RATIOS
Diff. Carrier Assy. (SLHD)	E23-3200-T-800	Less inter-axle diff. Furn. less yoke. Yoke as specified.	1	Fast 3.55, 3.70, 3.90, 4.11, 4.33, 4.44, 4.63
Diff. Carrier Assy. (SLHD)	E53-3200-T-800	Less inter-axle diff. Furn. with A1-3897-L-1000 yoke assy.	1	
Diff. Carrier Assy. (SLHD)	H10-3200-T-800	With inter-axle diff. Furn. less yoke. Yoke as specified.	1	
Diff. Carrier Assy. (SLHD)	H7-3200-T-800	With inter-axle diff. Furn. with A1-3897-L-1000 yoke assy.	1	
Diff. Carrier Assy. (SLHD)	D21-3200-T-800	Less inter-axle diff. Furn. less yoke. Yoke as specified.	1	Standard 4.87, 5.28, 5.83, 6.17, 6.83, 7.20, 7.80, 8.60
Diff. Carrier Assy. (SLHD)	E52-3200-T-800	Less inter-axle diff. Furn. with A1-3897-L-1000 yoke assy.	1	
Diff. Carrier Assy. (SLHD)	H9-3200-T-800	With inter-axle diff. Furn. less yoke. Yoke as specified.	1	
Diff. Carrier Assy. (SLHD)	H8-3200-T-800	With inter-axle diff. Furn. with A1-3897-L-1000 yoke assy.	1	
Diff. Carrier Assy. (SQHD)	G78-3200-T-800	With inter-axle diff. Furn. less yoke. Yoke as specified.	1	Fast 3.55, 3.70, 3.90, 4.11, 4.33, 4.44, 4.63
Diff. Carrier Assy. (SQHD)	G75-3200-T-800	With inter-axle diff. Furn. with A1-3897-L-1000 yoke assy.	1	
Diff. Carrier Assy. (SQHD)	G77-3200-T-800	With inter-axle diff. Furn. less yoke. Yoke as specified.	1	Standard 4.87, 5.28, 5.83, 6.17, 6.83, 7.20, 7.80, 8.60
Diff. Carrier Assy. (SQHD)	G76-3200-T-800	With inter-axle diff. Furn. with A1-3897-L-1000 yoke assy.	1	

When ordering above diff. carrier assys., specify ratio.

ITEM	PART NAME	PART NUMBER	QUANTITY PER AXLE	RECOMMENDED STOCK†
		TWO TAPERED BEARINGS		
1	Through Shaft	3880-K-921	1	10
2	Gasket	2208-C-445	1	20
3, 5	Rear Bearing Cage & Cup Assy.	A-3226-Q-537	1	10
1, 3, 4, 5, 6, 7, 8, 12	Rear Bearing Cage, Oil Seal, Thru Shaft, Bearing & Snap Ring Assy.	A1-3226-Q-537	1	10
4	Snap Ring .155 .158 .161 .164 .167 .170 .173 .176 .179 .182	1229-A-2237 1229-B-2238 1229-C-2239 1229-D-2240 1229-E-2241 1229-F-2242 1229-G-2243 1229-H-2244 1229-J-2246 1229-K-2247	As Required	10 Ea.
5	Bearing Cup	LM-603011	2	40
6	Bearing Cone	LM-603049	2	40
7	Thru Shaft Snap Ring	1829-A-859	1	20
8	Oil Seal Assy.	A-1205-Q-1655	1	20
10	Companion Yoke Assy.	As Specified	1	10
12	Yoke Nut	1227-Z-936	1	10
13	Cap Screw Washer	1229-K-1597	4	40
14	Cap Screw	S-268-1	4	40
15	Kit (Pre-Assembled) See Description Pg. 14	MPS-1842	1	10
16	Idler Shaft Nut	1227-Z-936	1	10
17	Idler Shaft Nut Washer	1229-A-2653	1	10
17A	Gear Shaft "O" Ring	2208-U-463	1	10
18	Adapter Case (Only)	3280-Y-3977	1	10
16, 17, 17A, 18, 20, 22, 23, 24, 25	Adapter Case & Idler Gear Assy.	A-3280-Y-3977	1	
18A	Gasket — Silastic (3 oz. Tube)	1199-T-3842	1	(See Kit 533-12 Tubes) Page 15
19	Front Bearing Cone	31597	1	20
20	Front Bearing Cup	31520	1	20
21	Bearing Spacer .750 .760 .770 .780 .740 .247 .252	2203-Y-2521 2203-Z-2522 2203-A-2523 2203-B-2524 2203-C-2525 2203-D-2526 2203-J-2532	Use One Ea. As Required	10 Ea.
19, 21, 22, 23, 24, 25	Idler Gear, Bearing & Spacer Assy.	A1-3892-D-1824	1	
22, 23, 24, 25	Idler Gear Bearing Cup, Spacer & Ring Assy.	A3892-D-1824	1	—
23	Idler Gear Bearing Snap Ring	1229-N-1470	1	20
24	Bearing Spacer	1244-X-726	1	20
25	Rear Bearing Cup	31520	1	20
26	Rear Bearing Cone	31597	1	20
27	Idler Gear Shaft	3280-P-2226	1	10
28	Cap Screw 1½" Overall	15-X-1328	2	20
28A	Cap Screw 1⅜" Overall	S-2811-1	8	80
29	Washer	1229-C-1511	10	100
30	Shift Shaft (Included in Item #43) Not Sold Separately	2297-X-752	1	10
31, 32	Shift Shaft Housing and Stud Assembly	A-3280-D-2526	1	10
32	Shift Housing Capscrew	SN-613-1	2	20
33	Collar	3280-X-2520	1	10
34	Shift Fork Spring	2258-G-397	1	10
35	Washer	WA-16	4	40
36	Cap Screw	S-268-1	4	40
37	Shift Fork Seat	1229-M-1599	1	10
37A	Ball-Shift Fork	1199-V-1712	1	10
38	Shift Fork Assembly	A-2297-E-811	1	10
39	Shift Fork Bolt	15-X-1306	1	10
40	Shift Fork Nut	NL-16-1	1	10
41	Nut	N-16-1	2	20
42	Washer	1229-F-1514	2	20
43, 30	Shift Chamber Assy. (Includes Item #30)	A-3261-S-175	1	10
44	Gasket	2208-M-429	1	20
45	Snap Ring	1229-W-1245	2	20

†Recommended Stock Based on 100 Units.

Continued on Page 8

Forward Differential Carrier and Thru Shaft Assembly (Cont'd)

ITEM	PART NAME	PART NUMBER	QUANTITY PER AXLE	GEAR RATIOS	RECOMMENDED STOCK†
46	Washer	1229-R-798	1		10
47	Spring	2258-U-411	1		10
48	Stop Screw	15-X-851	1		10
49	Stop Screw Nut	13-X-163	1		10
50	Drive Pinion Nut	1227-D-940	1		10
51	Gear Spacer Washer	1229-N-1730	1		10
52	Driven Drop Box Gear	3892-E-1825	1		20
53	Pinion Bearing Spacer	1229-S-1449	1	Use With These Ratios Only: 3.55, 3.70, 3.90, 4.11, 4.33, 4.44, 4.63, 5.29, 5.83	10
54	Outer Bearing Cone	72200-C	1		20
55	Forward Bearing Spacer .238 .239 .240 .241 .242 .243 .249 .255 .261 .267 .273	2203-Y-1091 2203-Z-1092 2203-A-1093 2203-B-1094 2203-C-1095 2203-D-1096 2203-E-1097 2203-F-1098 2203-G-1099 2203-H-1100 2203-J-1102	As Required		10 ea.
56	Outer Bearing Cup	72487	1		20
57	Cage Cap Screw	10-X-1027	8		20
58	Drive Pinion Cage and Cup Assembly	A-3226-A-131	1		10
59 59 59	Shim — Thin .005 Shim — Medium .010 Shim — .003	2203-K-7447 2203-J-7446 2203-L-7448	3 4 1		60 80 10
59	Shim	2203-Z-1404	1	Use With These Ratios Only: 4.88, 6.17, 6.83, 7.80, 8.60, 7.20	20
60	Inner Bearing Cup	72487	1		20
61	Inner Bearing Cone	72200-C	1		20
62①	Drive Gear and Pinion Assembly (Specify Ratio. Sold only as Assembly)	A-36446-12 A-35812-17 A-35810-16 A-35808-18 A-35806-18 A-35804-18 A-35802-14 A-35800-15 A-36028-17 A-37588-9 A-38006-1 A-35818-19 A-36722-9 A-35816-16 A-35814-13	1 1 1 1 1 1 1 1 1 1 1 1 1 1 1	4.88 5.29 5.83 6.17 6.83 7.20 7.80 8.60 3.55 3.70 3.90 4.11 4.33 4.44 4.63 (Standard Ratios: 6.17, 6.83, 7.20, 7.80, 8.60; Fast Ratios: 3.55, 3.70, 3.90, 4.11, 4.33, 4.44, 4.63)	10
63	Drive Pinion Rear Bearing	1228-F-552	1		20
64	Lock Ring	1229-A-1301	1		10
65	Carrier Case and Cap	A2-3200-T-800	1		10
66	Drive Gear Thrust Screw	15-X-1025	1		10
66A	Drive Gear Thrust Screw Nut	13-X-41	1		10
67	Inspection Oil Plug	P-212	1		10
68	Oil Filler Hole Plug (Rear Axle)	P-212	1		10
69	Gasket	2208-D-446	1		20
70	Washer	1229-V-1556	4		40
71	Bearing Cap Capscrew	S-21238-1	4		40

①Not Serviced Separately

†Recommended Stock Based on 100 Units.

2 SECTION TWO

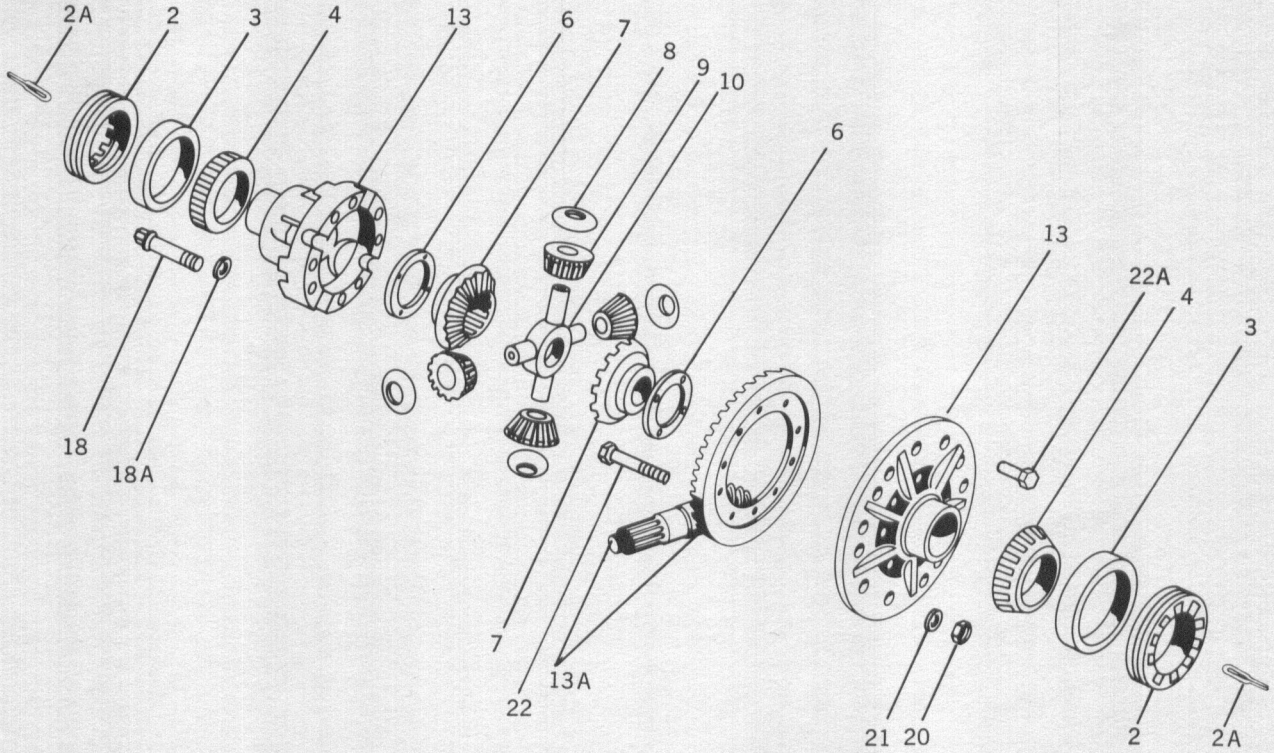

Forward Axle — Main Axle Differential Assembly

ITEM	PART NAME	PART NUMBER	QUANTITY PER AXLE	GEAR RATIOS	RECOMMENDED STOCK†
	Diff. Assembly (Includes Items 6, 7, 8, 9, 10, 13, 18, 18A, 19, 19A)	B11-3235-U-619* A87-3235-V-620* B5-3235-U-619** A84-3235-V-620**	1 1 1 1	Std. Fast Std. Fast	
2	Diff. Bearing Adjusting Ring	2814-M-65	2		20
2A	Adj. Ring Lock Cotter Pin	1199-R-2176	2		20
3	Diff. Bearing Cup	493	2	Std. & Fast	40
4	Diff. Bearing	496 497	2 1	Std. & Fast 1 Fast	40 20
6	Side Gear Thrust Washer	1229-T-1034	2		40
7	Diff. Side Gear (2-21 Spline) (2⅛-22 Spline)	2234-X-310* 2234-X-700**	2 2		40 40
8	Pinion Thrust Washer	1229-R-1032	4		40
9	Diff. Pinion	2233-U-151	4		80
10	Diff. Spider	3278-H-86	1		10
13, 18, 18A, 19, 19A	Diff. Case Assy.	B3-3235-U-619* A83-3235-V-620**	1 1	Std. Fast	
13A	Drive Gear and Pinion Assembly (Page 8 — Item 62, Listing For Assembly Number & Ratio)		1		
18	Diff. Case Assy. Bolt	15-X-1517	16		160
18A	Diff. Case Bolt Washer	1229-C-1511	16		160
20	Nut ③ — Gear to Case Bolt	NL-110-1 } Kit 570	12		120
21	Washer ③ — Gear to Case Bolt	1229-U-1503 } Kit 570	12		120
22	Bolt ③ — Gear to Case (Bolted Version)	15-X-1523 } Kit 570	12		120
22A	Rivet-Gear To Case (Riveted Version)	RV-71013	12		120

*SLHD ONLY
**SQHD ONLY
③20, 21, and 22 are fasteners for ring gear to differential case half, available as Kit 570.
†Recommended Stock Based on 100 Units.

3 SECTION THREE

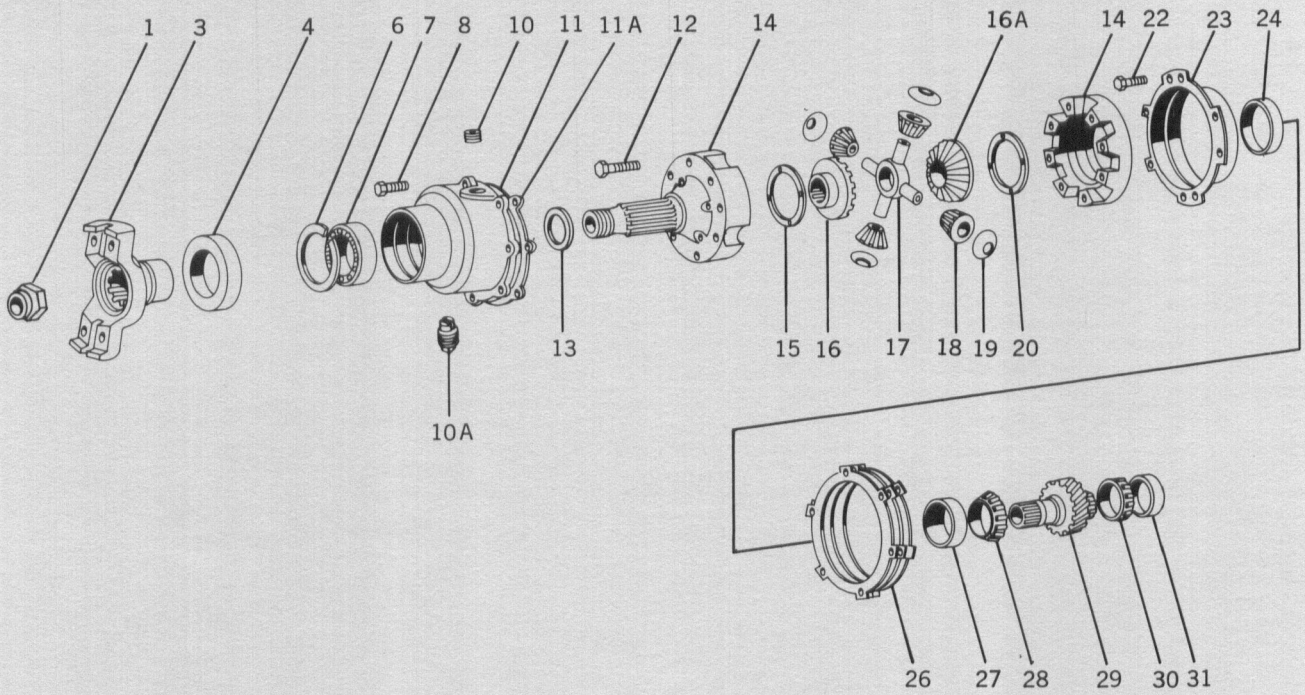

Inter-Axle Differential Assembly

ITEM	PART NAME	PART NUMBER	QUANTITY PER AXLE	RECOMMENDED STOCK†
1	Input Yoke Nut	1227-A-937	1	10
3	Input Shaft Yoke	As Specified	1	10
4	Oil Seal Assy.	A-1205-L-714	1	20
6	Snap Ring	1229-P-1446	1	10
7	Front Radial Bearing	1228-V-204	1	20
8	Cap Screw	S-2710-1	8	80
10	Oil Filler Hole Plug	1850-Q-43	1	10
10A	Oil Drain Hole Plug	P-212	1	10
11	Inter. Diff. Housing — Only	3280-V-2518	1	
4, 6, 7, 11	Inter. Diff. Housing Assy.	A-3280-V-2518	1	
11A	Gasket (Silastic) (3-oz.)	1199-T-3842	1	20
12	Case Cap Screw	15-X-1083	8	80
13	Spacing Washer	1244-Y-701	1	10
14	Inter. Diff. Case Assy. (Inc. Items 1 & 24)	A11-3235-R-564	1	
14A	Inter-Axle Diff. Assembly (Complete) (Includes Items 1, 12, 14, 15, 16, 16A, 17, 18, 19, 20, 24)	A10-3235-R-564	1	
15	Side Gear Thrust Washer — Forward	1229-J-1622	1	10
16	Diff. Side Gear — Forward	2234-M-325	1	10
16A	Diff. Side Gear — Rear	2234-B-340	1	20
17	Diff. Spider	3278-M-91	1	10
18	Diff. Pinion	2233-A-105	4	40
19	Pinion Thrust Washer	1229-U-1061	4	40
20	Side Gear Thrust Washer — Rear	1229-G-1619	1	10
22	Cage Cap Screw	S-267-1	6	60
23	Bearing Cage and Cup (Items 23, 27) Assy.	A-3226-F-708	1	10
24	Bushing	1225-V-880	1	20
26	Shim .003 .010	2203-R-3008 2203-S-3009	4 1	40 10
27	Front Bearing Cup	29630	1	20
28	Front Bearing Cone	29675	1	20
29	Inter. Diff. Housing Upper Drive Gear	3892-P-2044	1	10
30	Rear Bearing Cone	29675	1	20
31	Rear Bearing Cup	29630	1	20

†Recommended Stock Based on 100 Units.

4 SECTION FOUR

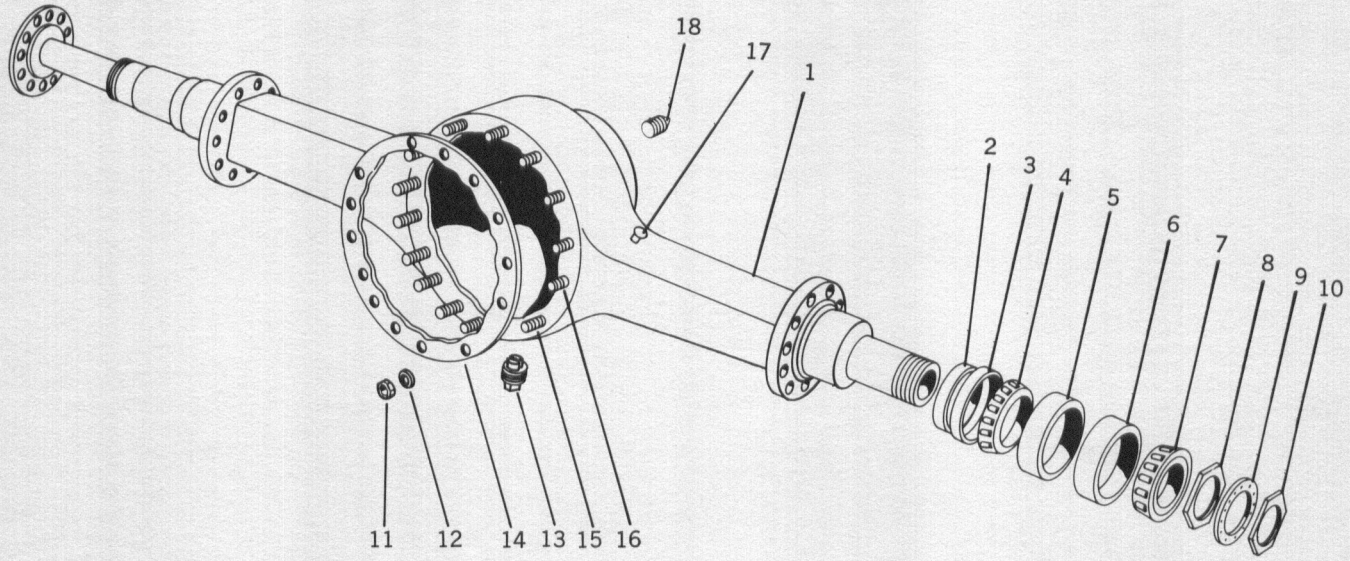

Axle Housing and Components (Forward and Rear Axles)

ITEM	PART NAME	PART NUMBER	QUANTITY PER AXLE	RECOMMENDED STOCK†‡
1	Axle Housing Assemblies	As Specified		
2	Seal (Oil) and Wiper — Inner Seal (Oil) Assy. Only — Inner	A-1205-W-1349* A-1205-T-696**	2 2	40 40
3	Wiper — Inner Included in Item 2	1199-B-1666** 1199-V-1296*	2 2	20
4	Inner Wheel Bearing	47686* 598-A**	2 2	40 40
5	Inner Wheel Bearing Cup	47620* 592-A**	2 2	40 40
6	Outer Wheel Bearing Cup	39520* 572**	2 2	40 40
7	Outer Wheel Bearing	39590* 580**	2 2	40 40
8	Adjuster Nut — Inner	1227-Z-1040* 1227-W-517**	2 2	20 20
9	Adjuster Nut Washer	1229-G-1021* 1229-U-1009**	2 2	20 20
10	Adjuster Nut — Outer	1227-R-330** 1227-E-1045*	2 2	20 20
11	Carrier to Housing Nut	NL-110-1	5	50
12	Carrier to Housing Washer	1229-U-1503	14	140
13	Drain Hole Plug	1250-Z-182	1	10
14	Carrier to Housing Gasket — Silastic (3-oz. Tube)	1199-T-3842	1	(See Kit 533) 12 Tubes, Pg. 15
15	Carrier to Housing Stud — Medium	SN-1023-1	4	40
15	Carrier to Housing Stud — Short	SN-1021-1	1	10
16	Carrier to Housing Cap Screw	S-21014-1	9	90
17	Housing Breather	A-1199-P-1394	1	
18	Heat Indicator Hole Plug Ass'y.	A-1199-S-1709	1	10

*SLHD ONLY **SQHD ONLY
†Recommended Stock Based on 100 Units.
‡Note: For Both Forward & Rear Axles, Double Quantity Shown.

5 SECTION FIVE

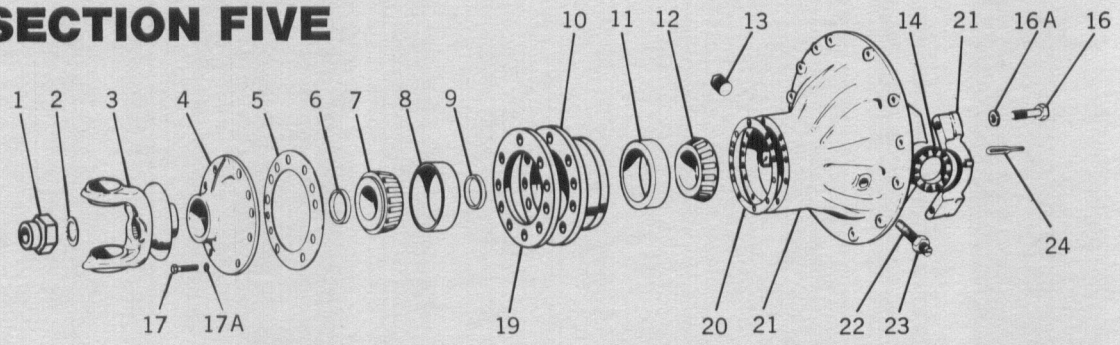

Rear Carrier Differential Assembly

PART NAME	PART NUMBER	DESCRIPTION	QUANTITY PER AXLE	GEAR RATIOS
Djff. Carrier Assy. (SLHD)	F52-3200-C-393	LHR Carrier, Furn. Less Yoke. Yoke As Specified.	1	Fast 3.55, 3.70, 3.90, 4.11, 4.33, 4.44, 4.63
Diff. Carrier Assy. (SLHD)	F55-3200-C-393	LHR Carrier, Furn. With A1-3280-G-2269 Yoke Assy.	1	
Diff. Carrier Assy. (SQHD)	F51-3200-C-393	QHR Carrier, Furn. Less Yoke. Yoke As Specified.	1	
Diff. Carrier Assy. (SQHD)	F67-3200-C-393	QHR Carrier, Furn. With A1-3280-G-2269 Yoke Assy.	1	
Diff. Carrier Assy. (SLHD)	F50-3200-C-393	LHR Carrier, Furn. Less Yoke. Yoke As Specified.	1	Standard 4.87, 5.28, 5.83, 6.17, 6.83, 7.20, 7.80, 8.60
Diff. Carrier Assy. (SLHD)	F65-3200-C-393	LHR Carrier, Furn. With A1-3280-G-2269 Yoke Assy.	1	
Diff. Carrier Assy. (SQHD)	F49-3200-C-393	QHR Carrier, Furn. Less Yoke. Yoke As Specified.	1	
Diff. Carrier Assy. (SQHD)	F66-3200-C-393	QHR Carrier, Furn. With A1-3280-G-2269 Yoke Assy.	1	

ITEM	PART NAME	PART NUMBER	QUANTITY PER AXLE	GEAR RATIOS	RECOMMENDED STOCK†
1	Yoke Nut	1227-Z-936	1		10
2	Yoke Washer	1229-A-2653	1		10
3	Companion Yoke & Slinger Assy.	(As Specified)			
4, 6	Cage Cover and Seal Assembly	A-3266-H-86	1		10
5	Gasket	2208-E-421	1		20
6	Seal	A-1805-B-80	1		20
7	Outer Forward Bearing	72188-C	1		20
8	Outer Forward Bearing Cup	72487	1		20
9	Forward Bearing Spacer .238 .239 .240 .241 .242 .243 .249 .255 .261 .267 .273	2203-Y-1091 2203-Z-1092 2203-A-1093 2203-B-1094 2203-C-1095 2203-D-1096 2203-E-1097 2203-F-1098 2203-G-1099 2203-H-1100 2203-J-1102	As Required		10 ea.
8, 10, 11	Forward Bearing Cage and Cup Assembly	A-3226-Z-78	1		10
11	Inner Forward Bearing Cup	72487	1		20
12	Inner Forward Bearing	72200-C	1		20
13	Inspection Hole Plug	P-212	1		10
14	Bearing Adjuster Ring	2814-M-65	2		20
16	Cap Screw	S-21238-1	4		40
16A	Diff. Bearing Cap Screw Washer	1229-V-1556	4		40
17	Cage Cap Screw	S-2813-1	8		80
17A	Cage Cap Screw — Washer	1229-C-1511	8		80
19	Shim — Thin	2203-K-7447	3		30
19	Shim — Medium	2203-J-7446	4		40
19	Shim — .003	2203-L-7448	1		10
20	Shim	2203-Z-1404	As Required	Use with these Ratios Only: 4.88, 6.17, 6.83, 7.20, 7.80, 8.60	10 ea.
21	Carrier & Cap Assembly	A2-3200-C-393 (Item 21 & 16)	1		
22	Thrust Screw	15-X-1025	1		10
23	Thrust Screw Nut	13-X-41	1		10
24	Adj. Ring Lock Pin	1199-R-2176	2		20

†Recommended Stock Based on 100 Units.

6 SECTION SIX

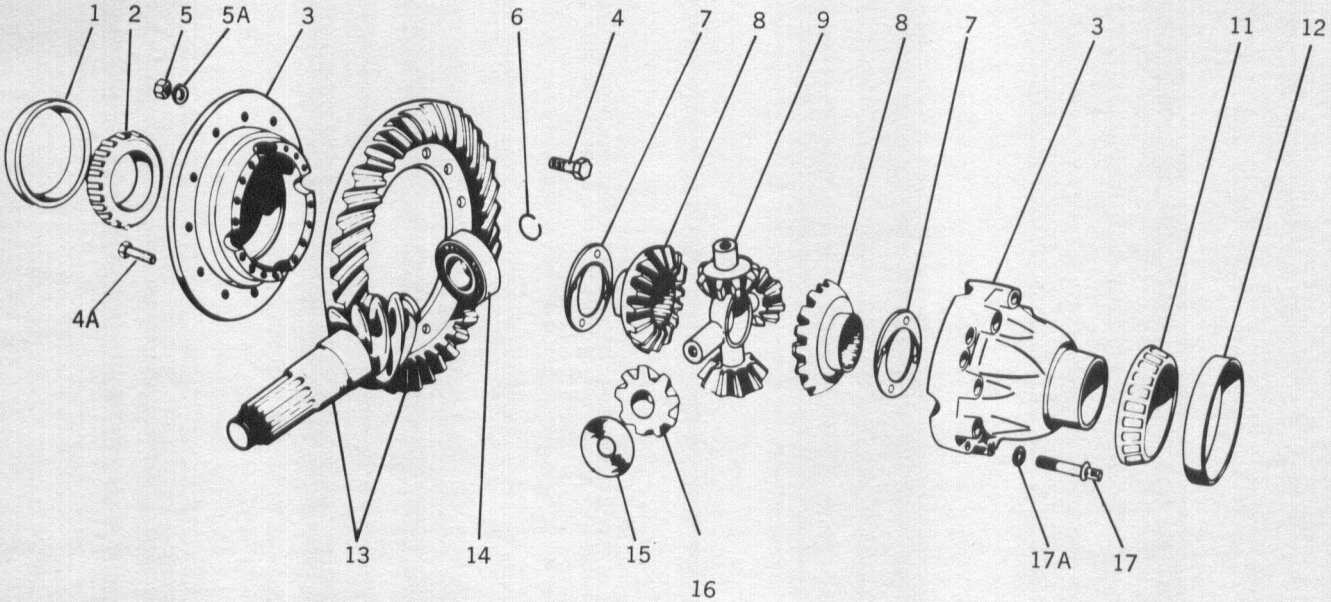

Rear Carrier Differential Assembly

ITEM	PART NAME	PART NUMBER	QUANTITY PER AXLE	GEAR RATIOS	RECOMMENDED STOCK†
	Diff. Assembly Complete (Includes Items 3, 7, 8, 9, 15, 16, 17, 17A, 18, 18A	B11-3235-U-619* A87-3235-V-620* B5-3235-U-619** A84-3235-V-620**	1 1 1 1	Std.① Fast① Std.① Fast①	
1	Diff. Bearing Cup — L.H.	493 493	1 1	Std. Fast	20 20
2	Diff. Bearing Cone — L.H.	496 496 497	1 1 1	Std. Fast Fast	20 20 20
3, 17, 17A 18, 18A	Diff. Case Assembly	B3-3235-U-619 A83-3235-V-620	1 1	Std. Fast	
4A 4	Diff. Case to Gear Rivets (Riveted Version) Diff. Case to Gear Bolts (Bolted Version)②	RV-71013 15-X-1523	12 12		120 120
5	Diff. Case to Gear Nut (Bolted Version)②	NL-110-1	12		120
5A	Diff. Case to Gear Washer (Bolted Version)②	1229-U-1503	12		120
6	Lock Ring	1229-A-1301	1		20
7	Side Gear Thrust Washer	1229-T-1034	2		20
8	Diff. Side Gear	2234-X-310* 2234-X-700**	2 2		40 40
9	Diff. Spider	3278-H-86	1		10
11	Diff. Bearing Cone — R.H.	496 496	1 1	Std. Fast	20 20
12	Bearing Cup — R.H.	493 493	1 1	Std. Fast	20 20
13	Drive Gear and Pinion Assembly (Specify Ratio)	A-36446-13 A-35812-18 A-35810-17 A-35808-19 A-35806-19 A-35804-19 A-35802-15 A-35800-14 A-36028-18 A-37588-10 A-38006-3 A-35818-20 A-36722-10 A-35816-17 A-35814-14	1 1 1 1 1 1 1 1 1 1 1 1 1 1 1	4.88 5.29 5.83 6.17 6.83 7.20 7.80 8.60 3.55 3.70 3.90 4.11 4.33 4.44 4.63 (Standard Ratios: 6.17–8.60; Fast Ratios: 3.55–4.63)	10
14	Drive Pinion Rear Bearing	1228-F-552	1		20
15	Pinion Thrust Washer	1229-R-1032	4		40
16	Diff. Pinion	2233-U-151	4		40
17	Diff. Case Bolt	15-X-1517	16		160
17A	Washer — Case Bolt	1229-C-1511	16		160

*SLHD ONLY **SQHD ONLY ①See Item 8
†Recommended Stock Based on 100 Units.
②4, 5 and 5A are Fasteners for Ring Gear to Case, avail. as Kit 570.

7 SECTION SEVEN

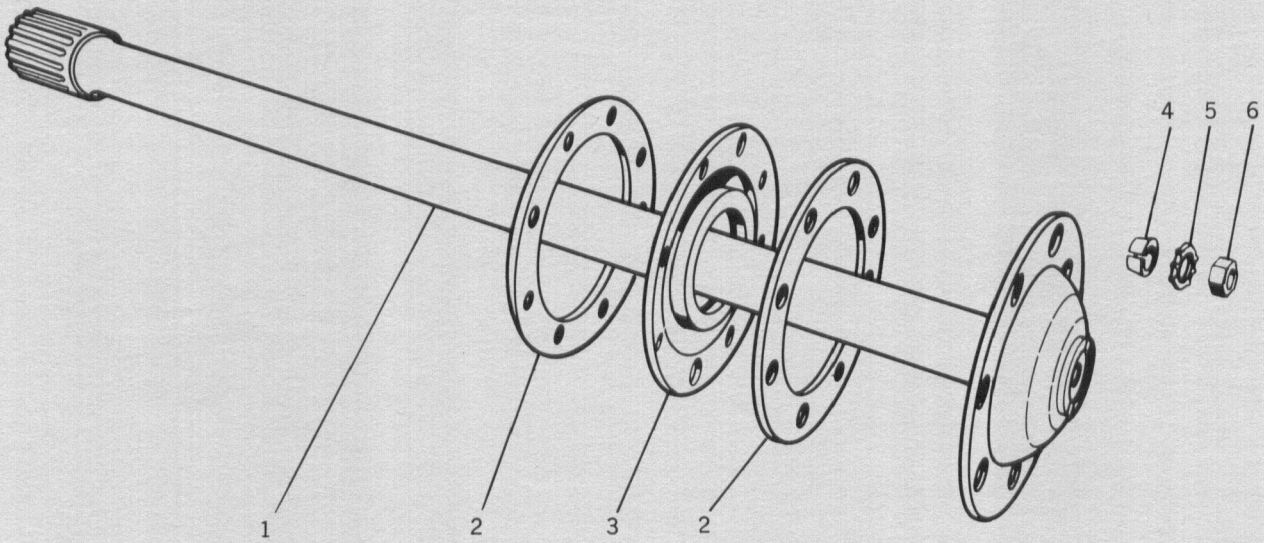

Axle Shaft — Outer End and Kits

ITEM	PART NAME	PART NUMBER	QUANTITY PER AXLE	QUANTITY PER 100 AXLES
1 1	Axle Shaft Axle Shaft	3202-X-6472* 3202-R-3268**	2 2	20 20
2 2	Gasket Gasket	2208-H-476* 2208-X-440**	2 4	40 80
3	Oil Seal	A-1205-N-612**	2	40
4 4	Dowel Dowel	1246-T-306* 1246-D-290**	24 16	240 160
5 5	Shake Proof Washer Shake Proof Washer	1229-C-1511* 1229-X-518**	24 16	240 160
6 6	Nut Nut	NL-18-1* NL-110-1**	24 16	240 160

*SLHD ONLY **SQHD ONLY

MPS GROUPS

MPS NO.	DESCRIPTION	MODEL
1764	Parts Req'd. to Add Inter-Axle Diff.	SLHD & SQHD
1842	Parts Req'd. to Change Single & Double Row Ball Brg. to Double Row Tapered Brg. at Output Cage of Inter-Axle Diff.	SLHD & SQHD
2294	Parts Req'd. to Upgrade Inter-Axle Diff. to New Style Brg. Case Design-Improved Lube Design.	SLHD & SQHD
2325	Same as MPS-2294 Except Also Includes Inter-Axle Diff. Housing, Idler Gear, Drive Gear, Brgs. & Adapter Assembly.	SLHD & SQHD
2337	Parts Req'd. to Change Over to Larger Capacity Inter-Axle Diff. with Tapered Brgs. & .500 Cap Screws at Adapter to Carrier Mounting.	SLHD & SQHD
2439	Parts Req'd. to Repair Inter. Diff. Housing and Inter. Diff. Assy.	SLHD & SQHD

SERVICE KITS

KIT NO.	DESCRIPTION	MODEL	ITEM NO.	PAGE NO.
202	Outer Oil Seal Kit	SLHD	2, 3 (Wiper Not Shown)	14
204	Outer Oil Seal Kit	SQHD	2, 3 (Wiper Not Shown)	14
261	Oil Seal and Gasket Kit	SLHD	2 2	11 14
315	Revacycle Diff. Nest — Less Spider Revacycle Diff. Nest — Less Spider	SLHD SLHD	6, 7, 8, 9 (LHD) 7, 8, 15, 16 (LHR)	9 13
316	Revacycle Diff. Nest — Less Spider Revacycle Diff. Nest — Less Spider	SQHD SQHD	6, 7, 8, 9 (QHD) 7, 8, 15, 16 (QHR)	9 13
317	Revacycle Diff. Nest — With Spider Revacycle Diff. Nest — With Spider	SLHD SLHD	6, 7, 8, 9, 10 (LHD) 7, 8, 9, 15, 16 (LHR)	9 13
318	Revacycle Diff. Nest — With Spider Revacycle Diff. Nest — With Spider	SQHD SQHD	6, 7, 8, 9, 10 (QHD) 7, 8, 9, 15, 16 (QHR)	9 13
322	Inter. Axle Differential Nest	SLHD, SQHD	11A, 13, 15, 16, 16A, 17, 18, 19, 20	10
349	Inter. Diff. Drive Gear, Idler Gear and Drop Box Gear	SLHD, SQHD	22, 23, 24, 25, 29, 52	7, 8
386	Inter. Diff. Case Assy., Drive Gear, Idler Gear and Drop Box Gear	SLHD, SQHD	12, 14, 20, 22, 23, 24, 25, 29, 52	7, 8, 10
462	Gasket and Shim Kit	QHD	2, 11A, 14, 18A, 26, 59, 69	6, 7, 8, 10, 11, 14
463	Gasket and Shim Kit	QHR	2, 5, 14, 19, 20	11, 12, 14
472	Gasket and Shim Kit	LHD	2, 11A, 14, 18A, 44, 59, 69	7, 8, 10, 11, 14
473	Gasket and Shim Kit	LHR	2, 5, 14, 19, 20	11, 12, 14
533	Contains 12-3 oz. Tubes of Silastic Gasket Material	SLHD, SQHD	11A 14 18A	10 11 7
563	Bearing and Seal Kit (Wheel End)	SLHD	2, 4, 7 2, 4, 5, 6	11 14
570	Bolted Gear to Case Parts	SL, SQHD	4, 5, 5A 20, 21, 22	13 9
998	S.L.A. Shift Parts Complete	SLHD, SQHD	31, 32, 33, 34, 35, 36, 37, 37A, 38, 39, 40, 41, 42, 43, 44, 45, 46, 47, 48, 49, 69	7, 8
1379	Oil Seal, Bearing, and Gasket Kit	SLHD	2, 4, 5, 6, 7 2	11 14
1913	Complete Diff. Brgs., Seal and Gasket Kit for Standard Ratios	SL, SQHD Forward Axle	3, 4, 5, 6, 7, 8, 14, 19, 20, 25, 26, 27, 28, 30, 31, 54, 56, 60, 61, 63	7, 8, 9, 10, 11
1914	Complete Diff. Brgs., Seal and Gasket Kit for Fast Ratios	SL, SQHD Forward Axle	3, 4, 5, 6, 7, 8, 14, 19, 20, 25, 26, 27, 28, 30, 31, 54, 56, 60, 61, 63	7, 8, 9, 10, 11
1915	Complete Diff. Brgs., Seal and Gasket Kit for Standard Ratios	SL, SQHD Rear-Rear	1, 2, 6, 7, 8, 11, 12, 14	11, 12, 13
1916	Complete Diff. Brgs., Seal and Gasket Kit for Fast Ratios	SL, SQHD Rear-Rear	1, 2, 6, 7, 8, 11, 12, 14	11, 12, 13
LHR-393	Diff. Overhaul Kit. Includes — Nest, Brgs., Seals, Gaskets and Shims	LHR, LHKR	1, 2, 6, 7, 8, 9, 11, 12, 14, 15, 16 (Inc. Kit 473)	11, 12, 13
QHR-393	Diff. Overhaul Kit. Includes — Nest, Brgs., Seals, Gaskets and Shims	QHR	Same As LHR-393 Exc. To Inc. Kit 463	11, 12, 13
LHF-800	Diff. Overhaul Kit. Includes — Nest, Brgs., Seals, Gaskets, Shims and Pinion Nut	LHF, LHKF	3, 4, 5, 6, 7, 8, 9, 10, 11A 13, 14, 16, 19, 20, 25, 26, 27, 28, 30, 31, 50, 54, 56, 60, 61, 63	7, 8, 9, 10, 11
LHF-800-A	Diff. Overhaul Kit. Includes — Main and Inter. Diff. Nest, Brgs., Seals, Gaskets, Shims and Pinion Nut	LHD, LHDK	3, 4, 5, 6, 7, 8, 9, 10, 11A, 13, 16, 19, 20, 25, 26, 27, 28, 30, 31, 50, 54, 56, 60, 61, 63, 66, 66A	7, 8, 9, 10
LHF-800-B	Diff. Overhaul Kit. Inter. Diff. Nest, Brgs., Seals and Gaskets	LHD, LHDK, QHD, QHDB	4, 7, 12, 13, 15, 16, 16A, 17, 18, 18A, 19, 20, 27, 28	7, 10
QDF-800	Diff. Overhaul Kit. Includes — Nest, Brgs., Seals, Gaskets, Shims and Pinion Nut	QHF, QHBF	3, 4, 5, 6, 7, 8, 9, 10, 11A, 13, 14, 16, 19, 20, 25, 26, 27, 28, 30, 31, 50, 54, 56, 60, 61, 63	7, 8, 9, 10, 11
QDF-800-A	Diff. Overhaul Kit. Main and Inter. Diff. Nest, Brgs., Seals, Gaskets, Shims and Pinion Nut	QHD, QHDB	3, 4, 5, 6, 7, 8, 9, 10, 11A, 13, 14, 15, 16, 16A, 17, 18, 19, 20, 25, 26, 27, 28, 30, 31, 50, 54, 56, 60, 61, 63	7, 8, 9, 10, 11

NUMERICAL PART LISTING

PART NO.	PAGE
493	9,13
496	9,13
497	9,13
572	11
580	11
592-A	11
598-A	11
29630	10
29675	10
31520	7
31597	7
39520	11
39590	11
47620	11
47686	11
72188-C	12
72200-C	8,12
72487	8,12
A-35800-14	13
A-35800-15	8
A-35802-14	8
A-35802-15	13
A-35804-18	8
A-35804-19	13
A-35806-18	8
A-35806-19	13
A-35808-18	8
A-35808-19	13
A-35810-16	8
A-35810-17	13
A-35812-17	8
A-35812-18	13
A-35814-13	8
A-35814-14	13
A-35816-16	8
A-35816-17	13
A-35818-19	8
A-35818-20	13
A-36028-17	8
A-36028-18	13
A-36446-12	8
A-36446-13	13
A-36722-9	8
A-36722-10	13
A-37588-9	8
A-37588-10	13
A-38006-1	8
A-38006-3	13
D21-3200-T-800	6
E23-3200-T-800	6
E52-3200-T-800	6
E53-3200-T-800	6
F49-3200-C-393	12
F50-3200-C-393	12
F51-3200-C-393	12
F52-3200-C-393	12
F55-3200-C-393	12
F65-3200-C-393	12
F66-3200-C-393	12
F67-3200-C-393	12
G75-3200-T-800	6
G76-3200-T-800	6
G77-3200-T-800	6
G78-3200-T-800	6
H7-3200-T-800	6
H8-3200-T-800	6
H9-3200-T-800	6
H10-3200-T-800	6

PART NO.	PAGE
KIT-202	15
KIT-204	15
KIT-261	15
KIT-315	15
KIT-316	15
KIT-317	15
KIT-318	15
KIT-322	15
KIT-349	15
KIT-386	15
KIT-462	15
KIT-463	15
KIT-472	15
KIT-473	15
KIT-570	15
KIT-533	15
KIT-563	15
KIT-998	15
KIT-1379	15
KIT-1913	15
KIT-1914	15
KIT-1915	15
KIT-1916	15
LHF-800	15
LHF-800-A	15
LHF-800-B	15
LHR-393	15
LM-603011	7
LM-603049	7
MPS-1764	14
MPS-1842	7,14
MPS-2294	14
MPS-2325	14
MPS-2337	14
MPS-2439	14
N-16-1	7
NL-16-1	7
NL-18-1	14
NL-110-1	9,11,13
P-212	8,10,12
QDF-800	15
QDF-800-A	15
QHR-393	15
RV-71013	9,13
S-267-1	10
S-268-1	7
S-2710-1	10
S-2811-1	7
S-2813-1	12
S-21014-1	11
S-21238-1	8,12
SN-613 -1	7
SN-1021-1	11
SN-1023-1	11
S11-3235-U-619	13
WA-16	7
10-X-1027	8
13-X-41	8,12
13-X-163	8
15-X-851	8
15-X-1025	8,12
15-X-1083	10
15-X-1306	7
15-X-1328	7
15-X-1517	9,13
15-X-1523	9,13
1199-V-1296	11
A-1199-P-1394	11

PART NO.	PAGE
1199-B-1666	11
A-1199-S-1709	11
1199-V-1712	7
1199-R-2176	9,12
1199-T-3842	7,10,11
A-1205-N-612	14
A-1205-T-696	11
A-1205-L-714	10
A-1205-W-1349	11
A-1205-Q-1655	7
1225-V-800	10
1227-R-330	11
1227-W-517	11
1227-Z-936	7,12
1227-A-937	10
1227-D-940	8
1227-Z-1040	11
1227-E-1045	11
1228-V-204	10
1228-F-552	8,13
1229-X-518	14
1229-R-798	8
1229-U-1009	11
1229-G-1021	11
1229-R-1032	9,13
1229-T-1034	9,13
1229-U-1061	10
1229-W-1245	7
1229-A-1301	8,13
1229-P-1446	10
1229-S-1449	8
1229-N-1470	7
1229-U-1503	9,11,13
1229-C-1511	7,9,12
1229-F-1514	7
1229-V-1556	8,12
1229-K-1597	7
1229-M-1599	7
1229-G-1619	10
1229-J-1622	10
1229-B-1666	7
1229-N-1730	8
1229-A-2237	7
1229-B-2238	7
1229-C-2239	7
1229-D-2240	7
1229-E-2241	7
1229-F-2242	7
1229-G-2243	7
1229-H-2244	7
1229-J-2246	7
1229-K-2247	7
1229-A-2653	7,12
1244-Y-701	10
1244-X-726	7
1246-D-290	14
1246-T-306	14
1250-Z-182	11
A-1805-B-80	12
1829-A-859	7
1850-Q-43	10
2203-Y-1091	8,12
2203-Z-1092	8,12
2203-A-1093	8,12
2203-B-1094	8,12
2203-C-1095	8,12
2203-D-1096	8,12
2203-E-1097	8,12

PART NO.	PAGE
2203-F-1098	8,12
2203-G-1099	8,12
2203-H-1100	8,12
2203-J-1102	8,12
2203-Z-1404	8,12
2203-Y-2521	7
2203-Z-2522	7
2203-A-2523	7
2203-B-2524	7
2203-C-2525	7
2203-D-2526	7
2203-J-2532	7
2203-R-3008	10
2203-S-3009	10
2203-J-7446	8,12
2203-K-7447	8,12
2203-L-7448	8,12
2208-E-421	12
2208-M-429	7
2208-X-440	14
2208-C-445	7
2208-D-446	8
2208-U-463	7
2208-H-476	14
2233-A-105	10
2233-U-151	9,13
2234-X-310	9,10
2234-M-325	10
2234-B-340	10
2234-X-700	9,13
2258-G-397	7
2258-U-411	8
2297-X-752	7
A-2297-E-811	7
2814-M-65	9,12
A2-3200-C-393	12
A2-3200-T-800	8
3202-R-3268	14
3202-X-6472	14
A-3226-Z-78	12
A-3226-A-131	8
A-3226-Q-537	7
A1-3226-Q-537	7
A-3226-F-708	10
A10-3235-R-564	10
A11-3235-R-564	10
B3-3235-U-619	9,13
B5-3235-U-619	9,13
B11-3235-U-619	9
A83-3235-V-620	9,13
A84-3235-V-620	9,13
A87-3235-V-620	9,13
A-3261-S-175	7
A-3266-H-86	12
3278-H-86	9,13
3278-M-91	10
3280-P-2226	7
3280-V-2518	10
A-3280-V-2518	10
3280-X-2520	7
A-3280-D-2526	7
3280-Y-3977	7
A-3280-Y-3977	7
3880-K-921	7
A-3892-D-1824	7
A1-3892-D-1824	7
3892-E-1825	8
3892-P-2044	10

Rockwell International

Automotive Operations

2135 West Maple Road
Troy, Michigan 48084

Descriptions and specifications contained in this catalog were in effect at the time this publication was approved for printing and are subject to change without notice or liability therefor. Rockwell International reserves the right to change or discontinue parts at any time.

SP-7706-1 9-78

Copyright Rockwell International, 1978

Litho in U.S.A.