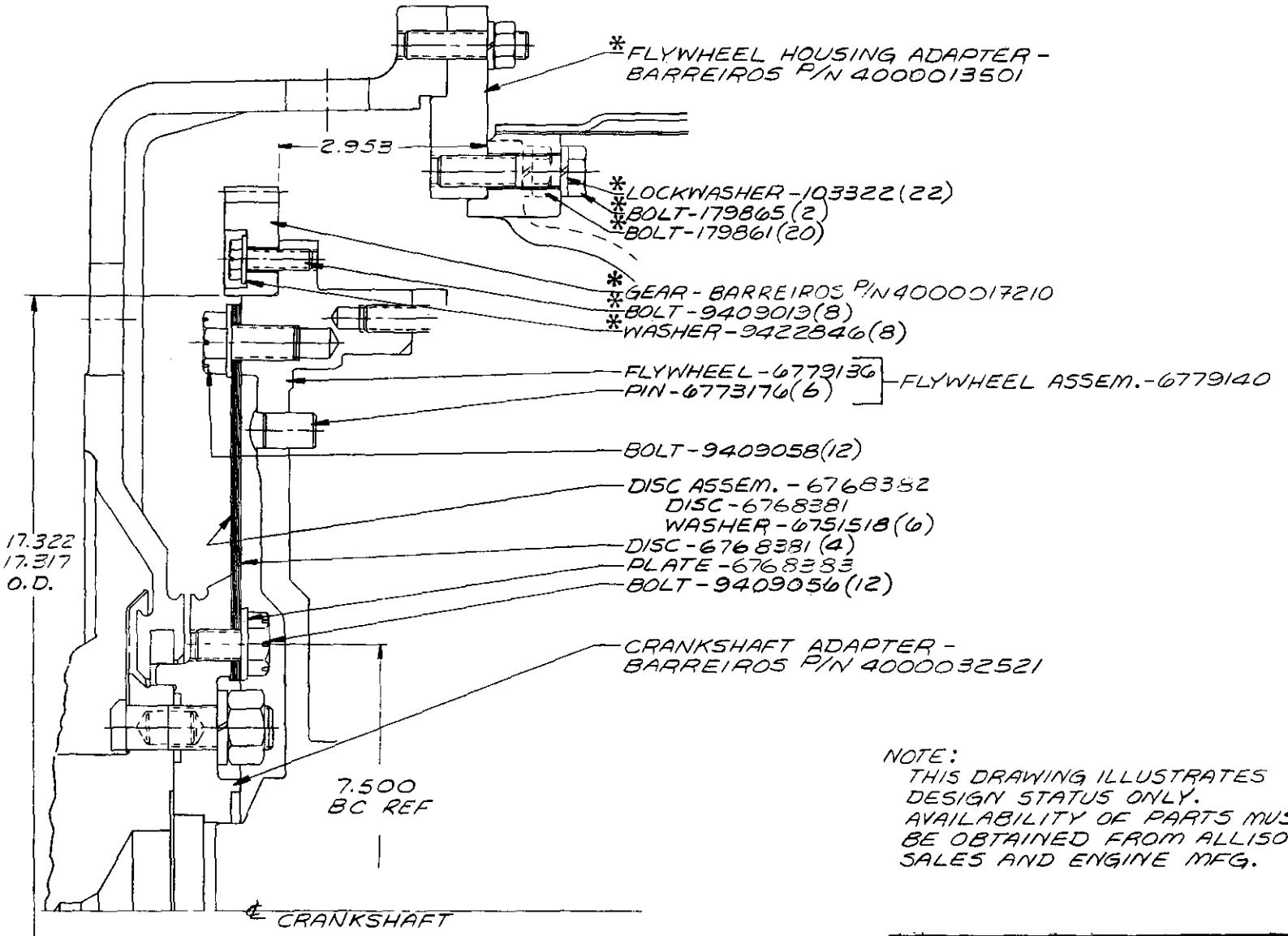

AS 04-079

NOTE:
THIS DRAWING ILLUSTRATES DESIGN STATUS ONLY. AVAILABILITY OF PARTS MUST BE OBTAINED FROM ALLISON SALES AND ENGINE MFG.

FOR TRANSMISSION DRIVE DATA NOT SHOWN SEE DRAWING AS 00-001

BASIC INSTALLATION DRAWING
4460 = AS 44-001
HT-70 = AS 40-001

*DENOTES PARTS NOT SUPPLIED WITH TRANSMISSION ASSEMBLY.

CHANGES				
J				
H				
G				
F				
E				
D				
C				
B				
A	12-23-75	6773176(6) WAS (12)	PH	HH

DRAWN	CHECKED	CHK. DRAFTSMAN
Hughes 4-6-65	E.R.D. 5-6-65	Getsinger 5-6-65
SCALE FULL	PROJ. ENGR.	APPL. ENGR. EW/DLR

GM GENERAL MOTORS

Allison TORQMATIC Drives

TITLE: BARREIROS DIESEL PHYSICAL ADAPTATION

MODEL HT-70 & 4460 | AS 04-079

ALLISON DIVISION · GENERAL MOTORS CORPORATION · INDIANAPOLIS, INDIANA

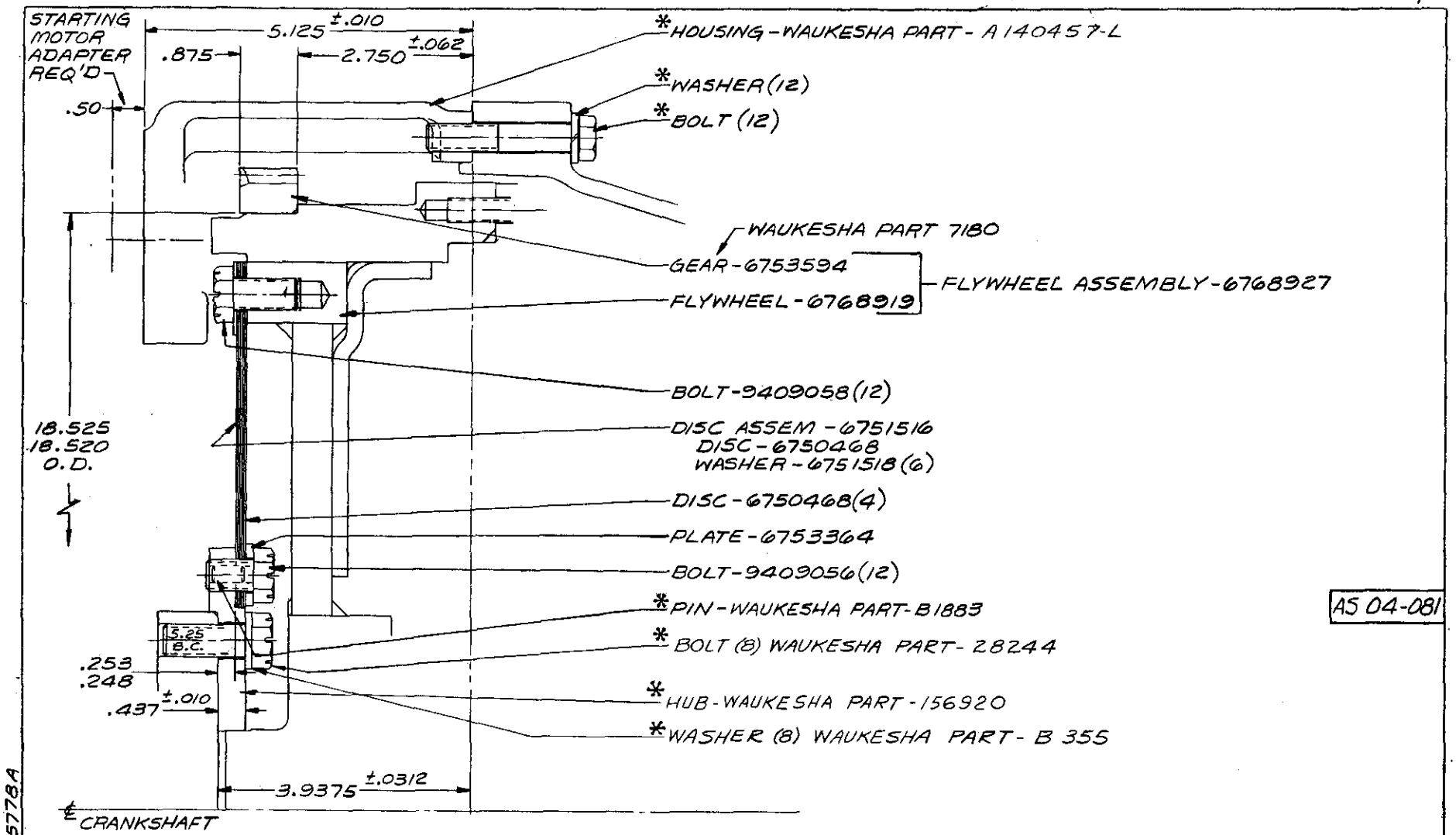

AS 04-081

BASIC INSTALLATION DRAWING
AS 51-003

NOTE:
THIS DRAWING ILLUSTRATES DESIGN STATUS ONLY. AVAILABILITY OF PARTS MUST BE OBTAINED FROM ALLISON SALES AND ENGINE MFR.

FOR CONVERTER DRIVE DATA NOT SHOWN SEE DRAWING AS 00-001

*DENOTES PARTS NOT SUPPLIED WITH CONVERTER ASSEMBLY

REF. WAUKESHA LAYOUT 45778A

CHANGES			
J			
H			
G			
F			
E			
D			
C			
B			
A			
DRAWN Hughes 5-17-65	CHECKED R.S. HARPER 5-24-65	GM RESPONSIBLE Britton 5-25-65	
SCALE FULL	PROJ. ENGR. Robinson 5-18-65	APPL. ENGR. E. WELCHER 5-18-65	

GM GENERAL MOTORS

Allison TORQMATIC Drives

TITLE: WAUKESHA "FB17 GU" (145-GZ) PHYSICAL ADAPTATION

MODEL TC-500 AS 04-081

ALLISON DIVISION · GENERAL MOTORS CORPORATION · INDIANAPOLIS, INDIANA

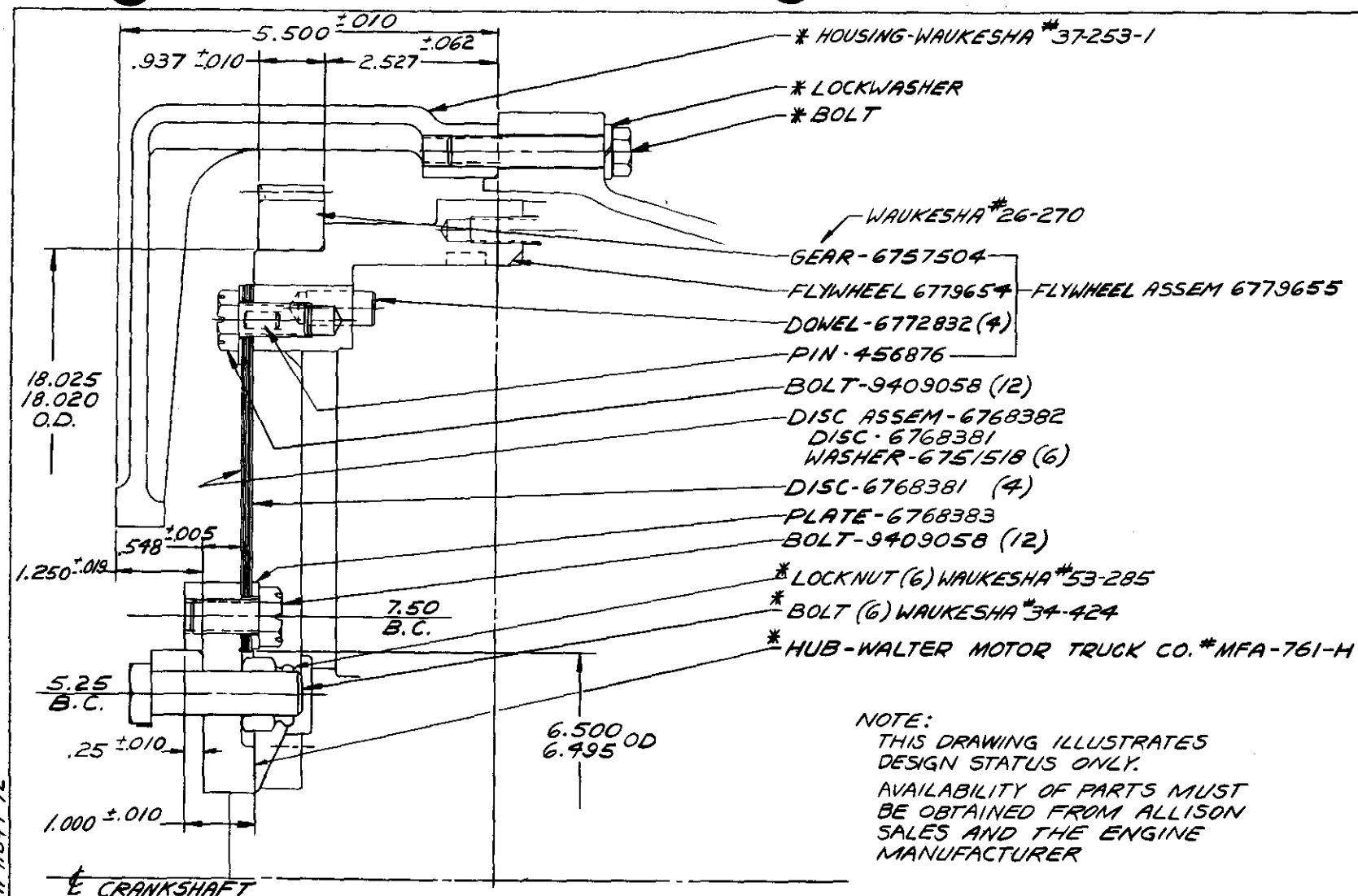

AS04-082

NOTE:
THIS DRAWING ILLUSTRATES DESIGN STATUS ONLY.
AVAILABILITY OF PARTS MUST BE OBTAINED FROM ALLISON SALES AND THE ENGINE MANUFACTURER

FOR CONVERTER DRIVE DATA NOT SHOWN SEE DWG. AS 00-001

BASIC INSTALLATION DWG. AS 51-003

* DENOTES PARTS NOT SUPPLIED WITH CONVERTER ASSEMBLY

REF. AS04-074 & WAUKESHA #H844-7E

CHANGES			
J			
H			
G			
F			
E			
D			
C			
B			
A			

DRAWN JOE CASEY 6-22-65	CHECKED A. S. HARPER 8-20-65	CHF. DRAFTSMAN Batner 8-20-65
SCALE FULL	PROJ. ENGR. ROBINSON 8-5-65	APPL. ENGR.

GM GENERAL MOTORS

Allison Torqmatic Drives

TITLE: WALTER MOTOR TRUCK REPOWER WAUKESHA "TH-884" PHYSICAL ADAPT.

MODEL TCL-500 | AS04-082

ALLISON DIVISION · GENERAL MOTORS CORPORATION · INDIANAPOLIS, INDIANA

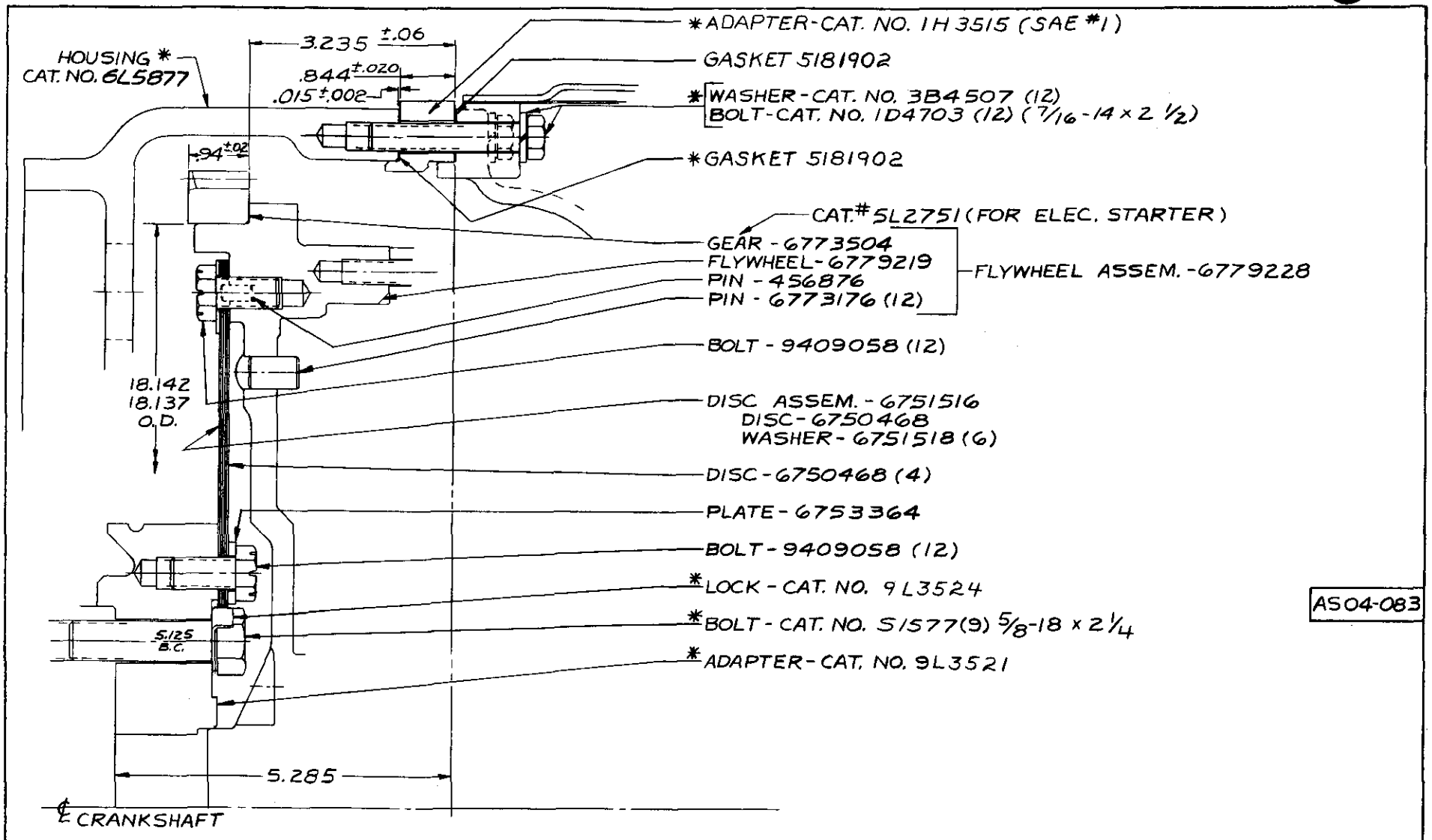

AS04-083

NOTE:
THIS DRAWING ILLUSTRATES DESIGN STATUS ONLY. AVAILABILITY OF PARTS MUST BE OBTAINED FROM ALLISON SALES AND ENGINE MFR.

FOR TRANSMISSION DRIVE DATA NOT SHOWN SEE DWG. AS 00-001

BASIC INSTALLATION DWG. AS 40-001 OR AS 44-001

* DENOTES PARTS NOT SUPPLIED WITH TRANSMISSION ASSEMBLY

CHANGES			
J			
H			
G			
F			
E			
D			
C			
B			
A	10-2-67	WAS 9L286 HSG	MK86

DR. MAN'S. L.R. HUNT	DSG. CHKD. DORAN	ENG. SUPERVISOR B. Erwin
6-10-65	6-25-65	6-25-65
SCALE FULL	PROJ. ENGR. ROBINSON 6-24-65	APPL. ENGR. UBC 6-15-65

GM GENERAL MOTORS

Allison TORQMATIC Drives

TITLE: CATERPILLAR "1673 & D-333" PHYSICAL ADAPT.

MODEL HT-70 & 4460 | AS04-083

ALLISON DIVISION - GENERAL MOTORS CORPORATION - INDIANAPOLIS, INDIANA

REF. AS 04-033

RS

STARTER GEAR	ENGINE MODEL
216 856 B	F8L 714 F6L 714
D0144-05-401.68	F10L 714 F12L 714

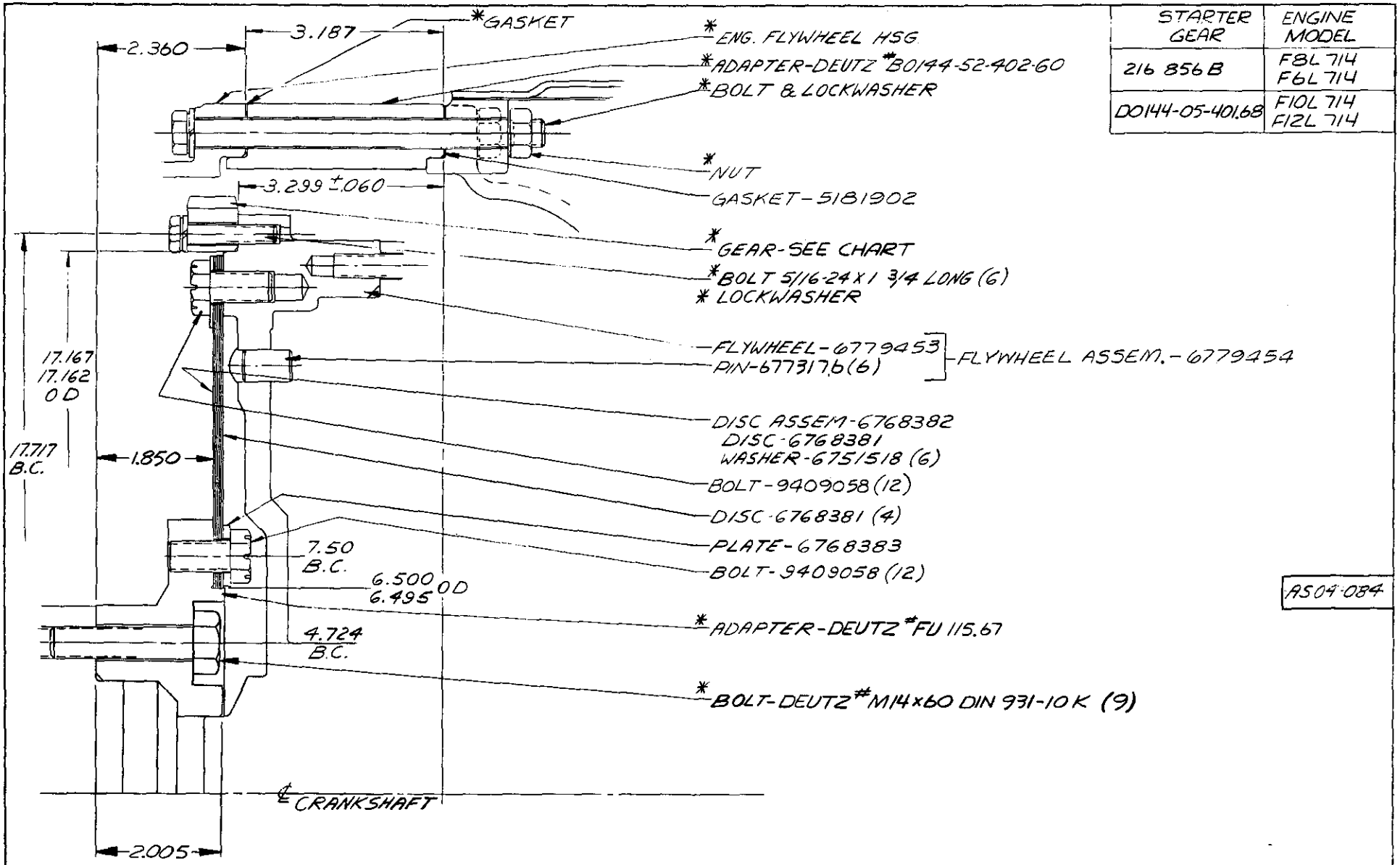

NOTE:
THIS DRAWING ILLUSTRATES DESIGN STATUS ONLY. AVAILABILITY OF PARTS MUST BE OBTAINED FROM ALLISON SALES AND ENGINE MFR.

FOR TRANSMISSION DRIVE DATA NOT SHOWN SEE DWG. AS00-001

BASIC INSTALLATION DWGS. - AS44-001, AS44-005 & AS40-001

* DENOTES PARTS NOT SUPPLIED WITH TRANSMISSION ASSEMBLY.

REF: AS04-064

CHANGES			
J			
H			
G			
F			
E			
D			
C			
B	8-23-65	677317.6 (6) WAS (12)	PO
A	1/7 APPR'D	SEE REV. NOTICE	BH HC

DRAWN	CHECKED	CHF. DRAFTSMAN
J.E. Cassidy	J.G.C.	R.A.T.
6-23-65	7-15-65	7-14-65
SCALE	PROJ. ENGR.	APPL. ENGR.
FULL	ROBINSON 6-28-65	WELCHER 6-28-65

GM GENERAL MOTORS

Allison TORQMATIC Drives

TITLE: DEUTZ "F6,8,10 AND 12.714" PHYSICAL ADAPT.

MODEL HT 70-4460 | AS04-084

ALLISON DIVISION - GENERAL MOTORS CORPORATION • INDIANAPOLIS, INDIANA •

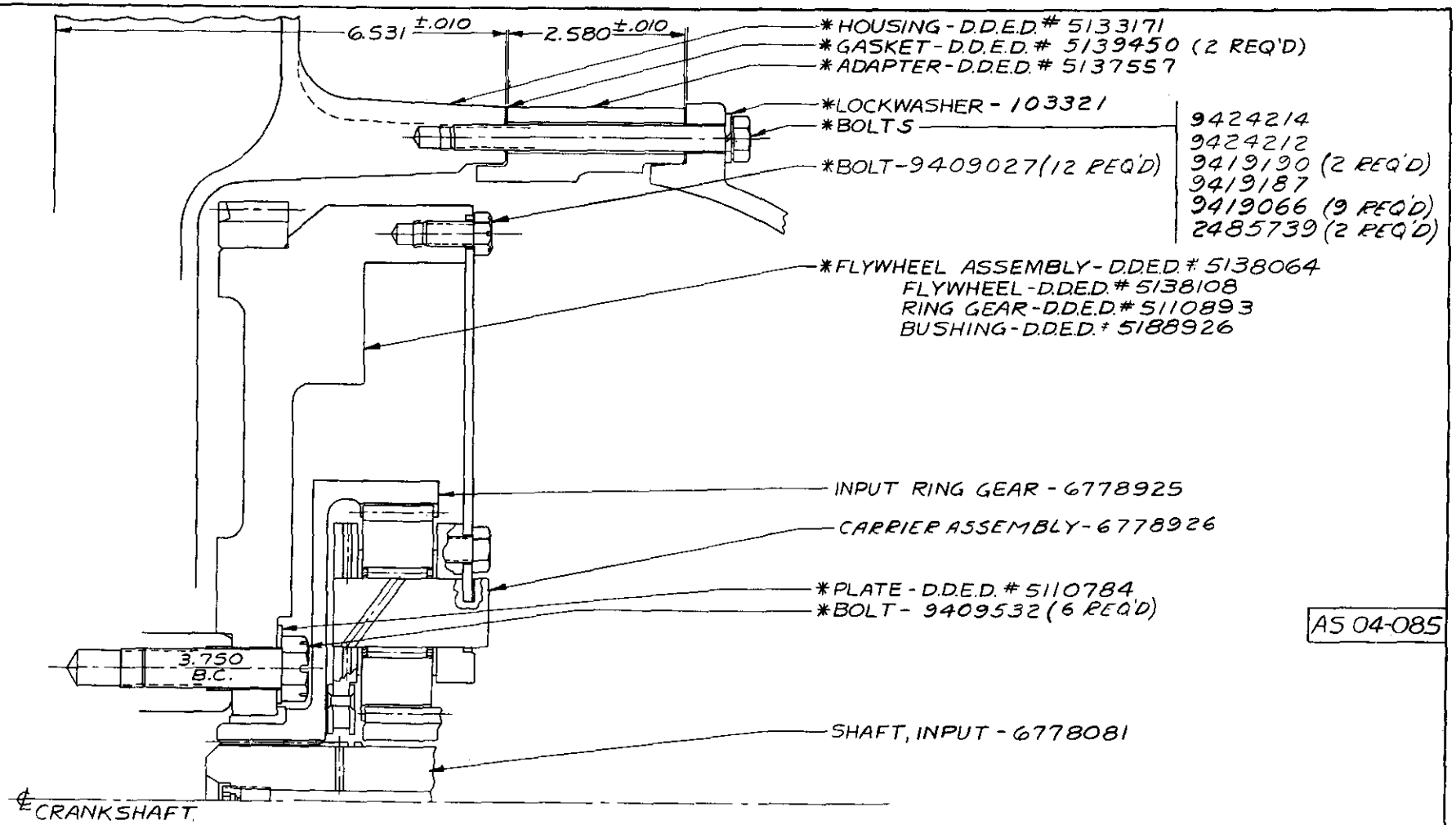

*DENOTES PARTS NOT SUPPLIED WITH TRANSMISSION ASSEMBLY

CHANGES			
J			
H			
G			
F			
E			
D			
C			
B			
A			

DRAWN	CHECKED	CHF. DRAFTSMAN
L.R. HUNT	DORAN	V.O. Betner
9-2-65	10-1-66	10-3-66
SCALE	PROJ. ENGR.	APPL. ENGR.
FULL	ROBINSON	WELCHER
	9-23-66	9-23-66

GM GENERAL MOTORS

Allison Torqmatic Drives

TITLE: DETROIT DIESEL "6V-71 PHYSICAL ADAPTATION

MODEL SUPER V-6 AS 04-085

ALLISON DIVISION - GENERAL MOTORS CORPORATION - INDIANAPOLIS, INDIANA

REF-L3-4096

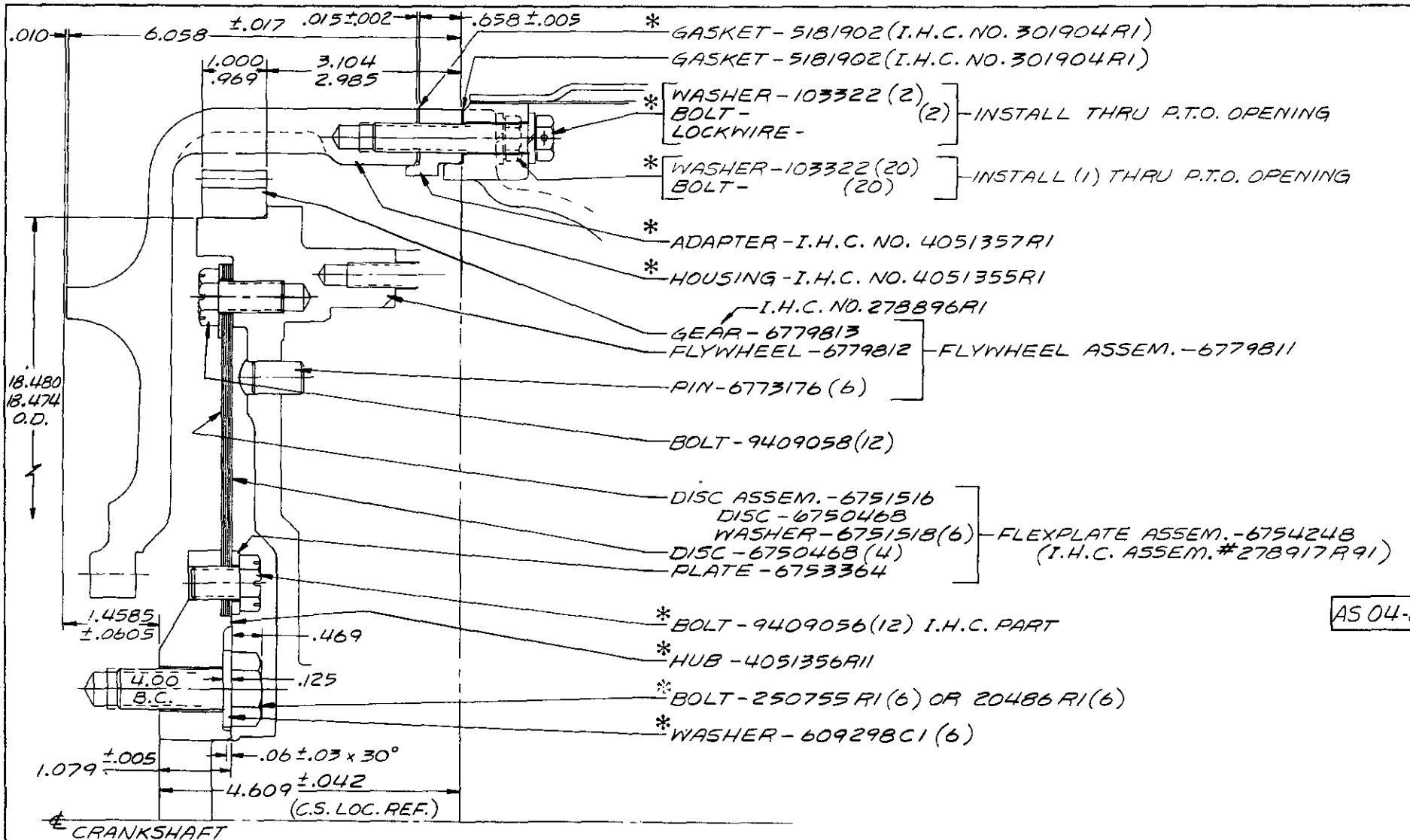

AS 04-086

BASIC INSTALLATION DRAWING
AS 44-001, AS 44-005 OR AS 40-001

FOR TRANSMISSION DRIVE DATA
NOT SHOWN SEE DRAWING AS 00-001

*DENOTES PARTS NOT SUPPLIED
WITH TRANSMISSION ASSEMBLY

NOTE: THIS DRAWING ILLUSTRATES
DESIGN STATUS ONLY. AVAILABILITY OF
PARTS MUST BE OBTAINED FROM ALLISON
SALES AND THE ENGINE MANUFACTURER.

A	12/23/75	P/N-6773176(6) WAS(12) HEX. PIN-US9874 FROM 1ST AND WITH INDEX PIN 1855R1	D. Hughes		
DRAWN		CHECKED		CHK. ENGR. APPROVAL	
D. Hughes		E. [illegible]		[illegible]	
9-10-65		9-20-65		9-21-65	
SCALE		PROJ. ENGR.		APPL. ENGR.	
FULL		Robinson		W. [illegible]	
		9-17-65		9-24-65	

GM GENERAL MOTORS

Allison TORQMATIC Drives

TITLE: INTERNATIONAL HARVESTER
UDT-429 AND UDT-573 PHYSICAL ADAPT.

MODEL 4460 & HT-70 | AS 04-086

ALLISON DIVISION - GENERAL MOTORS CORPORATION - INDIANAPOLIS, INDIANA

REF. I.H.C. #15K-30872 AS 04-004

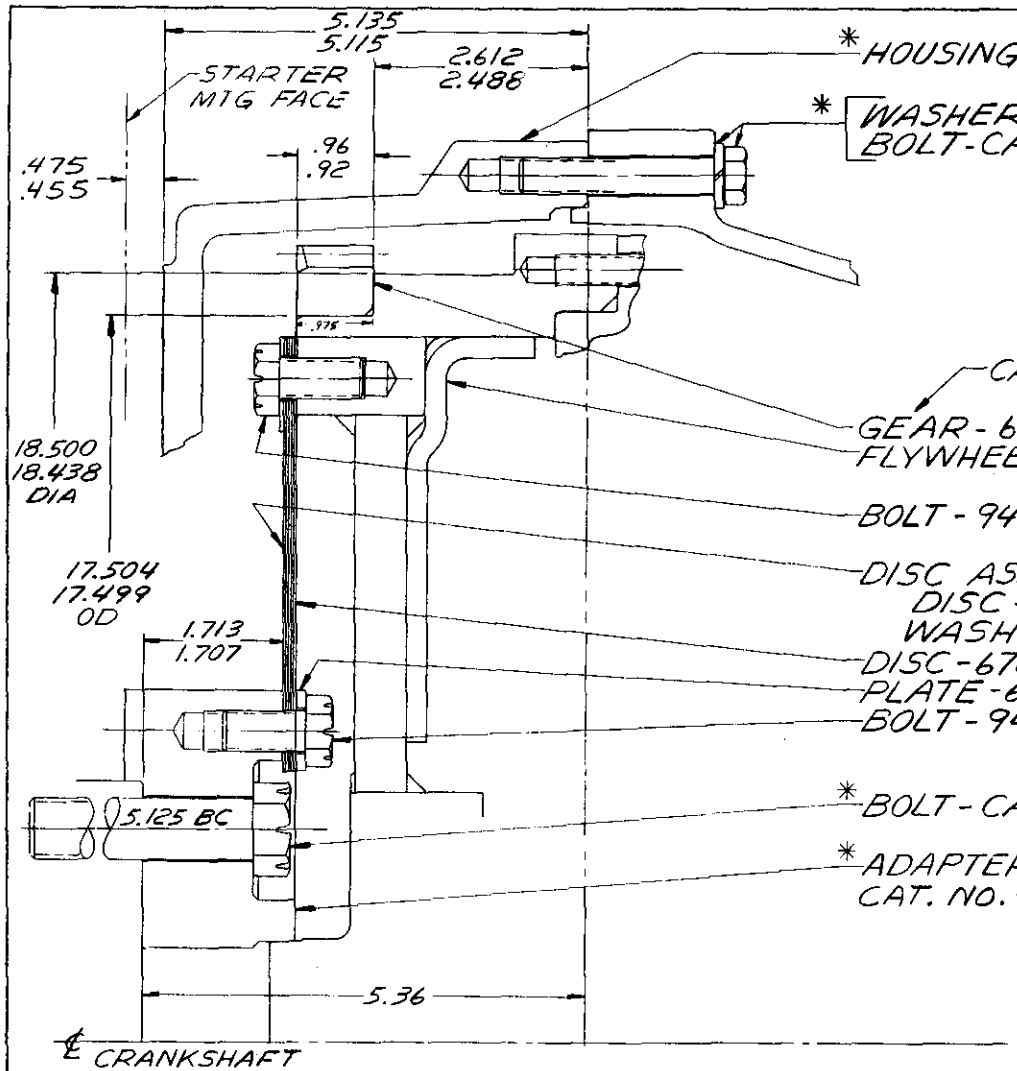

* HOUSING - CAT. NO. 9L5113

* WASHER - CAT. NO. 3B4507
BOLT - CAT. NO. 1D4703 (7/16-14 x 2 1/2)

CAT. NO. 6L4036

GEAR - 6830469
FLYWHEEL - 6830468
FLYWHEEL ASSY - 6830470

BOLT - 9409058 (12) (CAT. NO. 9L3658)

DISC ASSY - 6768382
DISC - 6768381
WASHER - 6751518 (6)

DISC - 6768381 (4)

PLATE - 6768383

BOLT - 9409058 (12) (CAT. NO. 9L3658)

AS04-088

* BOLT - CAT. NO. 9L3659 (9) (.750-16 X 4.50)

* ADAPTER - CAT. NO.
9L3661 FOR ENGINES BEFORE AND INCL S/N 94B675
9L4778 FOR ENG S/N 94B674 TO AND INCL S/N 94B3471
9L6019 FOR ENG LATER THAN AND INCL S/N 94B3472
9L4778 FOR D334 ENGINE ABOVE S/N 92B323

NOTE:
THIS DRAWING ILLUSTRATES DESIGN STATUS ONLY

AVAILABILITY OF PARTS MUST BE OBTAINED FROM ALLISON SALES AND THE ENGINE MFR

BASIC INSTALLATION DWG AS 51-003

FOR CONVERTER DRIVE DATA NOT SHOWN SEE DWG AS 00-001

* DENOTES PARTS NOT SUPPLIED WITH CONVERTER ASSEMBLY

CHANGES					
	J				
	H				
	G				
	F				
X	E	8-9-73	CS ADAPT NOS. REV	DH	YM
X	D	7-26-71	SEE REV NOTICE	DH	KM
X	C	11-3-69	SEE REV NOTICE	DN	HC
	B	6 MAR 69	SEE REV NOTICE	KS	WB
	A	2-2-66	SEE ENG CHG NOTICE	LH	KO

GM GENERAL MOTORS

Allison TORQMATIC Drives

DRAWN	CHECKED	CHF. DRAFTSMAN
HANCOCK 11-5-65	HAYWARD 11-23-65	Bettner 11-24-65
SCALE	PROJ. ENGR.	APPL. ENGR.
FULL	ROBINSON 11-10-65	WELCHER 11-11-65

TITLE: CATERPILLAR 1674 D334 PHYSICAL ADAPTATION

MODEL TC-500 AS04-088

ALLISON DIVISION · GENERAL MOTORS CORPORATION · INDIANAPOLIS, INDIANA ·

REF CAT. NO. 40-73698-01-04

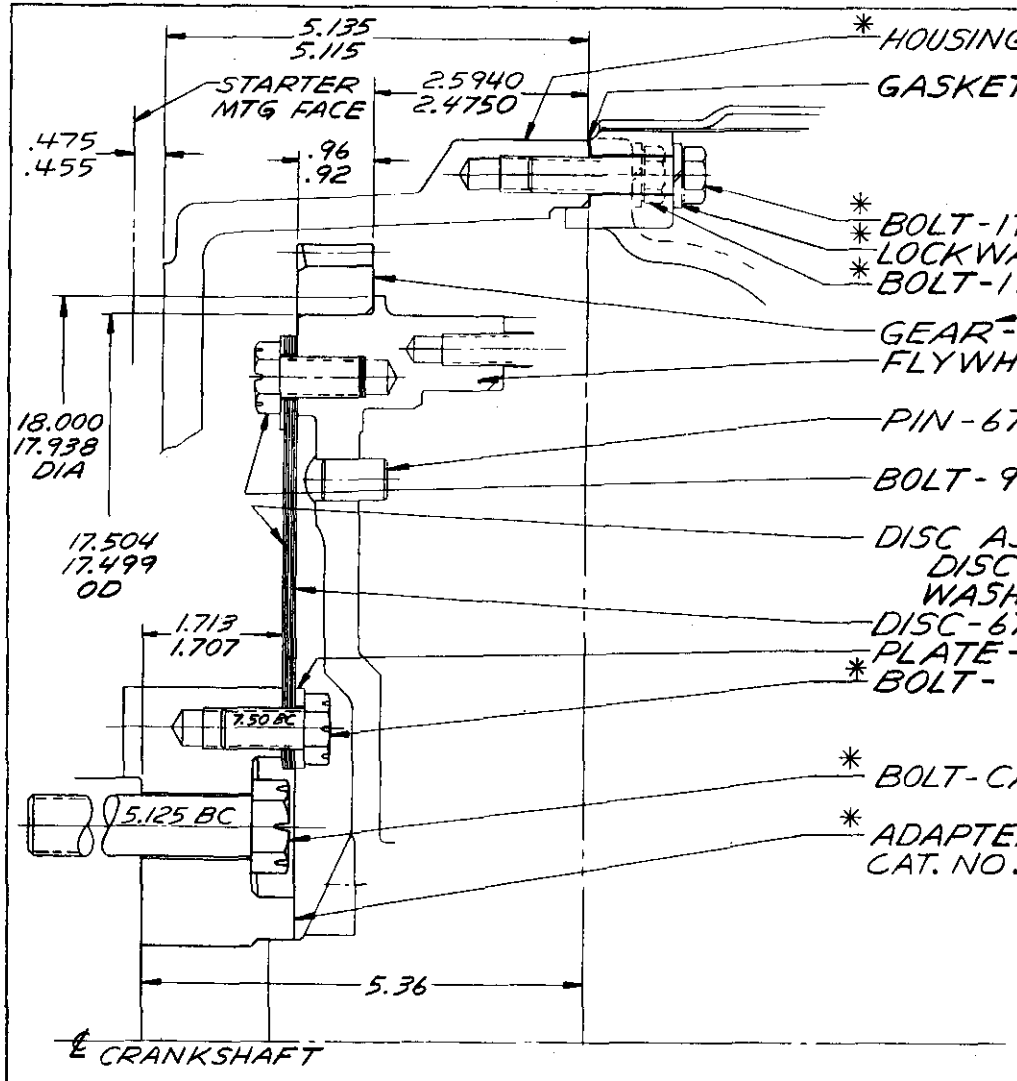

* HOUSING - CAT. NO. 9L5113

GASKET - 5181902 (WET HOUSINGS ONLY)

MODEL	QUANTITY	
	ITEM A	ITEM B
700 SERIES	—	22
4460/HT-70	2	20

* BOLT - ITEM A

* LOCKWASHER (22)

* BOLT - ITEM B

CAT. NO. 6L4036

GEAR - 6830469

FLYWHEEL - 6830629

PIN - 6773176 (12)

FLYWHEEL ASSY - 6830628

BOLT - 9409058 (12) (CAT. NO. 9L3658)

DISC ASSY - 6768382

DISC - 6768381

WASHER - 6751518 (6)

DISC - 6768381 (4)

PLATE - 6768383

* BOLT - (12) (CAT. NO. 618276)

* BOLT - CAT. NO. 4S9364 (.750-16 X 2.75 LG)

AS04-089

* ADAPTER - CAT. NO.
- 9L3661 FOR ENGINES BEFORE AND INCL S/N 94B675
- 9L4778 FOR ENG S/N 94B674 TO AND INCL S/N 94B3471
- 9L6019 FOR ENG LATER THAN AND INCL S/N 94B3472
- 9L4778 FOR D334 ENGINE ABOVE S/N 92B323

NOTE:
THIS DRAWING ILLUSTRATES DESIGN STATUS ONLY

AVAILABILITY OF PARTS MUST BE OBTAINED FROM DETROIT DIESEL ALLISON SALES AND THE ENGINE MANUFACTURER

BASIC INSTALLATION DWG:
700 SERIES AS45-030, AS45-031 AND AS45-032
4460/HT-70 AS44-001 AND AS44-005

FOR TRANSMISSION DRIVE DATA NOT SHOWN SEE DWG AS 00-001

* DENOTES PARTS NOT SUPPLIED WITH TRANSMISSION ASSEMBLY

CHANGES				
J				
H				
G				
F	2-22-74	REV DWG NOS. ADD CHART	DH	JM
E	8-9-73	CS ADAPT NOS. REV	DH	JM
D	7-26-71	SEE REV NOTICE	DH	JM
C	11-3-69	SEE REV NOTICE	DN	HC
B	6MAR69	SEE REV NOTICE	KS	[illegible]
A	6-7-66	WAS .385-.365	VB	RH

DRAWN	CHECKED	CHF. DRAFTSMAN
HANCOCK	KING	Betner
12-13-65	1-4-66	1-4-66
SCALE	PROJ. ENGR.	APPL. ENGR.
FULL		

GM GENERAL MOTORS

Allison TORQMATIC Drives

TITLE: CATERPILLAR 1674/D334 PHYSICAL ADAPTATION

MODEL 700 SERIES AND 4460/HT-70 AS04-089

ALLISON DIVISION · GENERAL MOTORS CORPORATION · INDIANAPOLIS, INDIANA ·

REF AS04-088

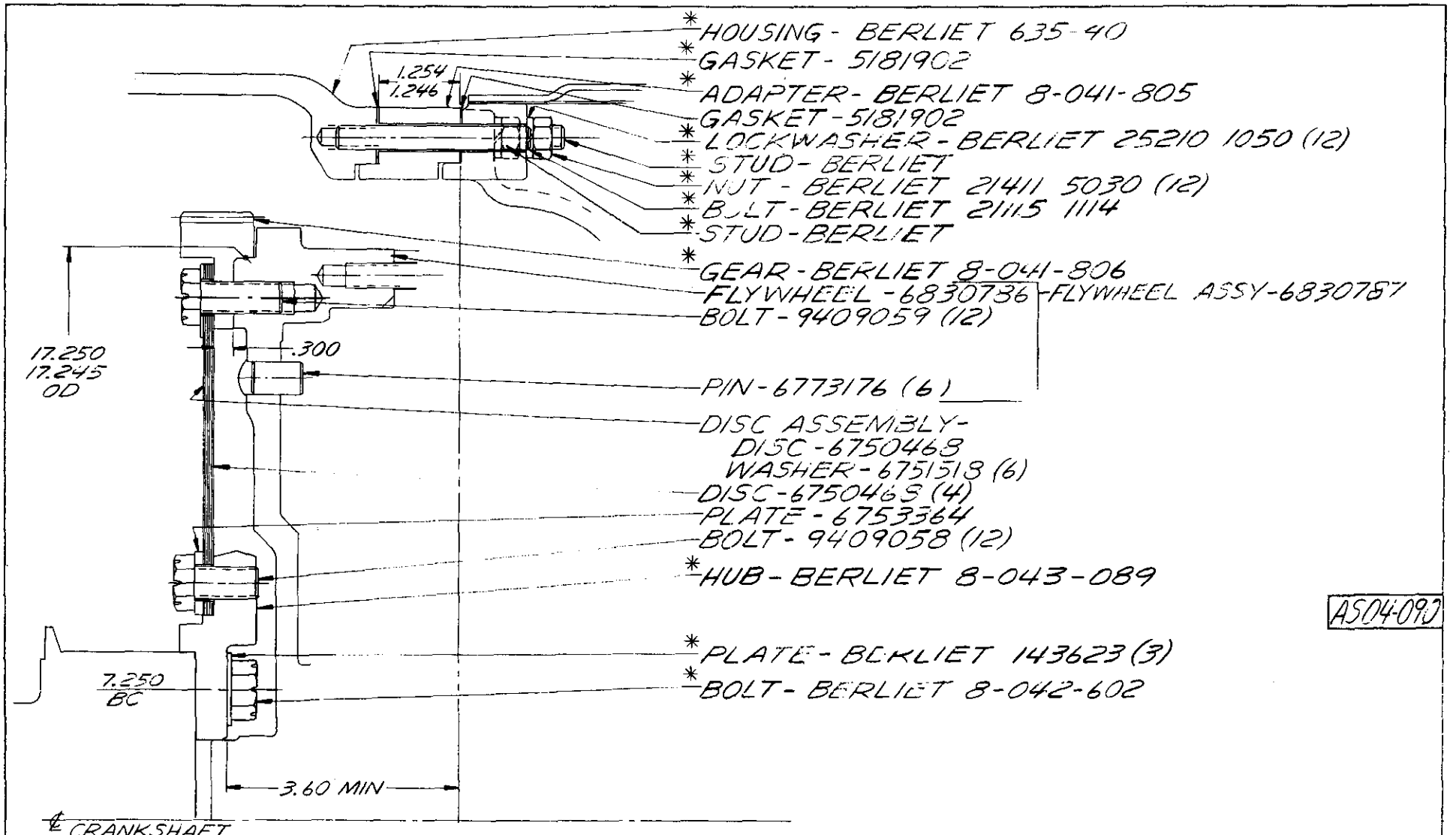

NOTE:
THIS DRAWING ILLUSTRATES DESIGN STATUS ONLY
AVAILABILITY OF PARTS MUST BE OBTAINED FROM ALLISON SALES AND ENGINE MFR

FOR TRANSMISSION DRIVE DATA NOT SHOWN SEE DWG AS 00-001

BASIC INSTALLATION DWG
4460 = AS 44-001 OR
AS 44-005
HT-70 = AS 40-001

* DENOTES PARTS NOT SUPPLIED WITH TRANSMISSION ASSEMBLY.

SUITABLE FOR DRY CONVERTER HOUSING TRANSMISSIONS ONLY

CHANGES					
A	12/23/75	PIN-6773176(6) WAS (12) REM 456384 FROM FLYWHEEL ASSY AND REM PIN 456876 FROM HUB ASSY	D D H	HAH	
DRAWN HANCOCK 3-4-66	CHECKED KING 4-1-66	CHF. DRAFTSMAN Pouce 4-7-66			
SCALE FULL	PROJ. ENGR. [illegible]	APPL. ENGR.			

GM GENERAL MOTORS

Allison TORQMATIC Drives

TITLE: BERLIET "635-40" PHYSICAL ADAPT.

MODEL 4460 OR HT-70 | AS04-090

ALLISON DIVISION · GENERAL MOTORS CORPORATION · INDIANAPOLIS, INDIANA ·

REF BERLIET DWG NO. 8.041.804

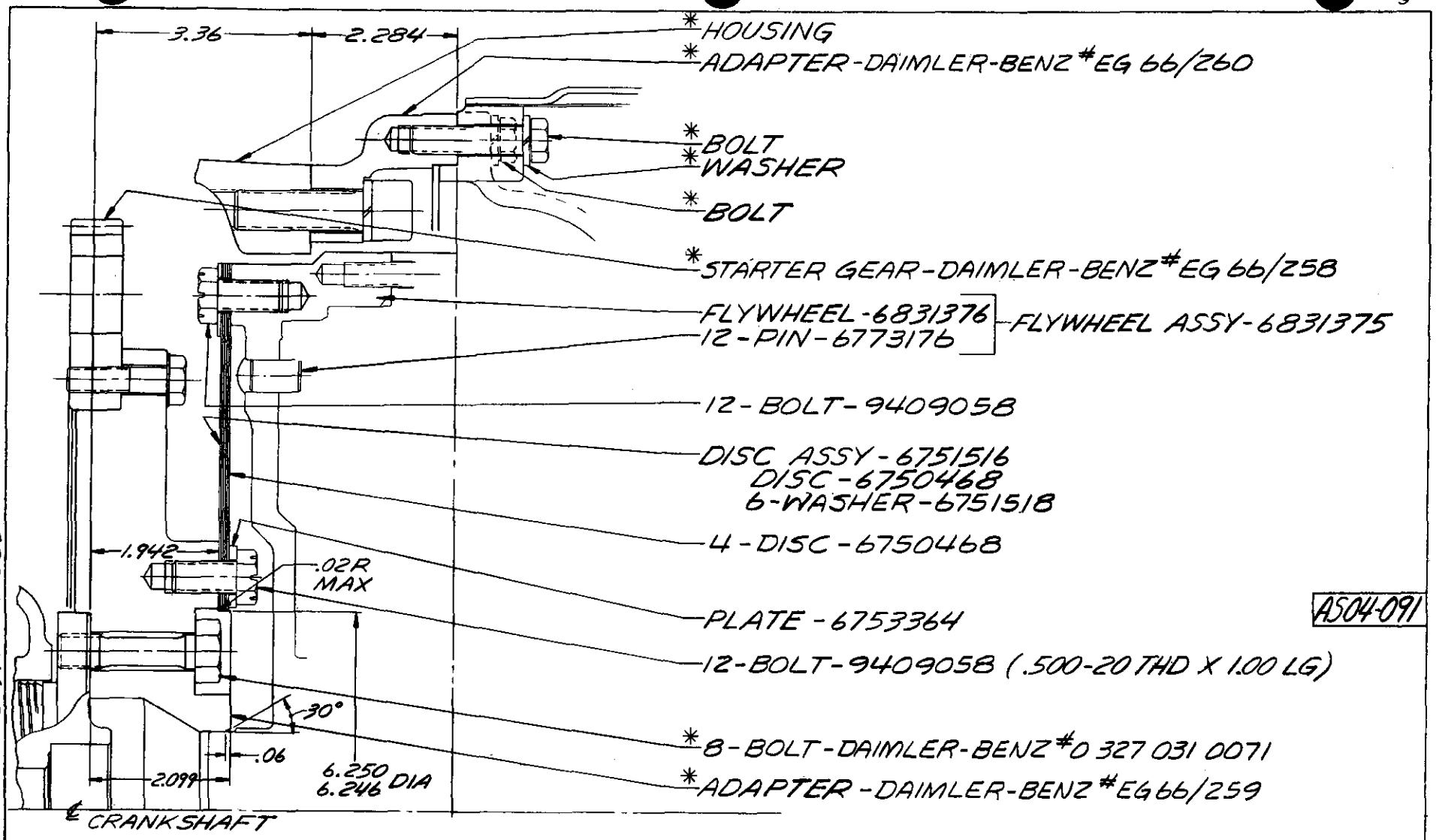

NOTE
THIS DRAWING ILLUSTRATES DESIGN STATUS ONLY AVAILABILITY OF PARTS MUST BE OBTAINED FROM ALLISON SALES AND ENGINE MFR

FOR TRANSMISSION DRIVE DATA NOT SHOWN SEE DWG AS 00-001

BASIC INSTALLATION DWG-
HT-70 AS 40-001
4460 AS 44-001 & AS 44-005

* DENOTES PARTS NOT SUPPLIED WITH TRANSMISSION ASSEMBLY.

THIS ADAPTATION SUITABLE FOR DRY CONVERTER HOUSING TRANSMISSIONS ONLY

CHANGES			
J			
H			
G			
F			
E			
D			
C			
B			
A			

DRAWN	CHECKED	CHF. DRAFTSMAN
HANCOCK 5-6-66	HAYWARD 5/12/66	Batner 5-12-66
SCALE FULL	PROJ. ENGR.	APPL. ENGR. ROBINSON 5-11-66

GM GENERAL MOTORS

Allison TORQMATIC Drives

TITLE: DAIMLER-BENZ OM346 PHYSICAL ADAPT

MODEL HT-70 AND 4460 AS04-091

ALLISON DIVISION · GENERAL MOTORS CORPORATION · INDIANAPOLIS, INDIANA

REF EG 66/115, 346.010.02.01, AS04-083

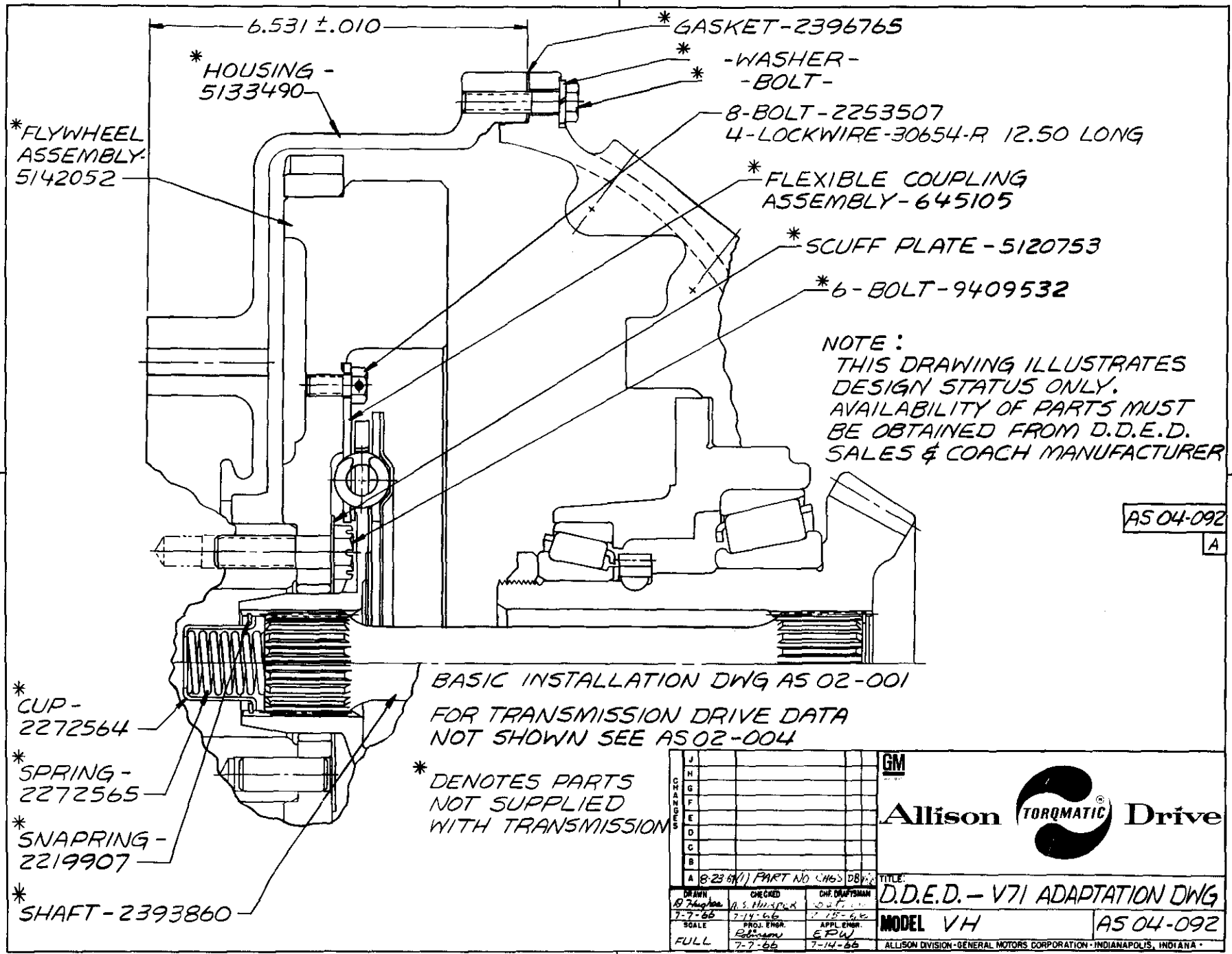

CHANGES		
J		
H		
G		
F		
E		
D		
C		
B		
A	8-23-66	PART NO. CHGS DB

GM

Allison TORQMATIC® Drive

TITLE: D.D.E.D. – V71 ADAPTATION DWG

DRAWN	CHECKED	CHF. DRAFTSMAN
R Hughes 7-7-66	A.S. Hinkle 7-14-66	[illegible] 7-15-66
SCALE	PROJ. ENGR.	APPL. ENGR.
FULL	Johnson 7-7-66	EPW 7-14-66

MODEL VH

AS 04-092

ALLISON DIVISION-GENERAL MOTORS CORPORATION-INDIANAPOLIS, INDIANA

FORM 852 C (REV. 6/65)

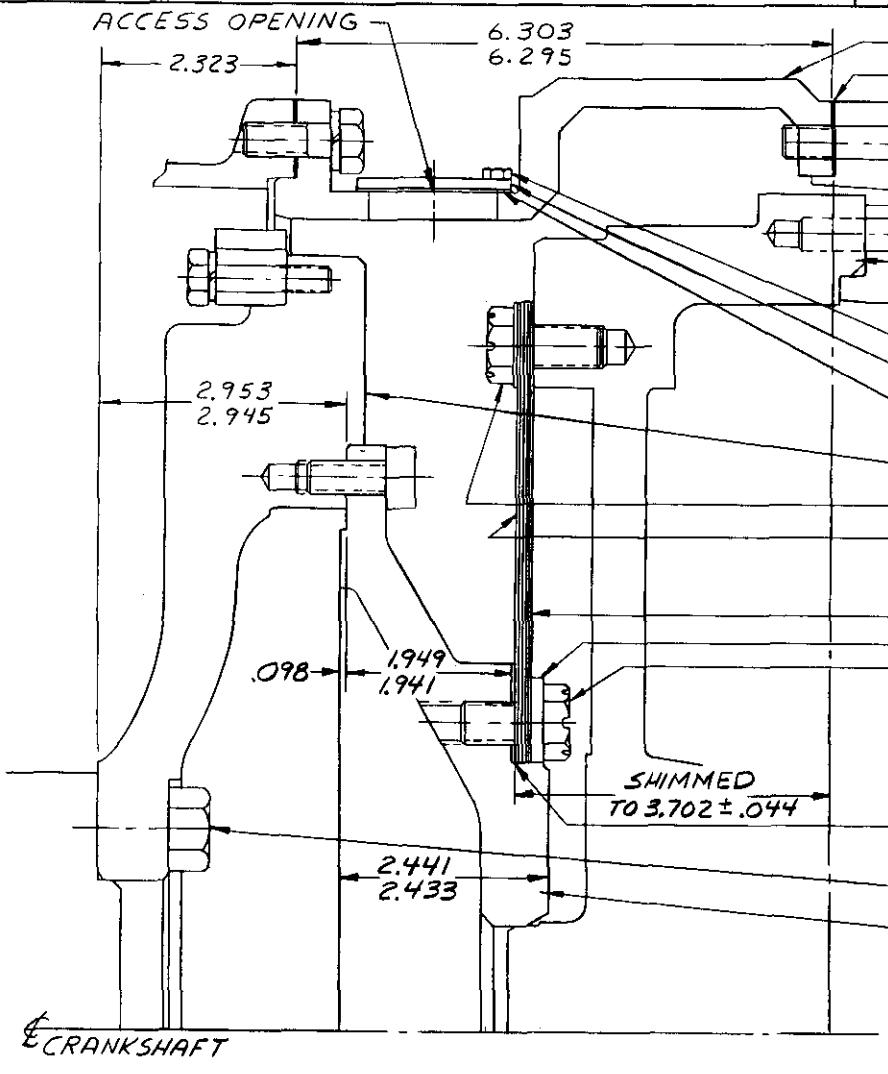

* ADAPTER - DEUTZ NO. 181945
* GASKET - DEUTZ NO. 5181902
* (22) BOLT DEUTZ
* (22) WASHER DEUTZ
FLYWHEEL - 6768916
* (4) BOLT DEUTZ
* COVER DEUTZ ANF NO. 182145
* GASKET DEUTZ ANF NO. 182146
* FLYWHEEL DEUTZ ANF NO. A0144-05-401
(12) BOLT - 9409058
DISC ASSEM. - 6751516
DISC - 6750468
(6) WASHER - 6751518
(4) DISC - 6750468
PLATE - 6753364
(12) BOLT - 9409058

AS04-094

* SHIM DEUTZ NO. ANF 181946
(.039-.118 THICK AS REQ'D)
* (9) BOLT DEUTZ
* HUB - DEUTZ NO. ANF 181944

NOTE:
THIS DRAWING ILLUSTRATES DESIGN STATUS ONLY
AVAILABILITY OF PARTS MUST BE OBTAINED
FROM ALLISON SALES AND ENGINE
MANUFACTURER

BASIC INSTALLATION DWG. AS 56-003

FOR TRANSMISSION DRIVE DATA NOT
SHOWN SEE DWG. AS 00-001

* DENOTES PARTS NOT SUPPLIED
WITH TRANSMISSION ASSEMBLY

REF AS04-036 ANF*181943

CHANGES			
J			
H			
G			
F			
E			
D			
C			
B			
A			

DR'AWN	CHK'D	CHF DRAFTSMAN
SHRAKE 7-22-66	KING 16 Oct 68	Pursley 17 Oct 68
SCALE	PROJ. ENGR.	APPL. ENGR.
FULL		Robinson 25 Aug 68

GM

Allison TORQMATIC® Drive

TITLE: DEUTZ F8L-714 "PHYSICAL ADAPT.

MODEL CRT 5631 | AS04-094

ALLISON DIVISION · GENERAL MOTORS CORPORATION · INDIANAPOLIS, INDIANA

FORM 852 C (REV. 6-65)

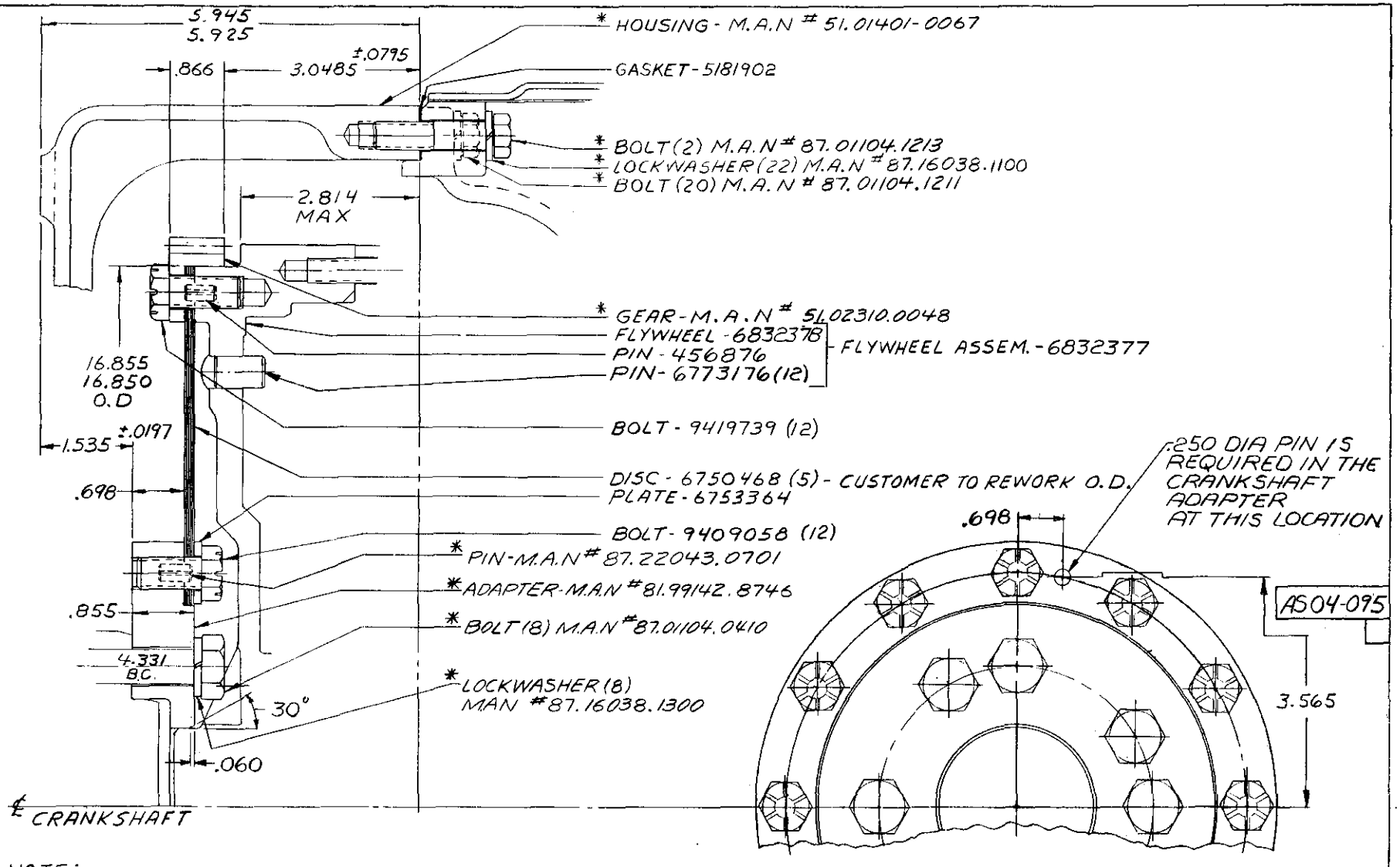

VIEW LOOKING INTO CRANKSHAFT ADAPTER

NOTE:
THIS DRAWING ILLUSTRATES DESIGN STATUS ONLY.
AVAILABILITY OF PARTS MUST BE OBTAINED FROM ALLISON SALES AND THE ENGINE MANUFACTURER

FOR TRANSMISSION DRIVE DATA NOT SHOWN SEE AS 00-001
BASIC INSTALLATION DWG. AS 40-001

* DENOTES PARTS NOT SUPPLIED WITH TRANSMISSION ASSEMBLY.

CHANGES			
J			
H			
G			
F			
E			
D			
C			
B			
A			

DRAWN	CHK'D	CHK'D DRAFTSMAN
SNRAKE	BENNETT	VR Bishop
9-1-66	10-3-66	10-4-66
SCALE	PROJ. ENGR.	APPL. ENGR.
FULL	W.B. CLARK	ROBINSON
	9-27-66	9-27-66

GM GENERAL MOTORS

Allison TORQMATIC Drives

TITLE: M.A.N. D2156HM3 PHYSICAL ADAPT.

MODEL HT-70 | AS04-095

ALLISON DIVISION · GENERAL MOTORS CORPORATION · INDIANAPOLIS, INDIANA

REF AS04-078 M.A.N. # 81.99142.8652 AND # 81.99142.8646

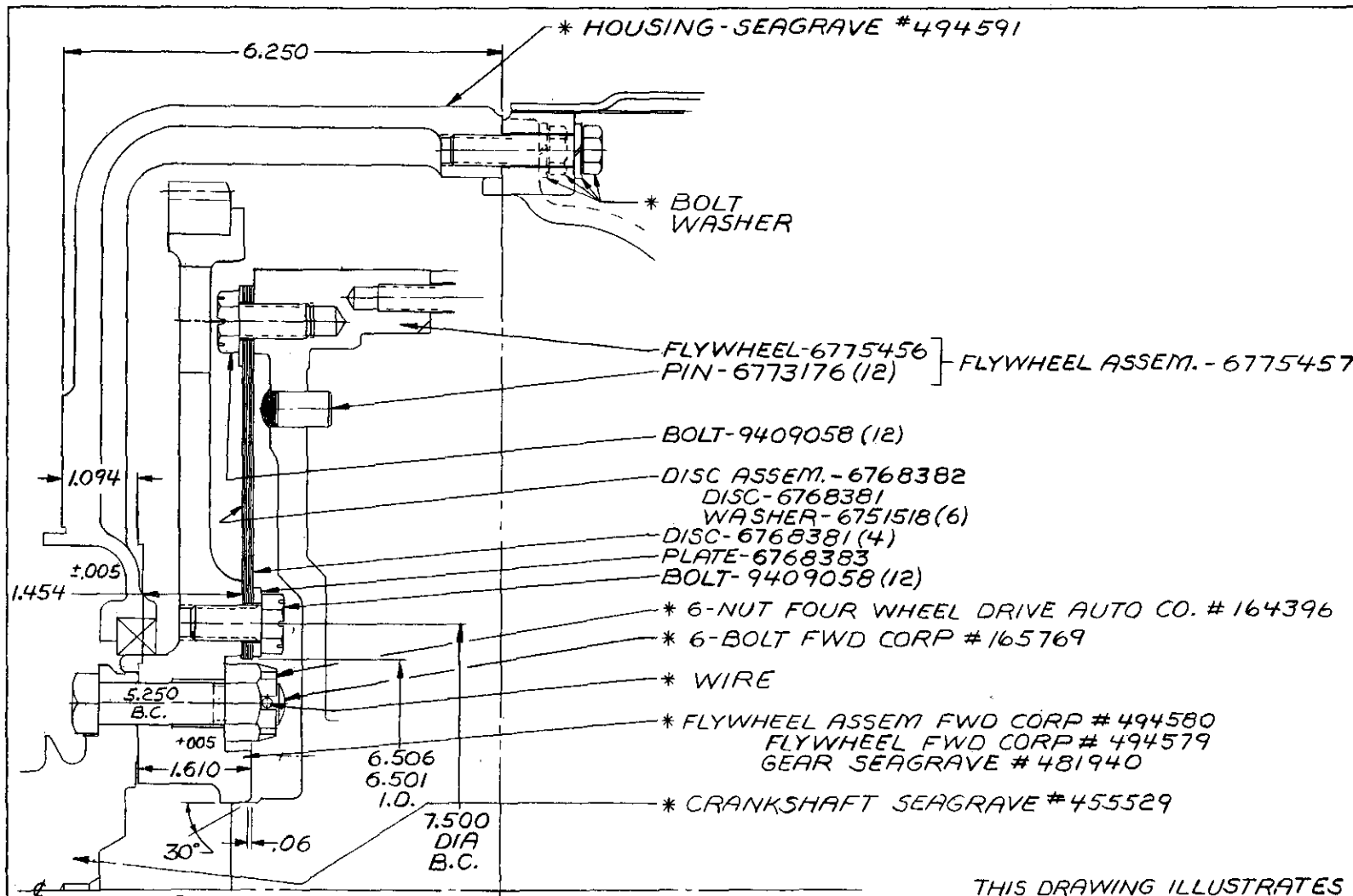

AS 04-096

BASIC INSTALLATION DWG. AS40-001 (HT70)
BASIC INSTALLATION DWG. AS44-001 (4460)

FOR TRANSMISSION DRIVE DATA NOT SHOWN SEE DWG AS 00-001

* DENOTES PARTS NOT SUPPLIED WITH TRANSMISSION ASSEMBLY

THIS ADAPTATION HAS PROVISION FOR "DRY" FLYWHEEL HOUSING ONLY

THIS DRAWING ILLUSTRATES DESIGN STATUS ONLY. AVAILABILITY OF PARTS MUST BE OBTAINED FROM ALLISON SALES AND THE ENGINE MANUFACTURER

REF SEAGRAVE #455614

CHANGES			
J			
H			
G			
F			
E			
D			
C			
B			
A			

DRAWN	CHECKED	CHF. DRAFTSMAN
F. HELD	DORAN	Parsley
1-11-67	5-25-67	25 May 67
SCALE	PROJ. ENGR.	APPL. ENGR.
FULL		DL ROBINSON 5-19-67

GM GENERAL MOTORS

Allison TORQMATIC Drives

TITLE: SEAGRAVE "906" PHYSICAL ADAPT.

MODEL HT-70-4460 AS 04-096

ALLISON DIVISION · GENERAL MOTORS CORPORATION · INDIANAPOLIS, INDIANA ·

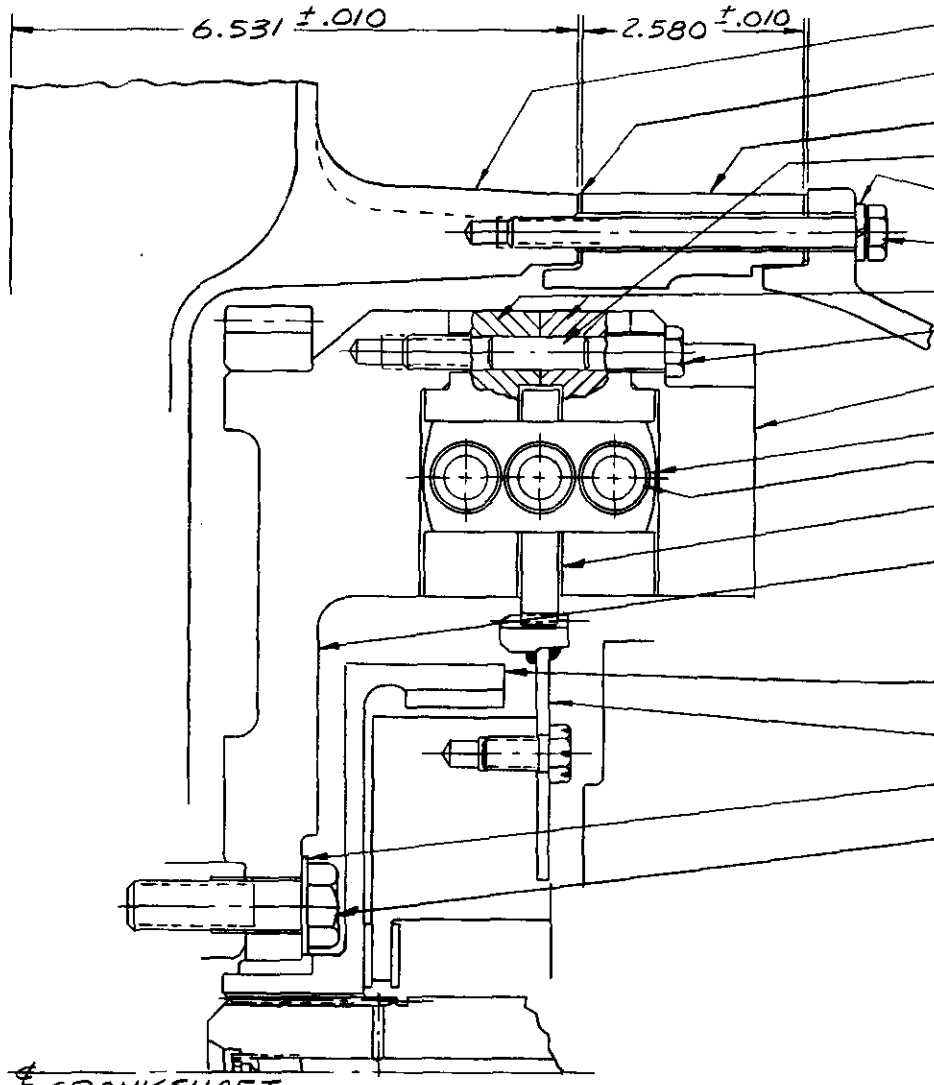

QTY	PART NO.
1	9424214
1	9424212
2	9419190
1	9419187
9	9419066
2	2485739

NOTE
THIS DRAWING ILLUSTRATES DESIGN STATUS ONLY. AVAILABILITY OF PARTS MUST BE OBTAINED FROM ALLISON SALES AND THE ENGINE MANUFACTURER

* DENOTES PARTS NOT SUPPLIED WITH TRANSMISSION ASSEMBLY

REF - GMT & C DIV. LAYOUT MD 5118

AS04-097

CHANGES				
J				
H				
G				
F				
E				
D				
C				
X B	8-20-71	SEE REV NOTICE	KS	
A	24 JAN 68	SEE REV NOTICE		

DRAWN	CHECKED	CHF. DRAFTSMAN
D Hughes 11-6-67	KING 20 SEP 68	VOB 20 SEP 67
SCALE FULL	PROJ. ENGR. CBU 14 AUG 68	APPL. ENGR. ROBINSON 22 AUG 68

GM

Allison TORQMATIC® Drive

TITLE: DETROIT DIESEL 8V-71 PHYSICAL ADAPTATION

MODEL VS 2-8 | AS 04-097

ALLISON DIVISION · GENERAL MOTORS CORPORATION · INDIANAPOLIS, INDIANA

FORM 852 C (REV. 4/68)

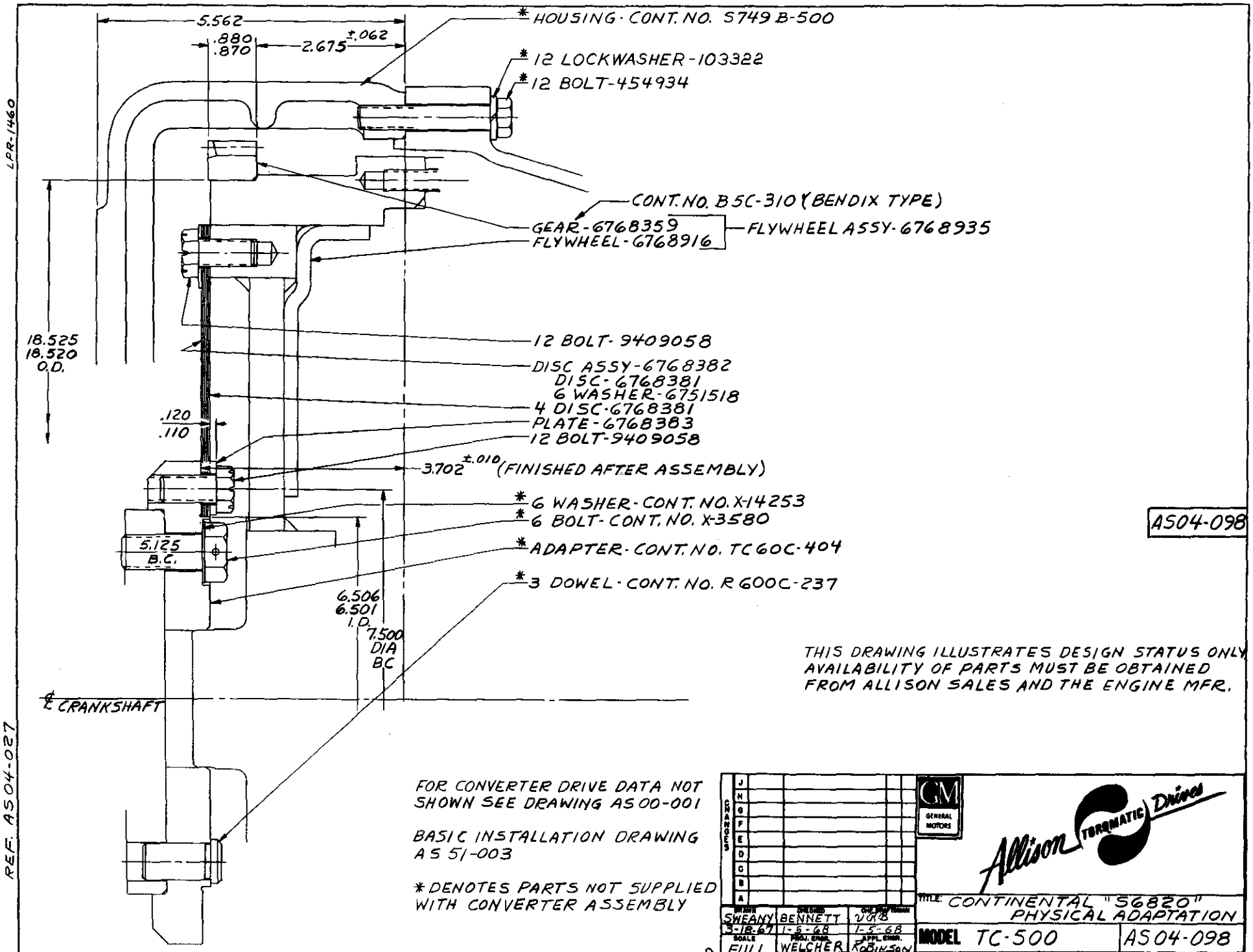

AS04-098

THIS DRAWING ILLUSTRATES DESIGN STATUS ONLY
AVAILABILITY OF PARTS MUST BE OBTAINED
FROM ALLISON SALES AND THE ENGINE MFR.

FOR CONVERTER DRIVE DATA NOT
SHOWN SEE DRAWING AS00-001

BASIC INSTALLATION DRAWING
AS 51-003

* DENOTES PARTS NOT SUPPLIED
WITH CONVERTER ASSEMBLY

CHANGES	DRAWN	CHECKED	ENGR. APPROVAL
J			
H			
G			
F			
E			
D			
C			
B			
A	SWEANY 3-18-67	BENNETT 1-5-68	VAS 1-5-68
SCALE FULL		PROJ. ENGR. WELCHER 3-27-67	APPL. ENGR. ROBINSON 3-27-67

GM GENERAL MOTORS

Allison TORQMATIC Drives

TITLE: CONTINENTAL "S6820" PHYSICAL ADAPTATION

MODEL TC-500 | AS04-098

ALLISON DIVISION · GENERAL MOTORS CORPORATION · INDIANAPOLIS, INDIANA

LPR-1460

REF. AS04-027

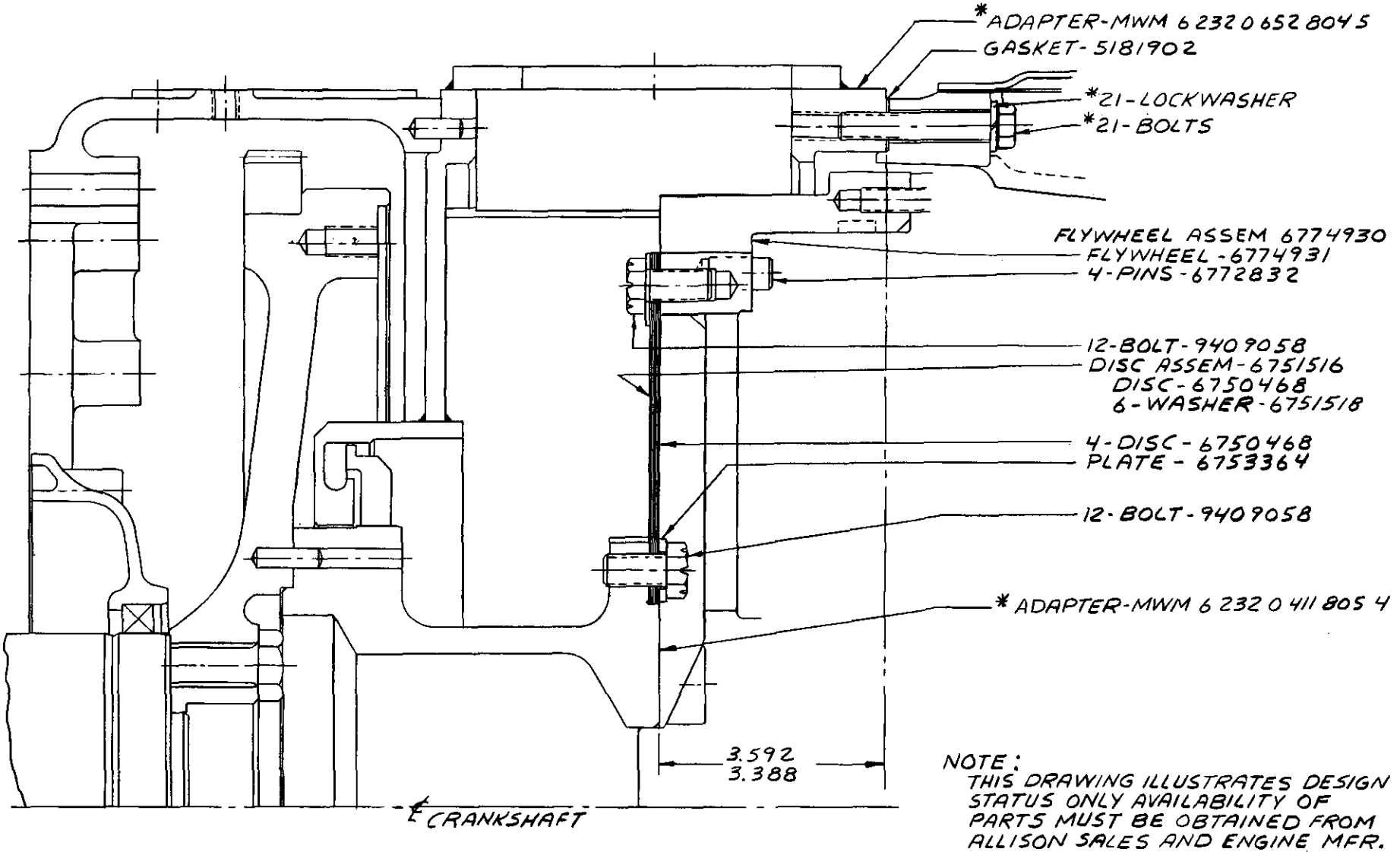

NOTE:
THIS DRAWING ILLUSTRATES DESIGN STATUS ONLY AVAILABILITY OF PARTS MUST BE OBTAINED FROM ALLISON SALES AND ENGINE MFR.

FOR TRANSMISSION DRIVE DATA NOT SHOWN SEE DWG AS 00-001

BASIC INSTALLATION DWG AS 58-029 OR AS 58-031

* DENOTES PARTS NOT SUPPLIED WITH TRANSMISSION ASSEMBLY

REF AS 04-055, MWM PART NO. 6-232-0-000-6013

DRAWN SHRAKE 11-15-67	CHECKED KING 2-26-68	ENG RELEASE VAB 2-27-68	GM Allison TORQMATIC® Drive
SCALE FULL	PROJ. ENGR. WELCHER 2-5-68	APPL. ENGR. ROBINSON	TITLE: MWM "TD 232-12" PHYSICAL ADAPT.
			MODEL CLBT 5960 | AS04-099
			ALLISON DIVISION · GENERAL MOTORS CORPORATION · INDIANAPOLIS, INDIANA

CHANGES: J H G F E D C B A

R

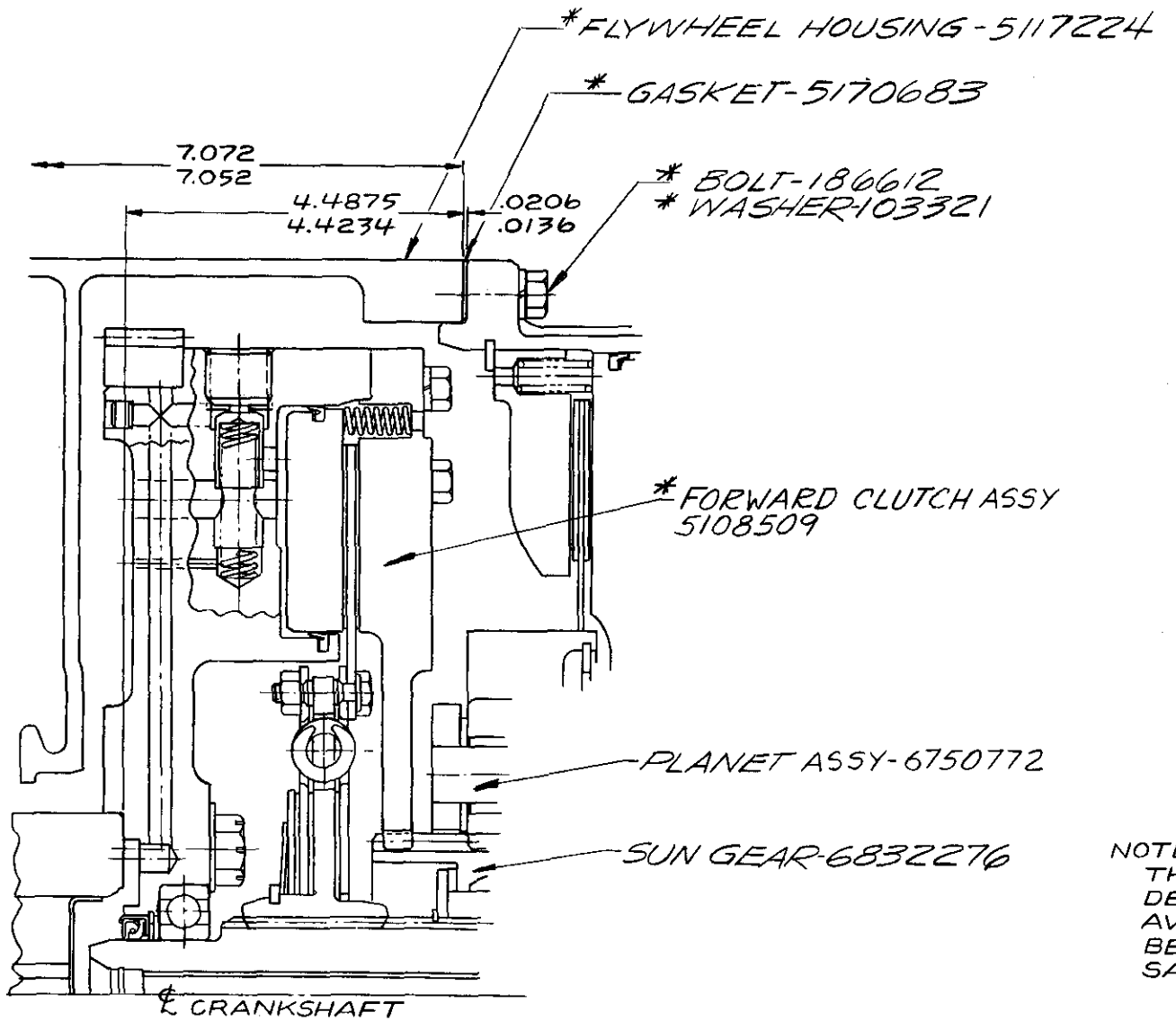

AS04-102

NOTE
THIS DRAWING ILLUSTRATES DESIGN STATUS ONLY
AVAILABILITY OF PARTS MUST BE OBTAINED FROM ALLISON SALES AND THE ENGINE MFR

BASIC INSTALLATION DWG
M = AS 01-002 AND AS 01-003
MH = AS 01-004

* DENOTES PARTS NOT SUPPLIED WITH TRANSMISSION ASSEMBLY

REF AS 04-014

CHANGES			
J			
H			
G			
F			
E			
D			
C			
B			
A			

DRAWN	CHECKED	CHF. DRAFTSMAN
11-15-67	11 NOV 68	11 NOV 68
SCALE FULL	PROJ. ENGR.	APPL. ENGR.

GM
Allison TORQMATIC Drive

TITLE DETROIT DIESEL V-71
PHYSICAL ADAPT

MODEL M AND MH | AS04-102

ALLISON DIVISION · GENERAL MOTORS CORPORATION · INDIANAPOLIS, INDIANA

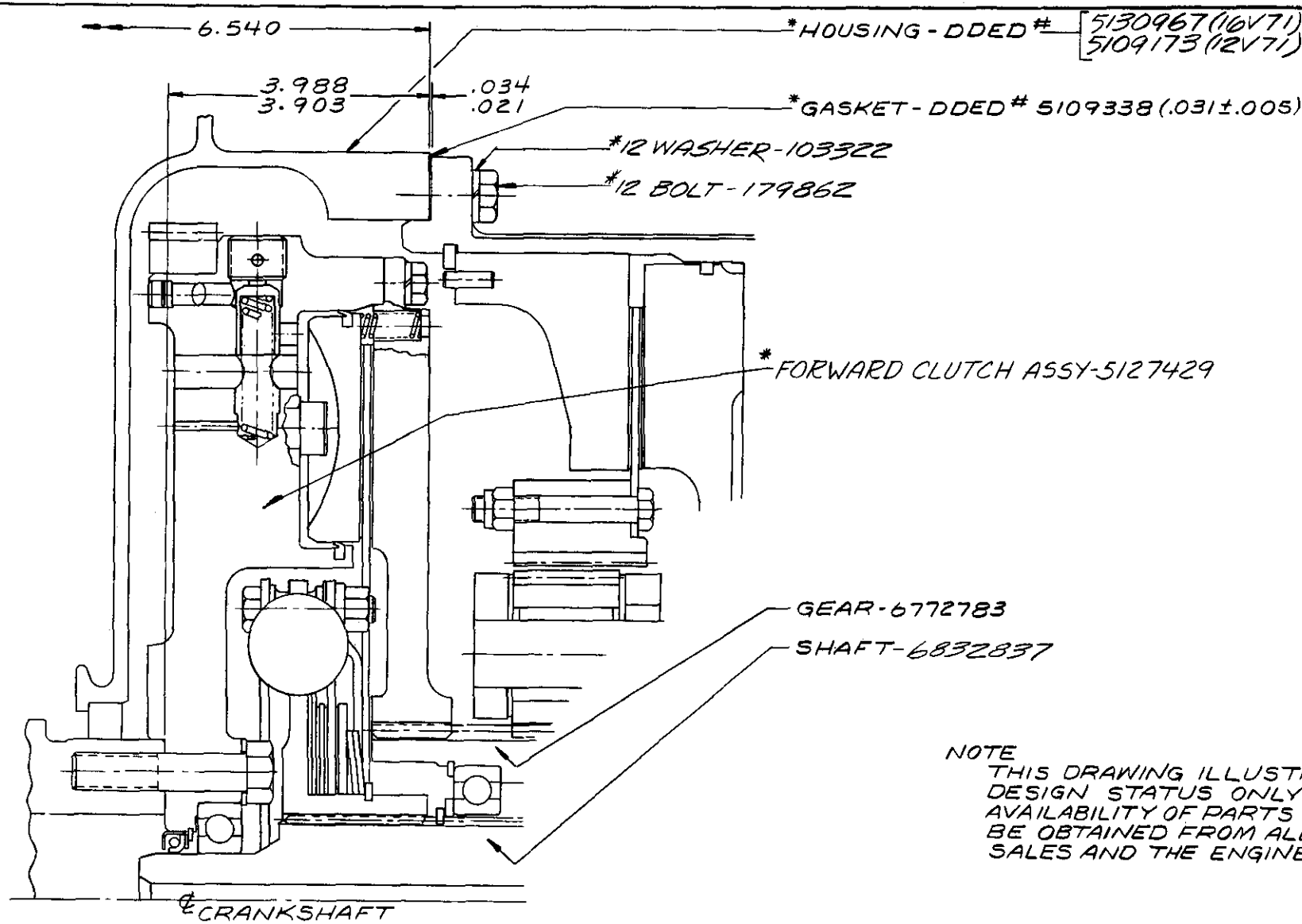

AS 04-103

NOTE
THIS DRAWING ILLUSTRATES DESIGN STATUS ONLY AVAILABILITY OF PARTS MUST BE OBTAINED FROM ALLISON SALES AND THE ENGINE MFR

BASIC INSTALLATION DWG.
AS 01-005

* DENOTES PARTS NOT SUPPLIED WITH TRANSMISSION ASSEMBLY

REF AS 04-102 DDED LAYOUT L-11465-R

CHANGES			
J			
H			
G			
F			
E			
D			
C			
B			
A			

DRAWN	CHECKED	CHF. DRAFTSMAN
11-21-67	11 NOV 68	11 NOV 68
SCALE	PROJ. ENGR.	APPL. ENGR.
FULL		8 NOV 68

GM

Allison TORQMATIC® Drive

TITLE: DETROIT DIESEL V-71 PHYSICAL ADAPT

MODEL MS

AS 04-103

ALLISON DIVISION · GENERAL MOTORS CORPORATION · INDIANAPOLIS

ITEM	LOCK UP CLUTCH	NO LOCK UP CLUTCH
A	6770911	—
B	6770891	6768918
C	6772832	—

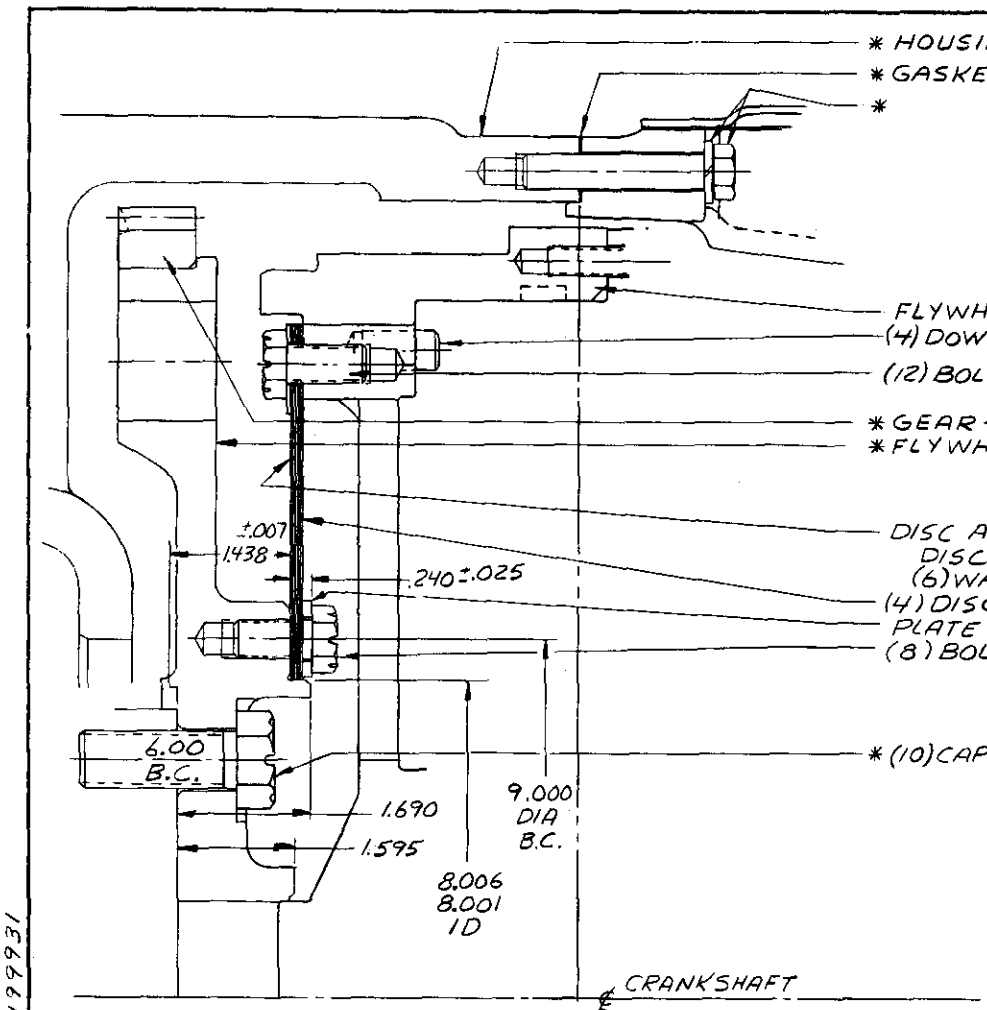

AS04-110

NOTE:
THIS DRAWING ILLUSTRATES DESIGN STATUS ONLY
AVAILABILITY OF PARTS MUST BE OBTAINED FROM DETROIT DIESEL ALLISON SALES AND THE ENGINE MFR

FOR TRANSMISSION DRIVE DATA NOT SHOWN SEE DRAWING AS 00-001

BASIC INSTALLATION DRAWING AS 58-029 OR AS 58-031

* DENOTES PARTS NOT SUPPLIED WITH TRANSMISSION ASSEMBLY

REF CUMMINS 196299, 199931

CHANGES					
A	7/2/76	PART NO. 213052 WAS 67479-B, REM LOCKWIRE	D H	E	

GM GENERAL MOTORS

Allison TORQMATIC Drives

DRAWN	CHECKED	CHK. DRAFTSMAN
SHRAKE 21 OCT 68	KING 7 NOV 68	VAC 7 NOV 68
SCALE FULL	PROJ. ENGR.	APPL. ENGR. ROBINSON 30 OCT 68

TITLE: CUMMINS V, VT, VTA 1710 (PHASE III) PHYSICAL ADAPTATION

MODEL 5000-6000 SERIES AS04-110

ALLISON DIVISION · GENERAL MOTORS CORPORATION · INDIANAPOLIS, INDIANA ·

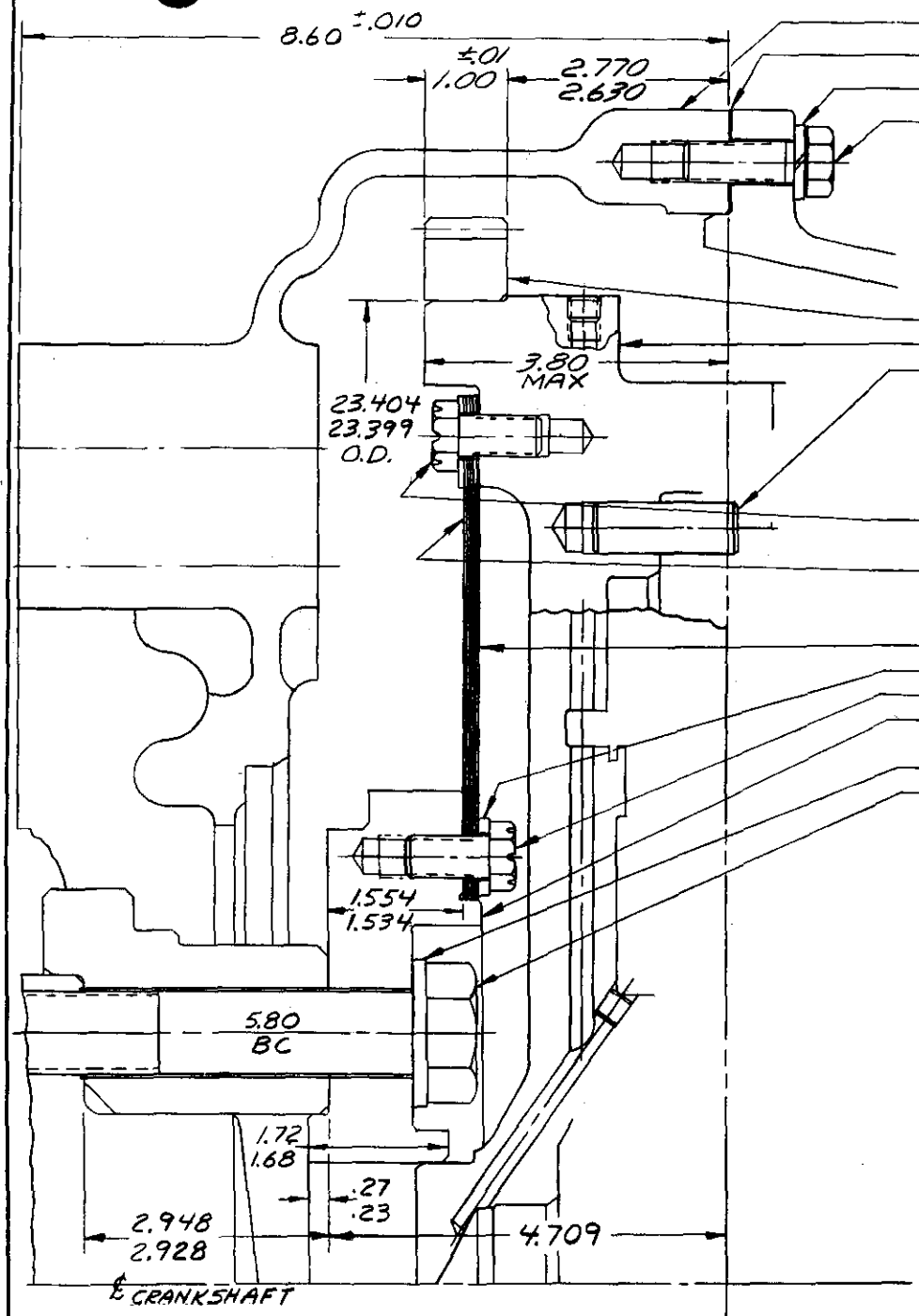

* HOUSING-CAT. NO. IN8277
* GASKET - 6777693
* 16 - LOCKWASHER-CAT. NO. 3B4508
* 16-BOLT - CAT. NO. S 1585

* CAT. NO. 554199
GEAR - 6839217
FLYWHEEL - 6839216 — FLYWHEEL ASSY - 6839215
8 - PIN - 6776328
2 - PLUG - 444682
2 - PIN - 6777242

12-BOLT - 9409058 (CAT. NO. 9L3658)

DISC ASSEM. - 6778661
DISC - 6778662
6-WASHER - 6778663
5- DISC - 6778662
PLATE - 6777689
12 - BOLT - 9409058 (CAT. NO. 9L3658)
* HUB CAT. NO. 2N1329

* 9-WASHER CAT. NO. 5F6562
* 9-BOLT CAT. NO. 8F6124

AS04-111

FOR TRANSMISSION DRIVE DATA NOT SHOWN SEE DWG. AS 00-021

BASIC INSTALLATION DWG. AS80-001

* DENOTES PARTS NOT SUPPLIED WITH TRANSMISSION ASSEMBLY

NOTE:
THIS DRAWING ILLUSTRATES DESIGN STATUS ONLY AVAILABILITY OF PARTS MUST BE OBTAINED FROM DETROIT DEISEL ALLISON SALES AND THE ENGINE MFR.

CHANGES	DRAWN	CHECKED	ENGR. RESPONSIBLE
J, H, G, F, E, D, C, B, A	SHRAKE 15 NOV 68	EHLMANN 5-22-72 PROJ. ENGR.	Moyer 5-23-72 APPL. ENGR.
	SCALE FULL		J.A. M. Emmer 5-18-72

GM GENERAL MOTORS

Allison TORQMATIC Drives

TITLE: CATERPILLAR D348-E225 PHYSICAL ADAPT

MODEL DP 8000 | AS04-111

ALLISON DIVISION-GENERAL MOTORS CORPORATION-INDIANAPOLIS, INDIANA

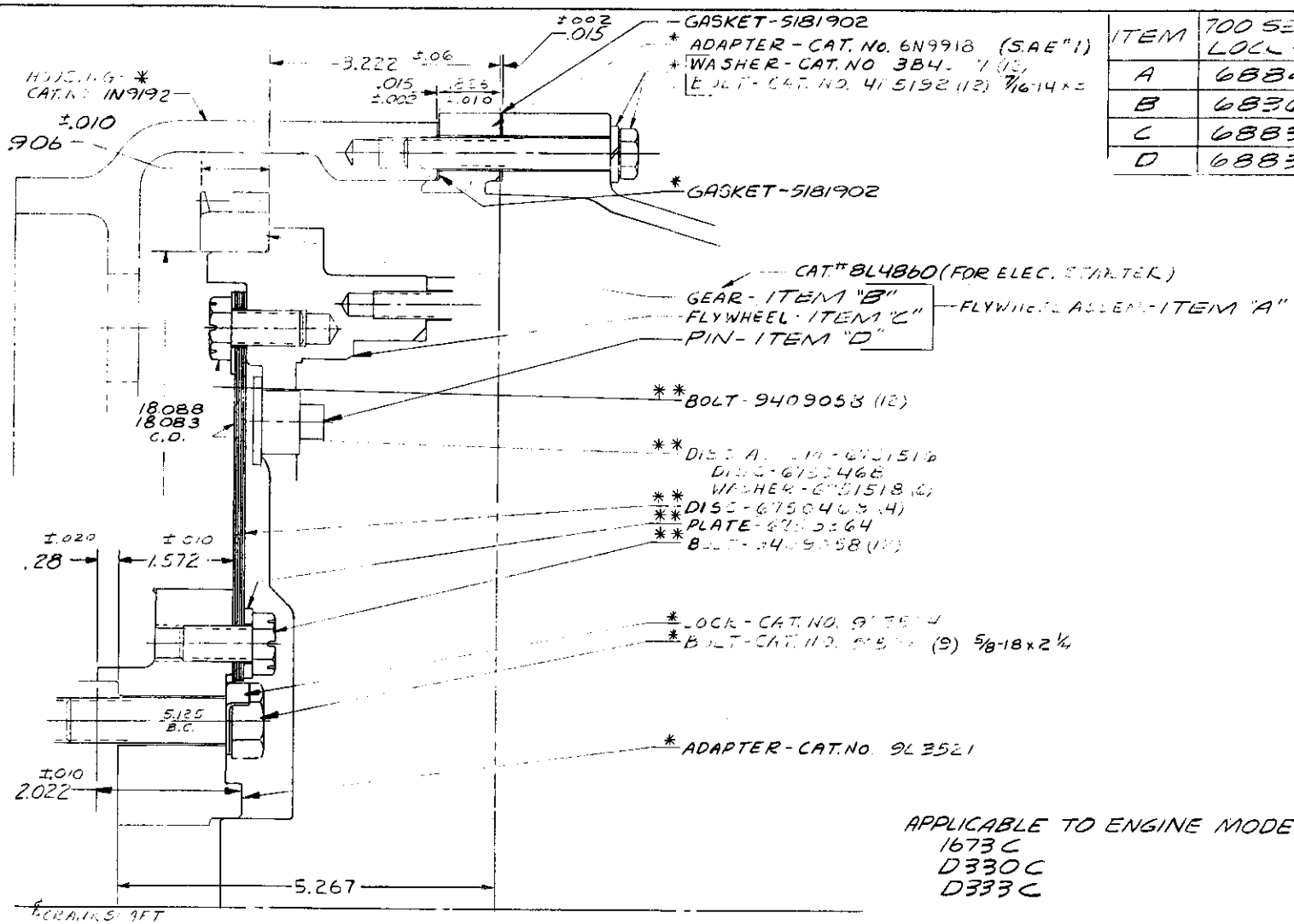

ITEM	700 SERIES LOCK-UP	TC-400 NO LOCK-UP
A	6884576	6836566
B	6836565	6836565
C	6883917	6836564
D	6883915	NONE

AS 04-114

APPLICABLE TO ENGINE MODELS
1673C
D330C
D333C

APPLICABLE TO 3306/700 SERIES WITHOUT PIN TIMING FEATURE

NOTE:
THIS DRAWING ILLUSTRATES DESIGN STATUS ONLY. AVAILABITY OF PARTS MUST BE OBTAINED FROM ALLISON SALES AND THE ENGINE MANUFACTURER

1ST. CONVERTER DRIVE DATA NOT SHOWN SEE DWG. AS 00-001

BASIC INSTALLATION DWG. AS 01-003

* DENOTES PARTS NOT SUPPLIED WITH TC-400 CONVERTER ASSEMBLY

* OR ** DENOTES PARTS NOT SUPPLIED WITH 700 SERIES TRANSMISSION ASSEMBLY

CHANGES				
J				
H				
G				
F				
E				
D				
C				
B	11-9-77	ADDED TABLE REV. NOTES		
A	2-8-77			

GM GENERAL MOTORS

Allison TORQMATIC Drives

DRAWN	CHECKED	CHF. DRAFTSMAN
D. NEW	HIGGINS	
10 OCT 68	11-6-69	
SCALE	PROJ. ENGR.	APPL. ENGR.
FULL	MUELLER	LEWIS
	10-3-69	10-3-69

TITLE: CATERPILLAR "C" SERIES PHYSICAL ADAPT.

MODEL TC-400/700 SERIES AS 04-114

ALLISON DIVISION - GENERAL MOTORS CORPORATION - INDIANAPOLIS, INDIANA

AS 04-033, AS 04-033

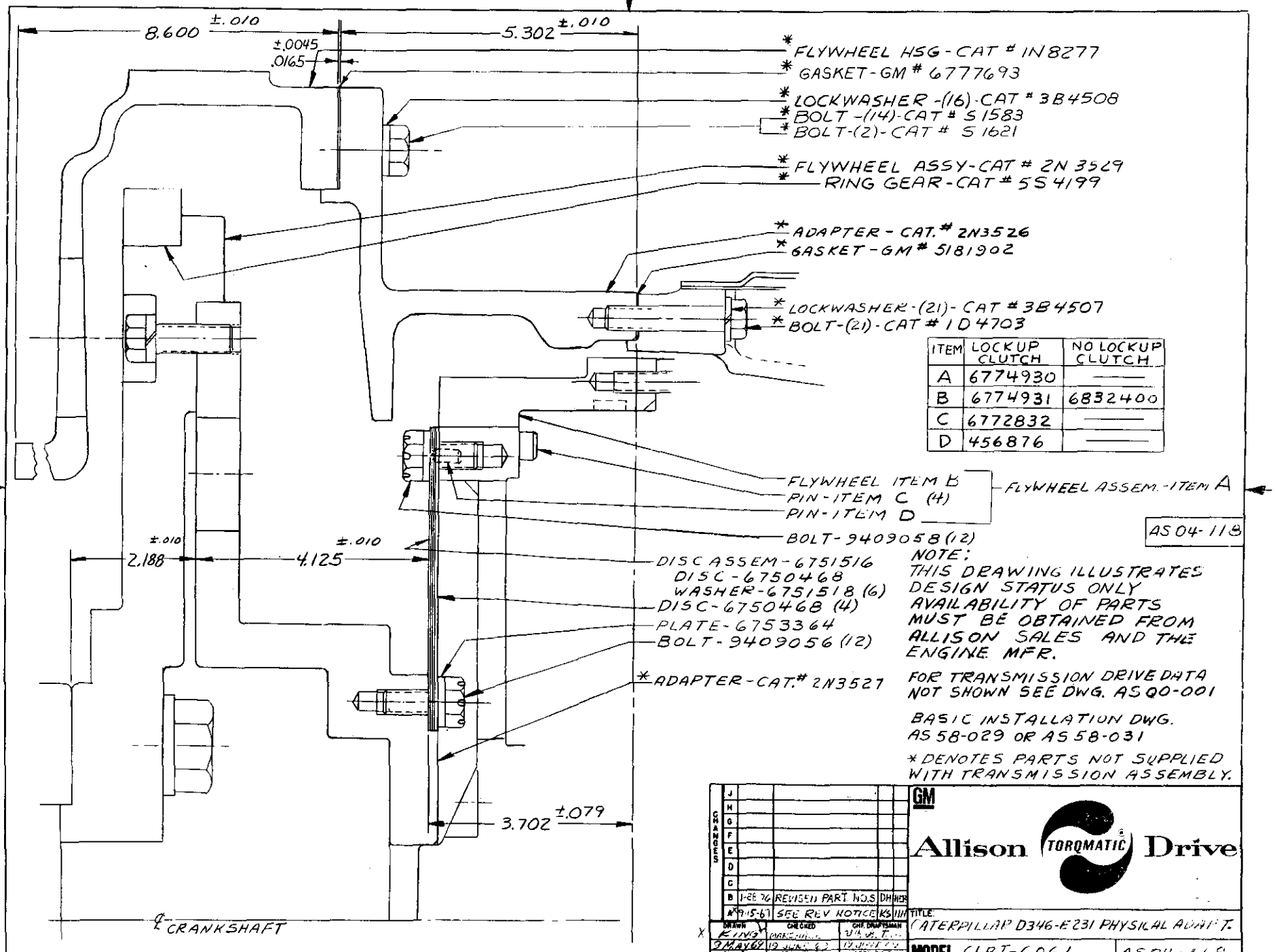

ITEM	LOCKUP CLUTCH	NO LOCKUP CLUTCH
A	6774930	——
B	6774931	6832400
C	6772832	——
D	456876	——

AS 04-118

NOTE:
THIS DRAWING ILLUSTRATES DESIGN STATUS ONLY AVAILABILITY OF PARTS MUST BE OBTAINED FROM ALLISON SALES AND THE ENGINE MFR.

FOR TRANSMISSION DRIVE DATA NOT SHOWN SEE DWG. AS 00-001

BASIC INSTALLATION DWG. AS 58-029 OR AS 58-031

* DENOTES PARTS NOT SUPPLIED WITH TRANSMISSION ASSEMBLY.

CHANGES				
J				
H				
G				
F				
E				
D				
C				
B	1-28-76	REVISED PART NOS.	DH	HER
A	9-15-67	SEE REV NOTICE	KS	HH

GM
Allison TORQMATIC Drive

TITLE: CATERPILLAR D346-E231 PHYSICAL ADAPT.

DRAWN	CHECKED	CHF DRAFTSMAN
KING		
9 MAY 67	19 JUNE 67	19 JUNE 67
SCALE	PROJ. ENGR.	APPL. ENGR.
NONE	14 JUNE 67	16 JUNE 67

MODEL CLBT-6061 AS04-118

ALLISON DIVISION · GENERAL MOTORS CORPORATION · INDIANAPOLIS, INDIANA

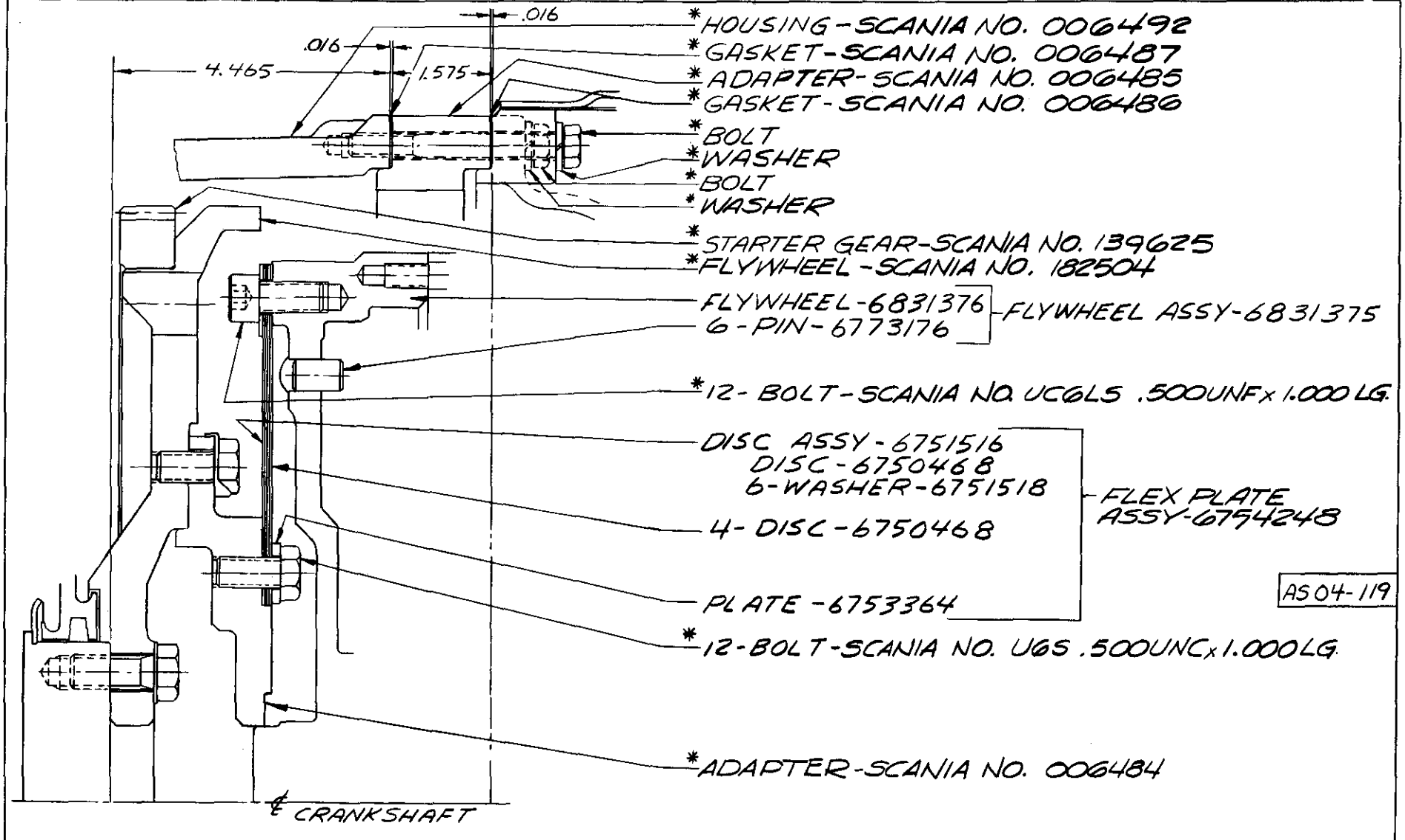

NOTE:
THIS DRAWING ILLUSTRATES DESIGN STATUS ONLY. AVAILABILITY OF PARTS MUST BE OBTAINED FROM ALLISON SALES AND THE ENGINE MFR

FOR TRANSMISSION DRIVE DATA NOT SHOWN SEE DRAWING AS 00-001

BASIC INSTALLATION DRAWING
HT 70 = AS 40-001
4460 = AS 44-001 OR AS 44-005

* DENOTES PARTS NOT SUPPLIED WITH TRANSMISSION ASSEMBLY

CHANGES	DRAWN	CHECKED	CHF ENGINEER
J	SHRAKE 5-3-69	HUBELE 11-13-69	VAB 11-13-69
H			
G	SCALE	PROJ. ENGR.	APPL. ENGR.
F	FULL	LEWIS 11-7-69	LAMMERT 11-7-69
E			
D			
C			
B			
A			

GM

Allison TORQMATIC® Drive

TITLE: SCANIA DS11 PHYSICAL ADAPTATION

MODEL 4460 OR HT 70 | AS 04-119

ALLISON DIVISION · GENERAL MOTORS CORPORATION · INDIANAPOLIS, INDIANA

REF SCANIA 007971

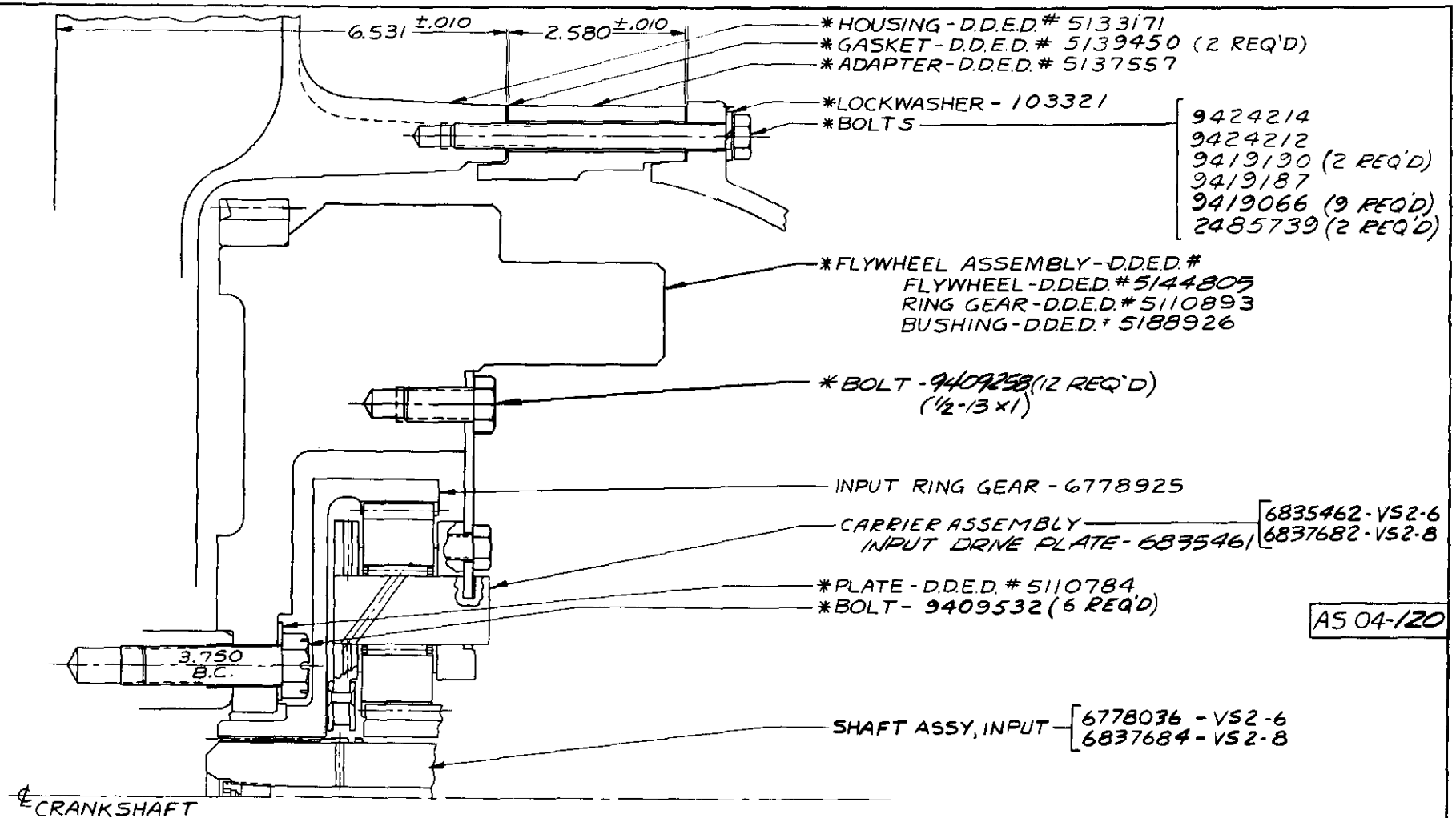

NOTE
THIS DRAWING ILLUSTRATES DESIGN STATUS ONLY. AVAILABILITY OF PARTS MUST BE OBTAINED FROM ALLISON SALES AND ENGINE MFR

*DENOTES PARTS NOT SUPPLIED WITH TRANSMISSION ASSEMBLY

J					
H					
G					
F					
E					
D					
C					
B					
X A	8-20-71	SEE REVISION NOTICE	K S M		
DRAWN Hoy	DESIGNED RING	CHK DESIGN VORB			
11/16/69	22 MAY 69	23 MAY 69			
SCALE FULL	PROJ ENGR E. W.	APPL ENGR ROBINSON			
	21 MAY 69	21 MAY 69			

GM GENERAL MOTORS

Allison TORQMATIC Drives

TITLE: DETROIT DIESEL "6V-71 PHYSICAL ADAPTATION

MODEL VS 2-6 AND VS2-8 (NO DAMPER) AS 04-120

ALLISON DIVISION - GENERAL MOTORS CORPORATION - INDIANAPOLIS, INDIANA

REF - AS04-085

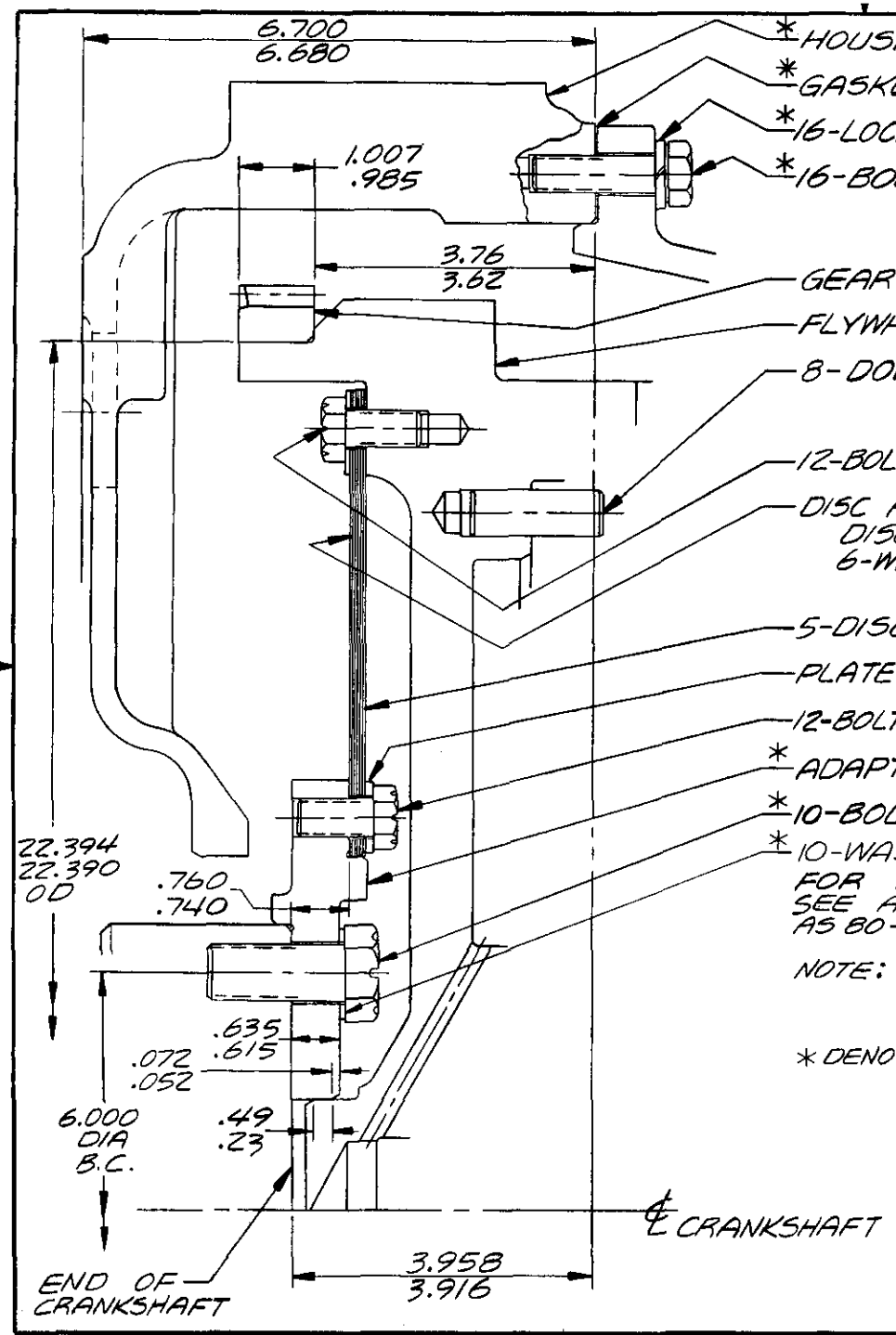

ITEM	DP 8860 DP 8861	DP 8960 DP 8961
A	6777712	6830667
B	6778849	6830666
C	6778693	6778693
D	124507	124507

*HOUSING-CUMMINS #3008059
*GASKET-6777693
*16-LOCKWASHER-103323 (REF)
*16-BOLT-179887 (REF)

CUMMINS #ITEM D

GEAR-ITEM C
FLYWHEEL-ITEM B
8-DOWEL-6776328
— FLYWHEEL ASSEMBLY-ITEM A

12-BOLT-9409058
DISC ASSEM-6778661
DISC-6778662
6-WASHER-6778663
— CUMMINS #179871
5-DISC-6778662
PLATE-6777689 (CUMMINS #179872)
12-BOLT-9409058 (CUMMINS # 118312)
*ADAPTER-CUMMINS #207548
— CUMMINS #196986

*10-BOLT-CUMMINS #3004725
*10-WASHER-CUMMINS #213053

FOR TRANSMISSION DRIVE DATA NOT SHOWN SEE AS00-021 AND BASIC INSTALLATION DRAWING AS 80-001

NOTE: THIS DRAWING ILLUSTRATES DESIGN STATUS ONLY. PARTS AVAILABILITY MUST BE OBTAINED FROM ALLISON SALES AND THE ENGINE MFG

*DENOTES PARTS NOT SUPPLIED WITH TRANSMISSION ASSEMBLY

AS04-123

CHANGES					
X	C	7/2/76	HOUSING 3008059 WAS 196286 AND BOLT NO. 3004725 WAS 3003495	DH	HEB
X	B	5-23-75	ADDED * TO 6777693	DH	JN
X	A	4-29-75	ADAPTER AND BOLT REV WASHER ADDED	DN	HC

DRAWN	CHECKED	CHF. DRAFTSMAN
TH. Bern	KING	VOB
21 Aug 69	28 Aug 69	29 AUG 69

SCALE	PROJ. ENGR.	APPL. ENGR.
X FULL	J.G.R.	E.P.W.
	25 AUG 69	26 AUG 69

GM

Allison TORQMATIC® Drive

TITLE: CUMMINS VTA 1710 (PHASE III) PHYSICAL ADAPTATION

MODEL DP 8000 | AS04-123

ALLISON DIVISION-GENERAL MOTORS CORPORATION-INDIANAPOLIS, INDIANA

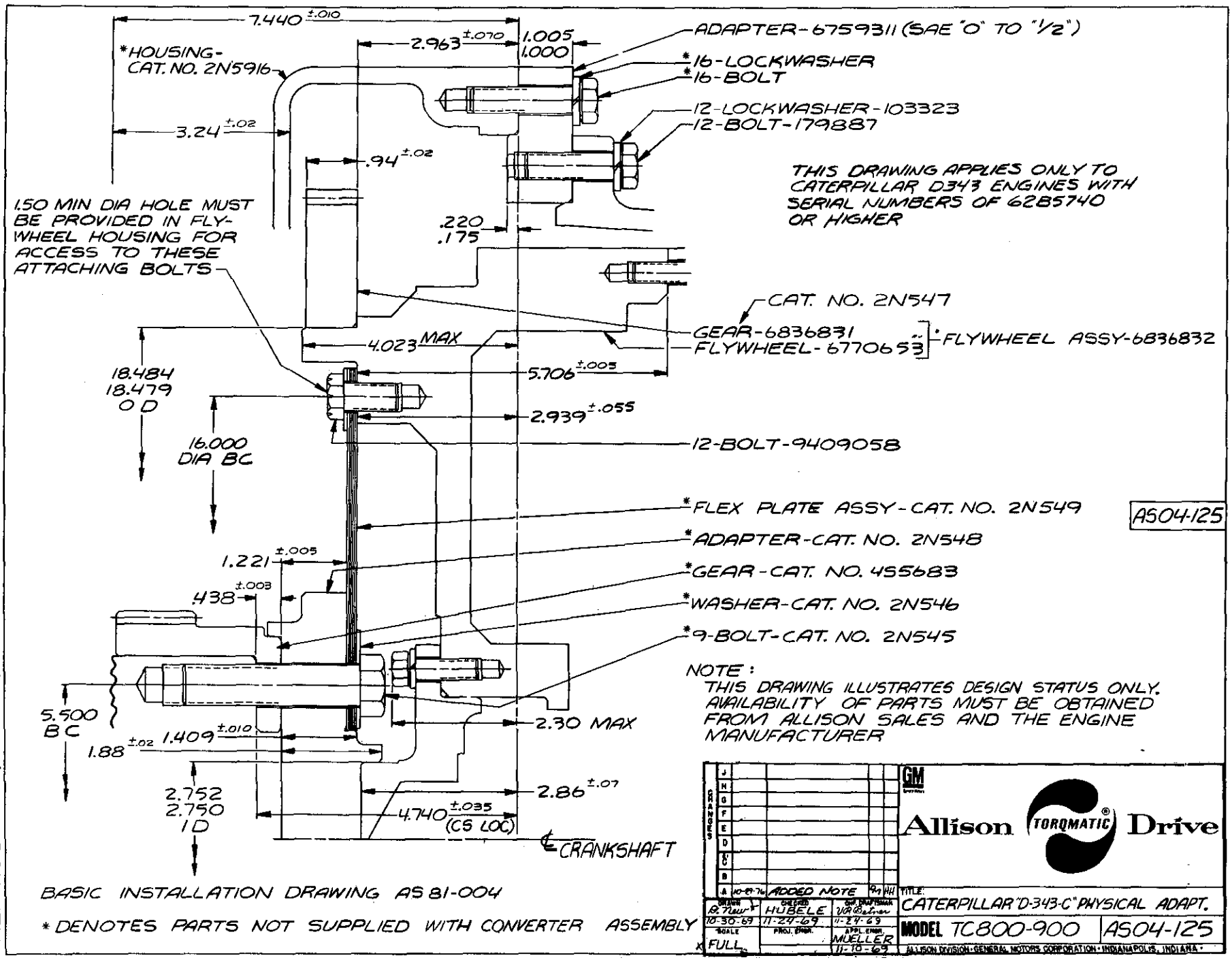

NOTE:
THIS DRAWING ILLUSTRATES DESIGN STATUS ONLY. AVAILABILITY OF PARTS MUST BE OBTAINED FROM ALLISON SALES AND THE ENGINE MANUFACTURER

BASIC INSTALLATION DRAWING AS 81-004

* DENOTES PARTS NOT SUPPLIED WITH CONVERTER ASSEMBLY

CHANGES				
J				
H				
G				
F				
E				
D				
C				
B				
A	10-29-76	ADDED NOTE		

GM

Allison TORQMATIC® Drive

DRAWN	CHECKED	CHF. DRAFTSMAN
R. New	HUBELE	V.R. Betner
10-30-69	11-24-69	11-24-69
SCALE	PROJ. ENGR.	APPL. ENGR.
FULL		MUELLER 11-10-69

TITLE: CATERPILLAR "D-343-C" PHYSICAL ADAPT.

MODEL TC800-900 | AS04-125

ALLISON DIVISION · GENERAL MOTORS CORPORATION · INDIANAPOLIS, INDIANA

REF-AS04-022, AS04-031

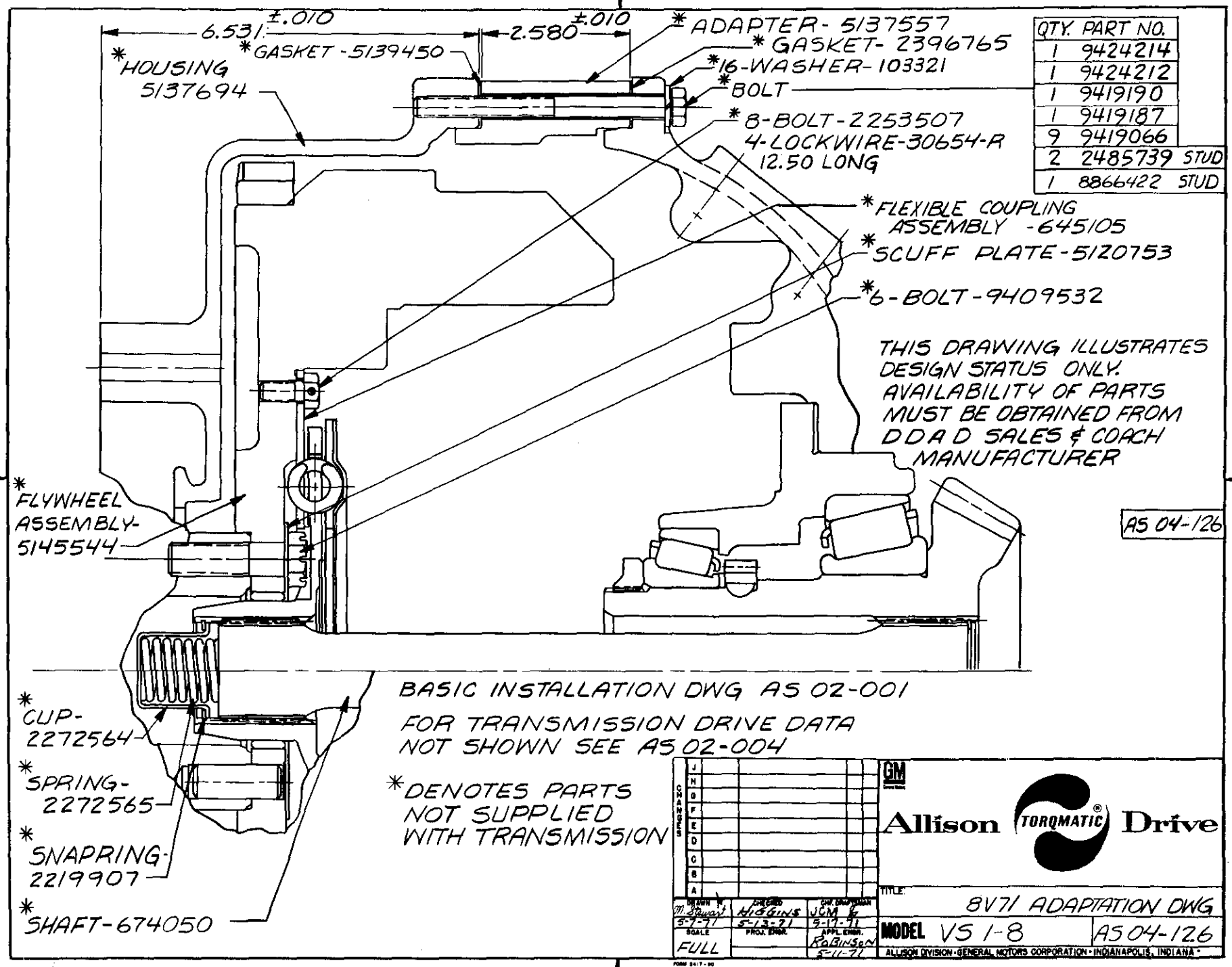

QTY.	PART NO.	
1	9424214	
1	9424212	
1	9419190	
1	9419187	
9	9419066	
2	2485739	STUD
1	8866422	STUD

THIS DRAWING ILLUSTRATES DESIGN STATUS ONLY. AVAILABILITY OF PARTS MUST BE OBTAINED FROM DDAD SALES & COACH MANUFACTURER

AS 04-126

BASIC INSTALLATION DWG AS 02-001

FOR TRANSMISSION DRIVE DATA NOT SHOWN SEE AS 02-004

*DENOTES PARTS NOT SUPPLIED WITH TRANSMISSION

CHANGES: J H G F E D C B A

DRAWN	CHECKED	CHF. DRAFTSMAN
M. Stewart 5-7-71	HIGGINS 5-13-71	JCM 5-17-71
SCALE: FULL	PROJ. ENGR.	APPL. ENGR. ROBINSON 5-11-71

GM

Allison TORQMATIC® Drive

TITLE: 8V71 ADAPTATION DWG

MODEL VS 1-8 AS 04-126

ALLISON DIVISION · GENERAL MOTORS CORPORATION · INDIANAPOLIS, INDIANA

FORM 2417-90

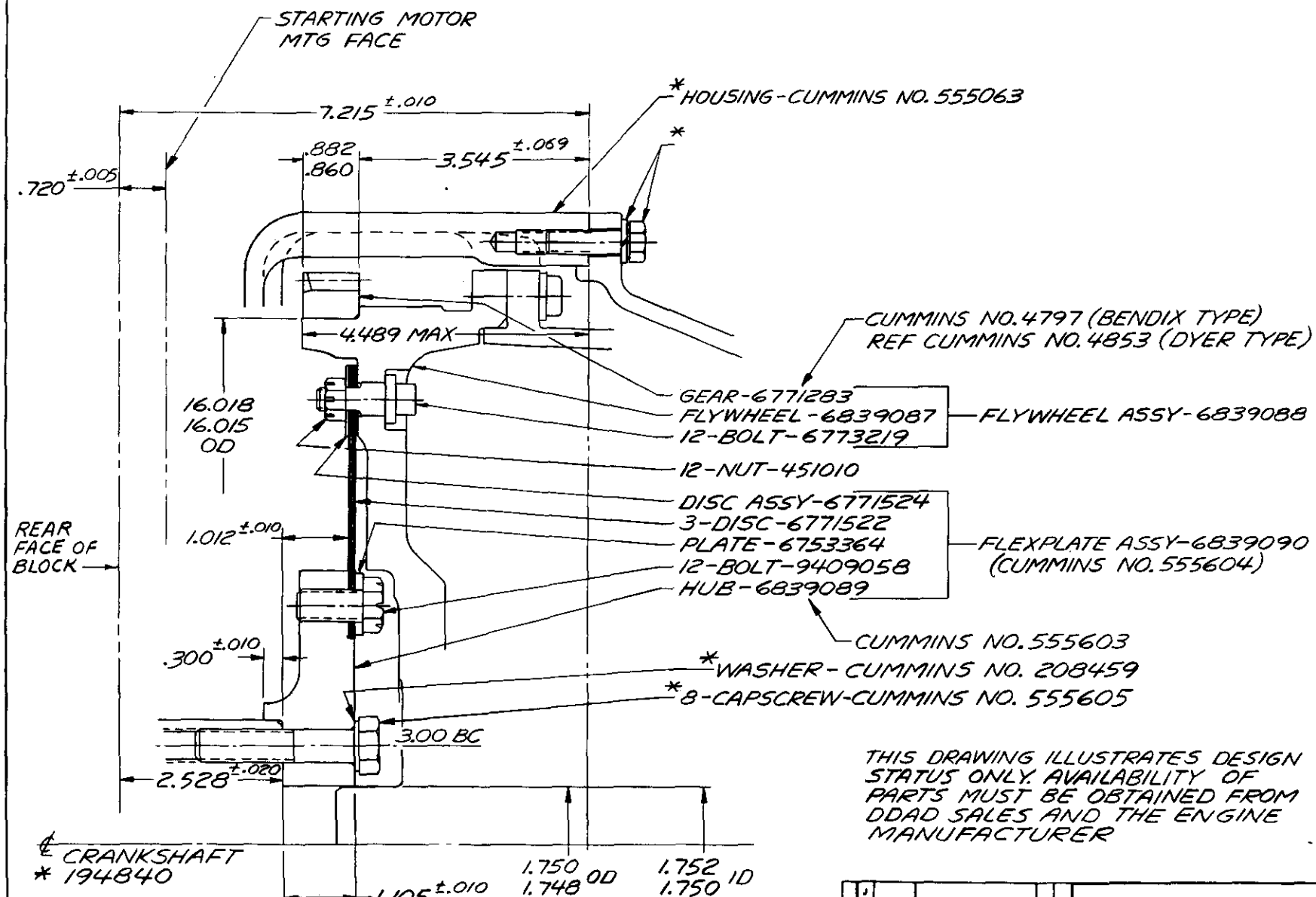

AS04-133

THIS DRAWING ILLUSTRATES DESIGN STATUS ONLY. AVAILABILITY OF PARTS MUST BE OBTAINED FROM DDAD SALES AND THE ENGINE MANUFACTURER

BASIC INSTALLATION DWG AS 34-004

FOR TRANSMISSION DRIVE DATA NOT SHOWN SEE DWG AS 00-001

* DENOTES PARTS NOT SUPPLIED WITH TRANSMISSION ASSY

CHANGES			
J			
H			
G			
F			
E			
D			
C			
B			
A			

DRAWN	CHECKED	CHF. DRAFTSMAN
CLARK 3-15-72	EHLMANN 5-3-72	Moyer 5-3-72
SCALE FULL	PROJ. ENGR.	APPL. ENGR. M.R. SHEPHERD 4-21-72

Allison Transmissions

TITLE: CUMMINS V-504 PHYSICAL ADAPT.

MODEL CT 3000 AS04-133

Detroit Diesel Allison Division of General Motors · Indianapolis, Indiana

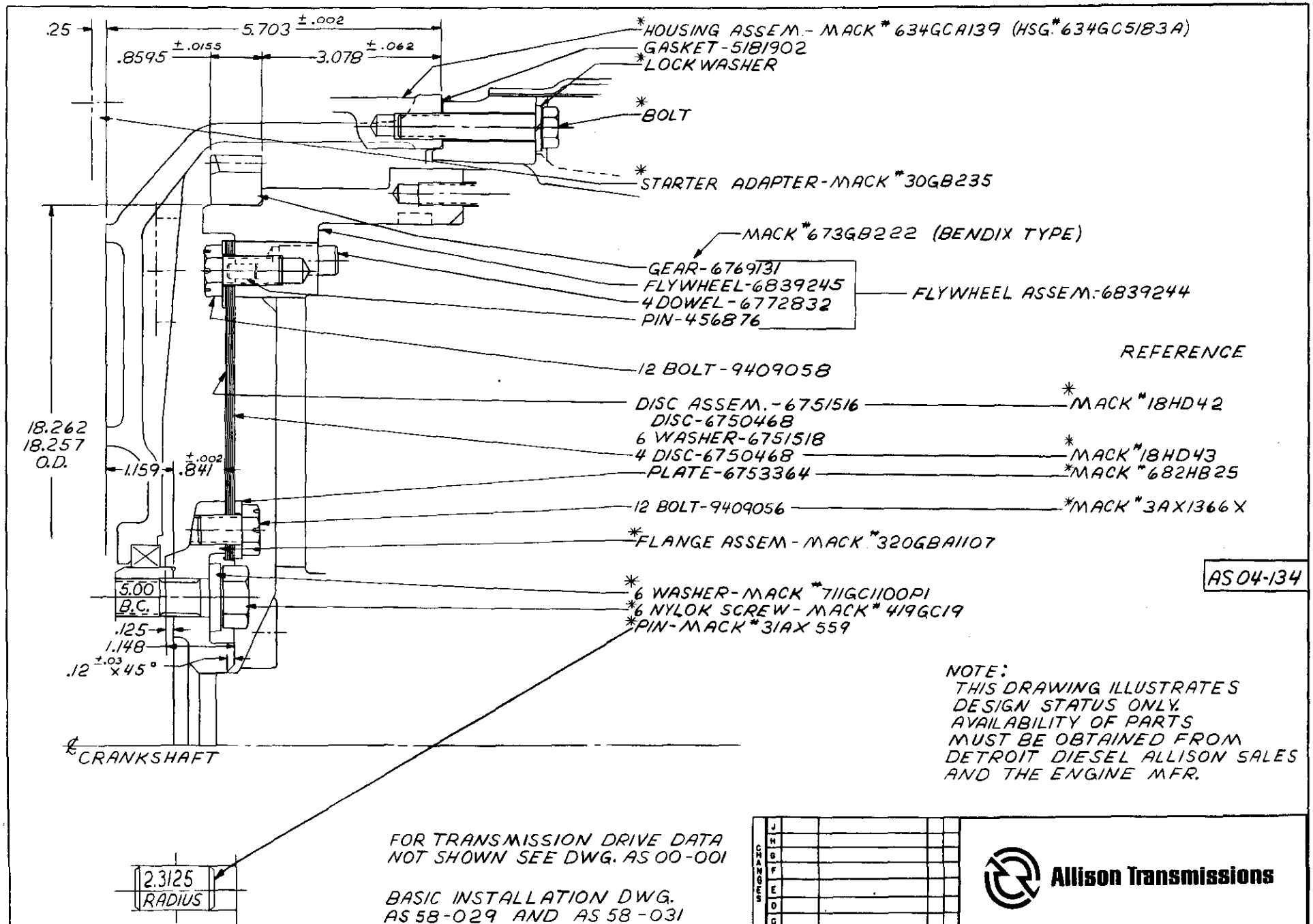

NOTE:
THIS DRAWING ILLUSTRATES DESIGN STATUS ONLY. AVAILABILITY OF PARTS MUST BE OBTAINED FROM DETROIT DIESEL ALLISON SALES AND THE ENGINE MFR.

FOR TRANSMISSION DRIVE DATA NOT SHOWN SEE DWG. AS 00-001

BASIC INSTALLATION DWG. AS 58-029 AND AS 58-031

* DENOTES PARTS NOT SUPPLIED WITH TRANSMISSION ASSEMBLY.

CHANGES			
J			
H			
G			
F			
E			
D			
C			
B			
A			

DRAWN BY	CHECKED	CHF. DRAFTSMAN
POWELL	EHLMANN	Mayer
5-11-72	5-22-72	5-22-72
SCALE	PROJ. ENGR.	APPL. ENGR.
FULL	J.A. MEMMER	Y.H. LEWIS

Allison Transmissions

TITLE: MACK "ENDT 866" PHYSICAL ADAPT.

MODEL 5 AND 6000 SERIES TRANSMISSION AS04-134

Detroit Diesel Allison Division of General Motors · Indianapolis, Indiana

MILLIMETRES TO INCHES			
mm MIN/NOM	mm MAX	in. MIN/NOM	in. MAX
	13.0		.53
14.28	14.78	.562	.582
17.76	18.00	.699	.709
23.37	24.38	.920	.960
24.39	24.89	.960	.980
79.17	82.37	3.117	3.243
100.02		3.938	
139.70		5.50	
179.13	179.62	7.052	7.072
465.08	465.20	18.310	18.315

ITEM	ENGINE SERIAL NUMBER							
	65B1 TO 65B486	QTY	65B487 TO 65B781	QTY	65B782 TO 65B2917	QTY	65B2918 TO 65B —	QTY
A	9L2779	1	9L2779	1	9L5140	1	—	—
B	5L8303	1	2N549	1	9L5552	1	9L5552	1
C	5L8290	1	9L5060	1	9L5060	1	9L5060	1
D	9L2758	9	4S9364	9	4S9364	9	4S9364	9
E	2M5916	3	2N546	1	2N546	1	2N546	1

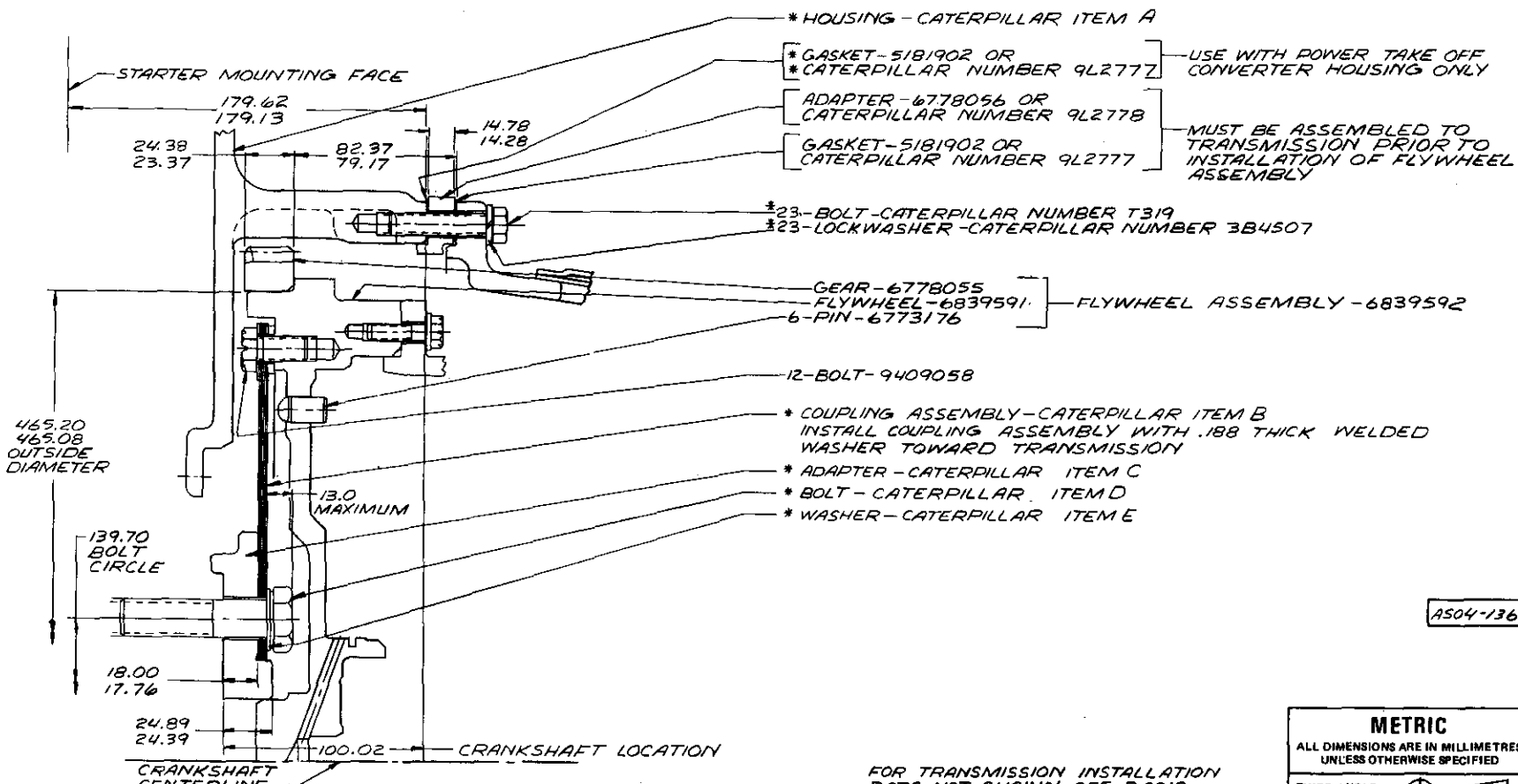

AS04-136

FOR TRANSMISSION INSTALLATION DATA NOT SHOWN SEE BASIC INSTALLATION DRAWING — AS45-030

METRIC
ALL DIMENSIONS ARE IN MILLIMETRES, UNLESS OTHERWISE SPECIFIED

THIRD ANGLE PROJECTION

THIS DRAWING ILLUSTRATES DESIGN STATUS ONLY. AVAILABILITY OF PARTS MUST BE OBTAINED FROM DETROIT DIESEL ALLISON SALES AND THE ENGINE MANUFACTURER

FOR TRANSMISSION DRIVE DATA NOT SHOWN SEE DRAWING — AS 00-001

* DENOTES PARTS NOT SUPPLIED WITH TRANSMISSION ASSEMBLY

CHANGES

A	11-11-75	REVISED AND REDRAWN	
DRAWN	CHECKED	CHF. DRAFTSMAN	
POWELL	S. GEBBY		
5-23-72	6-1-72	6-1-72	
SCALE	PROJ. ENGR.	APPL. ENGR.	
FULL		HFB 5-25-72	

Allison Transmissions

TITLE: CATERPILLAR "1693" PHYSICAL ADAPTATION

MODEL HT 700 D | AS04-136

Detroit Diesel Allison Division of General Motors · Indianapolis, Indiana

FORM 8207-S

MILLIMETRES TO INCHES			
mm MIN/NOM	mm MAX	INCHES MIN/NOM	INCHES MAX
8.39	8.89	.330	.350
25.15	25.65	.990	1.010
76.56	79.60	3.014	3.134
95.25		3.7500	
98.58	100.53	3.8809	3.9579
165.64	166.14	6.521	6.541
469.37	469.49	18.479	18.484

V-ENGINES				
ITEM	CAST IRON HOUSING	QTY	ALUMNUM HOUSING	QTY
A	5140661	1	5143941	1
B	103322	24	103322	12
C	179861	24	179862	12

IN-LINE ENGINES		
ITEM	CAST IRON HOUSING	QTY
A	5134423	1
B	103322	24
C	179861	24

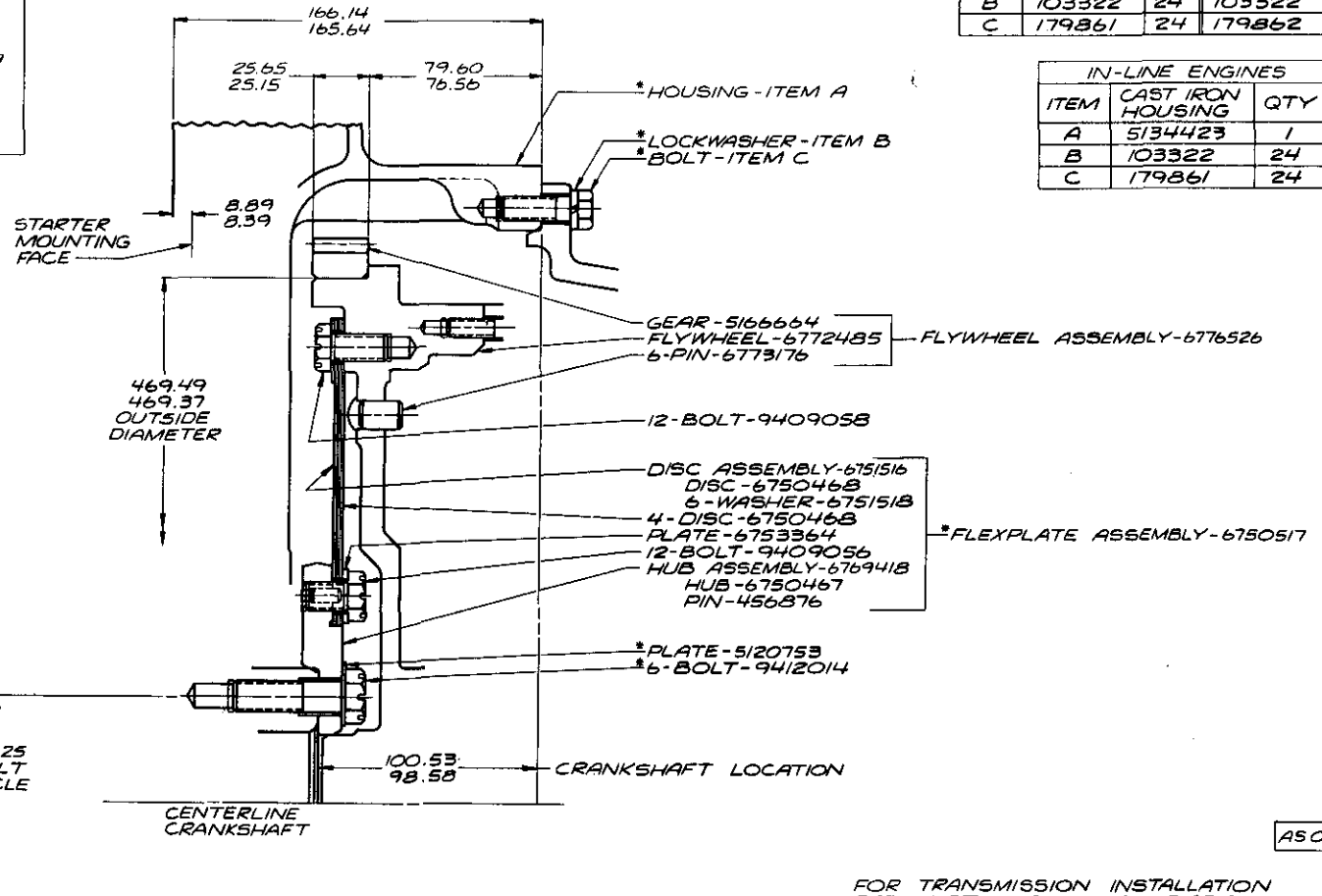

AS 04-137

FOR TRANSMISSION INSTALLATION DATA NOT SHOWN SEE BASIC INSTALLATION DRAWING —— AS 45-030

THIS DRAWING ILLUSTRATES DESIGN STATUS ONLY AVAILABILITY OF PARTS MUST BE OBTAINED FROM DETROIT DIESEL ALLISON SALES

FOR TRANSMISSION DRIVE DATA NOT SHOWN SEE DRAWING —— AS 00-001

* DENOTES PARTS NOT SUPPLIED WITH TRANSMISSION ASSEMBLY

METRIC
ALL DIMENSIONS ARE IN MILLIMETRES, UNLESS OTHERWISE SPECIFIED

THIRD ANGLE PROJECTION

Allison Transmissions

TITLE DETROIT DIESEL 71 SERIES PHYSICAL ADAPTATION

MODEL 700 SERIES | AS 04-137

Detroit Diesel Allison Division of General Motors · Indianapolis, Indiana

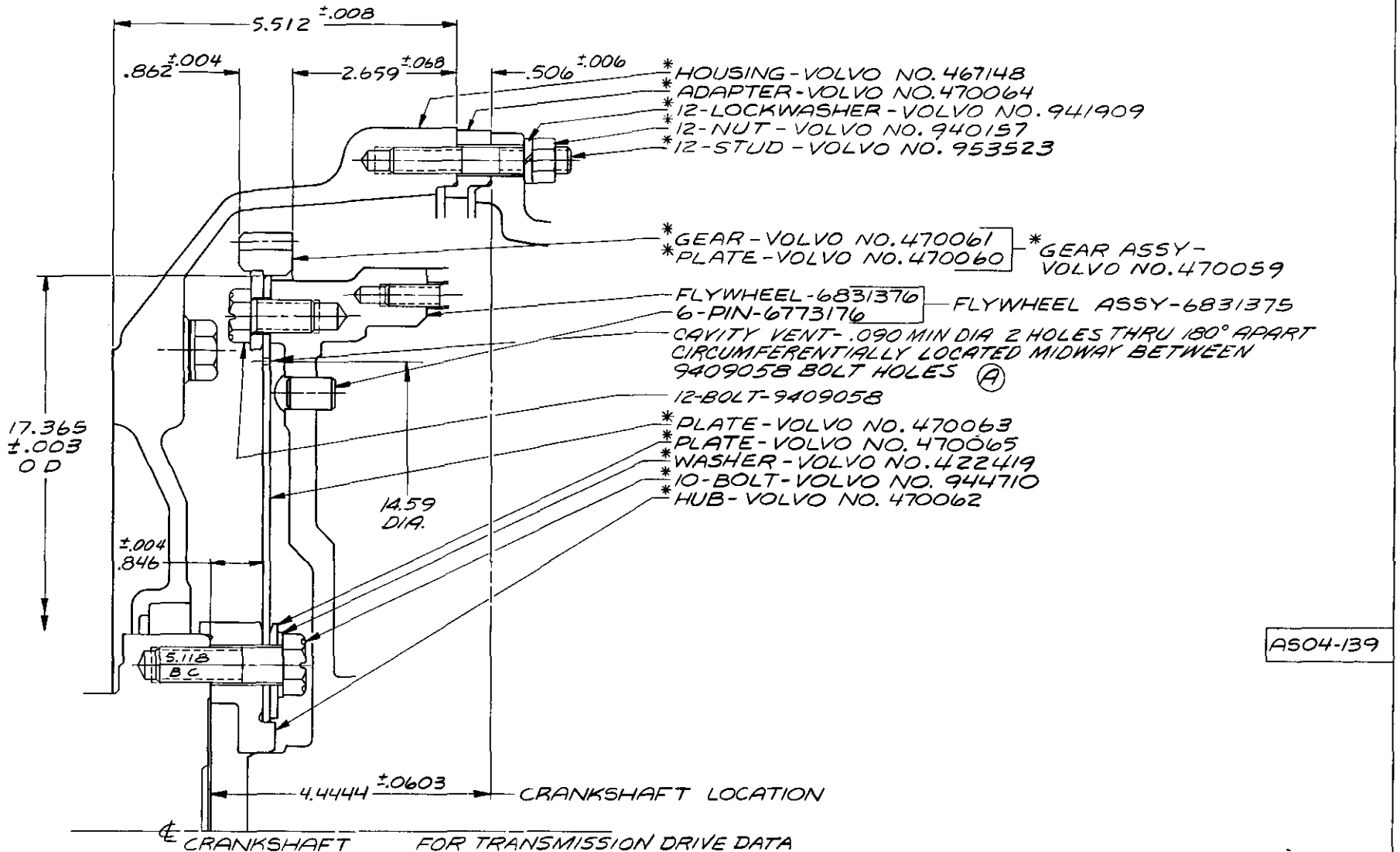

AS04-139

NOTE :
THIS DRAWING ILLUSTRATES DESIGN STATUS ONLY AVAILABILITY OF PARTS MUST BE OBTAINED FROM DETROIT DIESEL ALLISON SALES AND THE ENGINE MANUFACTURER

FOR TRANSMISSION DRIVE DATA NOT SHOWN SEE:
AS 41-018 FOR HT-700
AS 00-001 FOR HT-70, 4460
BASIC INSTALLATION DWG
HT 740D = AS 41-006
HT 750D = AS 41-019
4460 = AS 44-001 OR AS 44-005
HT-70 = AS 40-001

* DENOTES PARTS NOT SUPPLIED WITH TRANSMISSION ASSEMBLY

CHANGES			
J			
H			
G			
F			
E			
D			
C			
B			
A	42378	HOLES ADDED	6-11-73

DRAWN	CHECKED	CHF. DRAFTSMAN
D. NEW	H. BENNETT	Moyer
2-23-73	6-7-73	6-11-73
SCALE	PROJ. ENGR.	APPL. ENGR.
FULL		H.F. BANISTER 4-10-73

Allison Transmissions

TITLE: VOLVO TD, THD-100 AND TD, THD 120 PHYSICAL ADAPT.

MODEL HT700D, HT-70, CLT4460 AS04-139

Detroit Diesel Allison Division of General Motors · Indianapolis, Indiana

MILLIMETRES TO INCHES			
mm MIN/NOM	mm MAX	in. MIN/NOM	in. MAX
0.31	0.53	.012	.021
21.80		.858	
22.00		.866	
75.85	79.14	2.986	3.116
113.85		4.482	
446.01	446.06	17.5591	17.5615
446.37	446.68	17.5735	17.5861

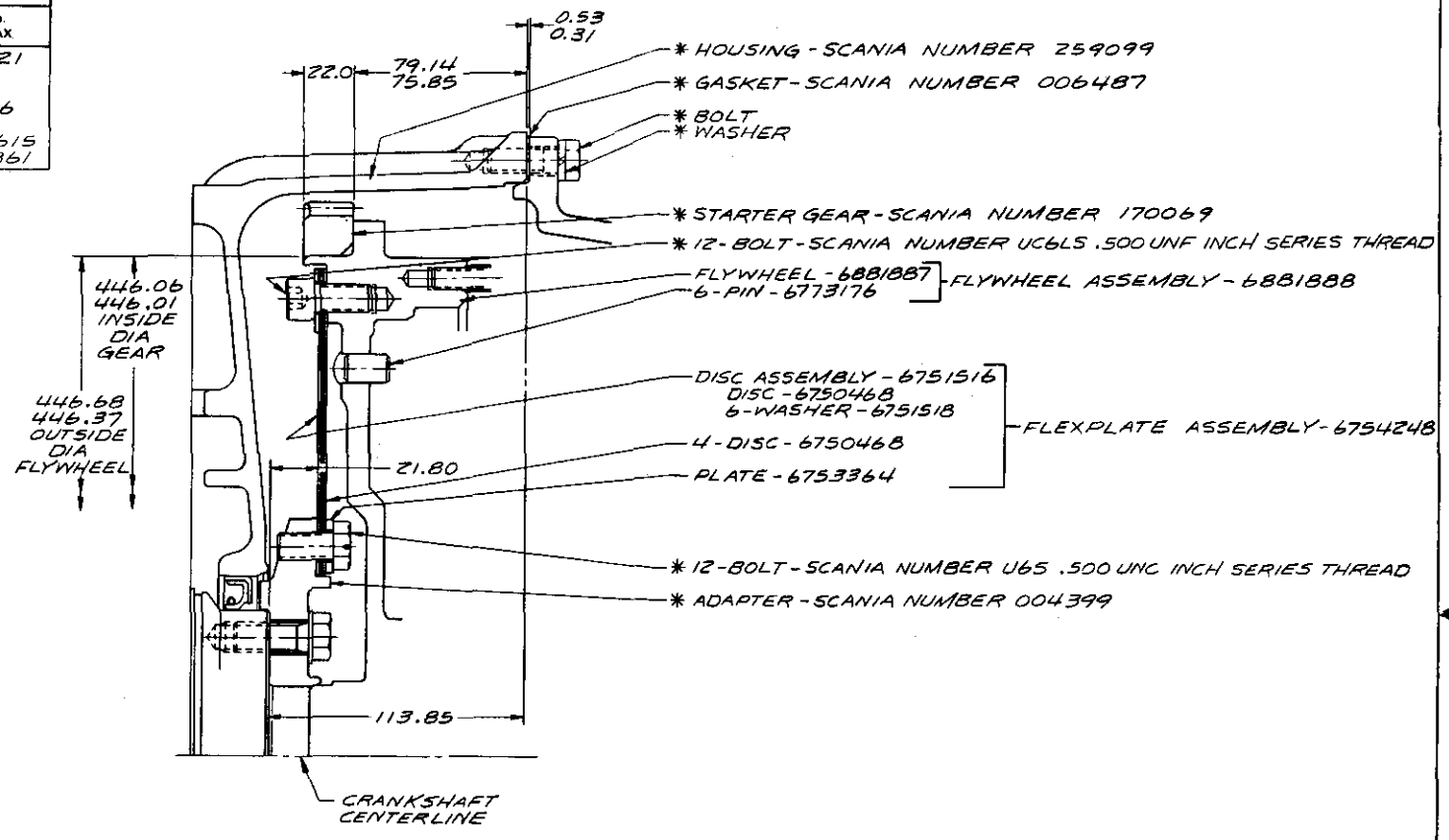

AS 04-148

FOR TRANSMISSION INSTALLATION DATA NOT SHOWN SEE BASIC INSTALLATION DRAWING - AS 45-030

THIS DRAWING ILLUSTRATES DESIGN STATUS ONLY. AVAILABILITY OF PARTS MUST BE OBTAINED FROM DETROIT DIESEL ALLISON SALES AND THE ENGINE MANUFACTURER

FOR TRANSMISSION DRIVE DATA NOT SHOWN SEE DRAWING - AS 00-001

* DENOTES PARTS NOT SUPPLIED WITH TRANSMISSION ASSEMBLY

METRIC

ALL DIMENSIONS ARE IN MILLIMETRES, UNLESS OTHERWISE SPECIFIED

THIRD ANGLE PROJECTION

CHANGES

DRAWN	CHECKED	CHF. DRAFTSMAN
D. HUGHES 11-18-74	HUBELE 2-7-75	2-7-75
SCALE FULL	PROJ. ENGR	APPL. ENGR ASHMAN 12-17-74

Allison Transmissions

TITLE: SCANIA - VABIS DS14 PHYSICAL ADAPTATION

MODEL 700 SERIES | AS 04-148

Detroit Diesel Allison Division of General Motors - Indianapolis, Indiana

REF SCANIA 004004

FORM 8202-S

MILLIMETRES TO INCHES			
mm MIN/NOM	mm MAX	in. MIN/NOM	in. MAX
28.32	28.83	1.115	1.155
81.64	85.09	3.214	3.350
99.42	100.56	3.914	3.959
127.00		5.000	
160.91	161.42	6.335	6.355
400.05		15.750	

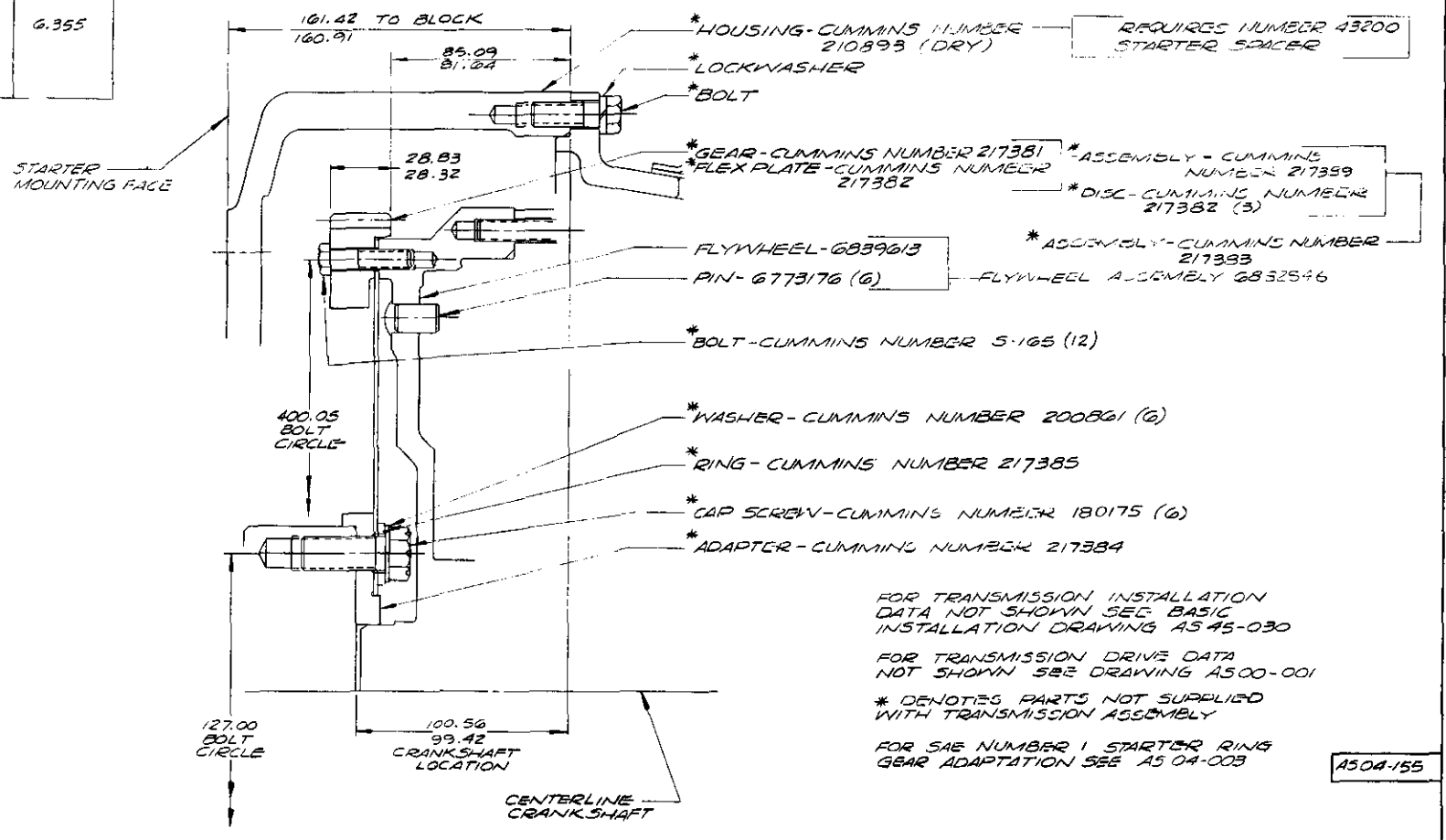

FOR TRANSMISSION INSTALLATION DATA NOT SHOWN SEE BASIC INSTALLATION DRAWING AS 45-030

FOR TRANSMISSION DRIVE DATA NOT SHOWN SEE DRAWING AS00-001

* DENOTES PARTS NOT SUPPLIED WITH TRANSMISSION ASSEMBLY

FOR SAE NUMBER 1 STARTER RING GEAR ADAPTATION SEE AS 04-003

A504-155

THIS DRAWING ILLUSTRATES DESIGN STATUS ONLY. AVAILABILITY OF PARTS MUST BE OBTAINED FROM DETROIT DIESEL ALLISON SALES AND THE ENGINE MANUFACTURER

METRIC

ALL DIMENSIONS ARE IN MILLIMETRES, UNLESS OTHERWISE SPECIFIED

THIRD ANGLE PROJECTION

CHANGES				
B	7-21-76	CAP SCREW 180175 WAS 204165		
A	6-6-76	FLYWHEEL ASSY WAS [illegible]		

DRAWN	CHECKED	ENG DEPARTMENT
AL MOORE 6-8-75	S. GEBBY 6-19-75	MOYER 6-20-75
SCALE FULL	PROJ ENGR S.L. ASHMAN 6-19-75	APPL ENGR S.L. ASHMAN 6-19-75

Allison Transmissions

TITLE CUMMINS "IN LINE" PHYSICAL ADAPTATION (WITH SAE 2 STARTER RING GEAR)

MODEL 700 SERIES A504-155

Detroit Diesel Allison Division of General Motors · Indianapolis, Indiana

FORM 8202 S

MILLIMETRES TO INCHES			
mm MIN/NOM	mm MAX	INCHES MIN/NOM	INCHES MAX
24.41	24.61	.961	.969
59.90	60.09	2.358	2.366
184.00		7.2400	

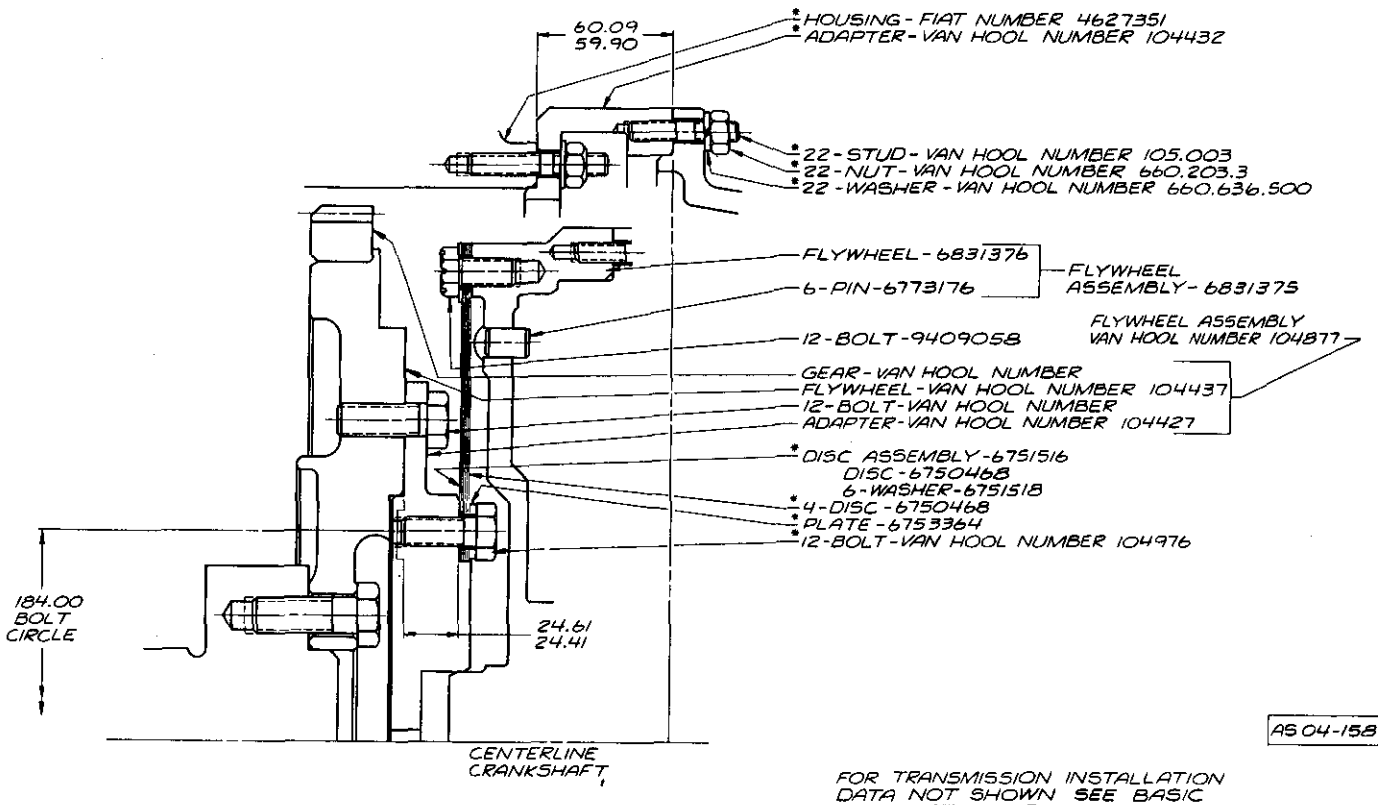

AS 04-158

FOR TRANSMISSION INSTALLATION DATA NOT SHOWN SEE BASIC INSTALLATION DRAWING - AS 45-030

THIS DRAWING ILLUSTRATES DESIGN STATUS ONLY AVAILABILITY OF PARTS MUST BE OBTAINED FROM DETROIT DIESEL ALLISON SALES AND THE ENGINE MANUFACTURER

FOR TRANSMISSION DRIVE DATA NOT SHOWN SEE DRAWING - AS 00-001

* DENOTES PARTS NOT SUPPLIED WITH TRANSMISSION ASSEMBLY

METRIC
ALL DIMENSIONS ARE IN MILLIMETRES, UNLESS OTHERWISE SPECIFIED

THIRD ANGLE PROJECTION

CHANGES			
J			
H			
G			
F			
E			
D			
C			
B			
A	4-1-75	REVISED FLYWHEEL	D H SG

Allison Transmissions

TITLE FIAT 8210, 02 PHYSICAL ADAPTATION

DRAWN	CHECKED	CHF. DRAFTSMAN
D. NEW	E. HLMANN	[illegible]
1-31-74	4-22-74	[illegible]
SCALE	PROJ. ENGR.	APPL. ENGR.
FULL		M.R. SACHNERS 2-11-74

MODEL 700 SERIES AS 04-158

Detroit Diesel Allison Division of General Motors - Indianapolis, Indiana

MILLIMETRES TO INCHES			
mm MIN/NOM	mm MAX	INCHES MIN/NOM	INCHES MAX
8.39	8.89	.330	.350
25.15	25.65	.990	1.010
76.56	79.60	3.014	3.134
98.58	100.53	3.8809	3.9579
106.68		4.2000	
165.64	166.14	6.521	6.541
469.37	469.49	18.479	18.484

ITEM	CAST IRON HOUSING	QTY	ALUMINUM HOUSING	QTY
A	5100476	1	5100477	1
B	103322	24	103322	24
C	179861	24	179862	24

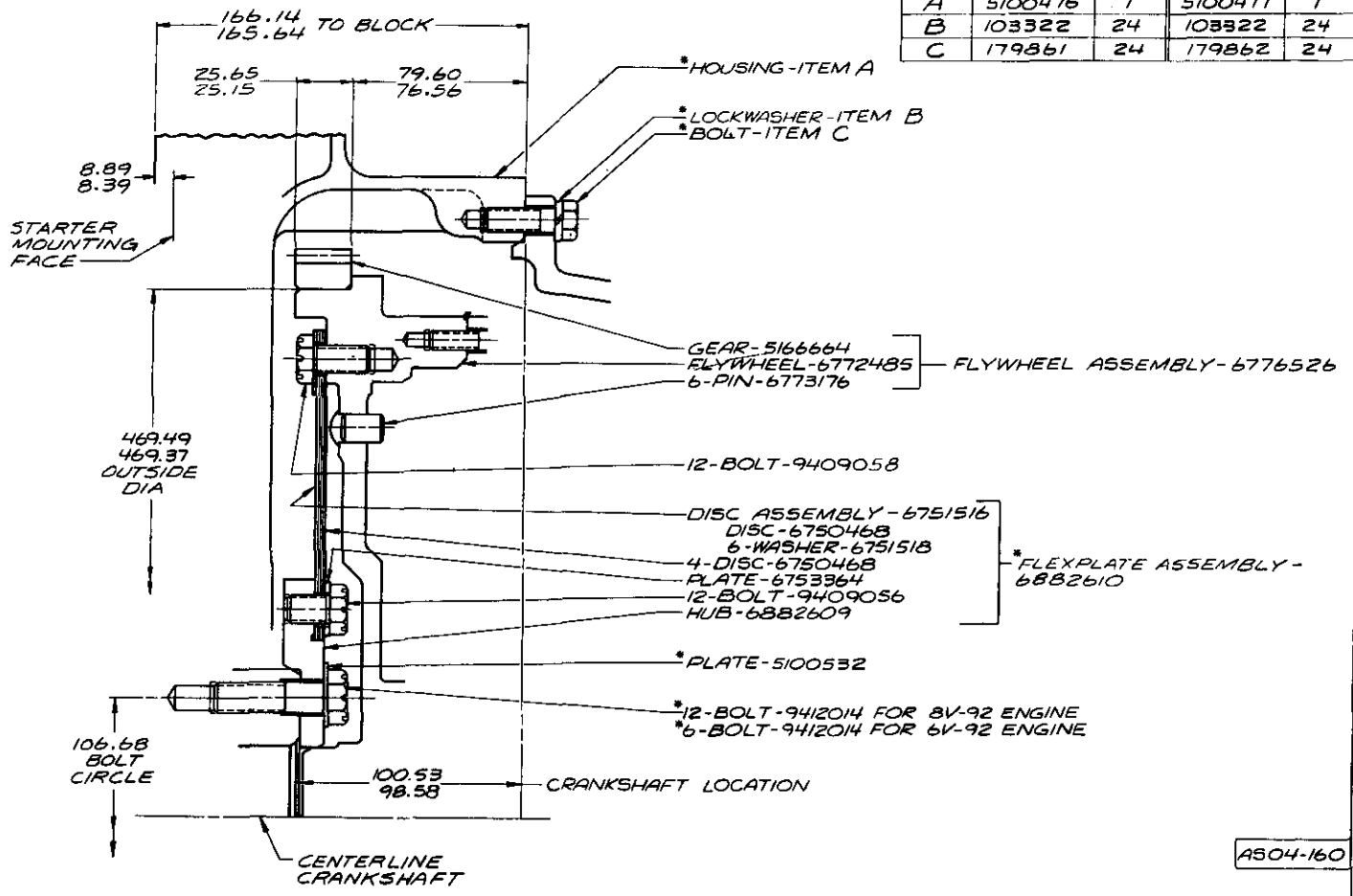

AS04-160

FOR TRANSMISSION INSTALLATION DATA NOT SHOWN SEE BASIC INSTALLATION DRAWING AS 45-030

THIS DRAWING ILLUSTRATES DESIGN STATUS ONLY AVAILABILITY OF PARTS MUST BE OBTAINED FROM DETROIT DIESEL ALLISON SALES

FOR TRANSMISSION DRIVE DATA NOT SHOWN SEE DRAWING AS 00-001

* DENOTES PARTS NOT SUPPLIED WITH TRANSMISSION ASSEMBLY

METRIC
ALL DIMENSIONS ARE IN MILLIMETRES, UNLESS OTHERWISE SPECIFIED
THIRD ANGLE PROJECTION

Allison Transmissions

TITLE: DETROIT DIESEL 92 SERIES PHYSICAL ADAPTATION

MODEL 700 SERIES | AS04-160

Detroit Diesel Allison Division of General Motors · Indianapolis, Indiana

MILLIMETRES TO INCHES			
mm MIN/NOM	mm MAX	in. MIN/NOM	in. MAX
18.80	19.30	.740	.760
25.02	25.57	.985	1.007
75.94	79.50	2.990	3:130
93.48	93.98	3.680	3.700
99.47	100.53	3.916	3.958
152.40		6.0000	
247.53	248.03	9.745	9.765
568.71	568.80	22.390	22.394

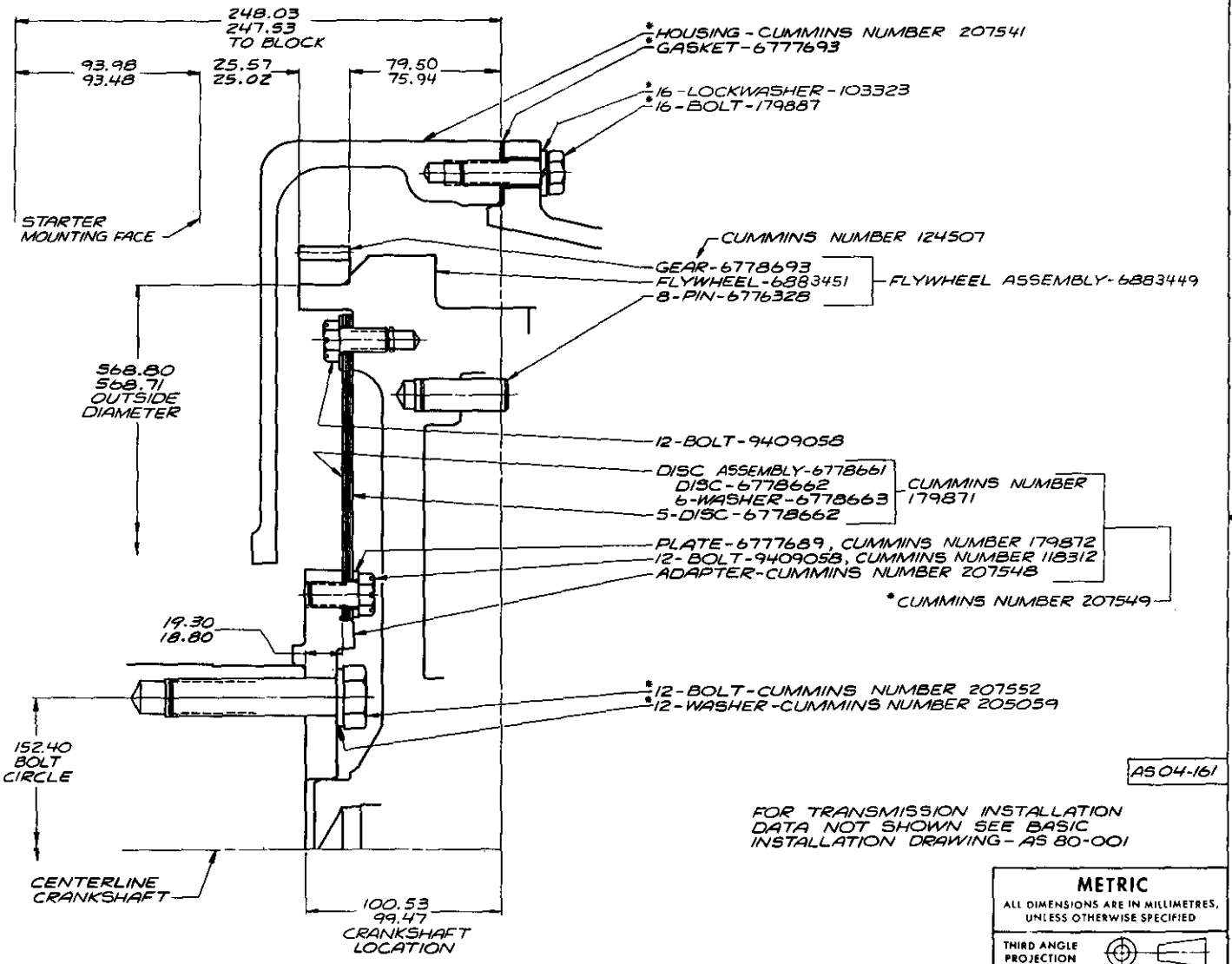

AS 04-161

FOR TRANSMISSION INSTALLATION DATA NOT SHOWN SEE BASIC INSTALLATION DRAWING - AS 80-001

THIS DRAWING ILLUSTRATES DESIGN STATUS ONLY AVAILABILITY OF PARTS MUST BE OBTAINED FROM DETROIT DIESEL ALLISON SALES AND THE ENGINE MANUFACTURER

FOR TRANSMISSION DRIVE DATA NOT SHOWN SEE DRAWING - AS 00-021

* DENOTES PARTS NOT SUPPLIED WITH TRANSMISSION ASSEMBLY

METRIC
ALL DIMENSIONS ARE IN MILLIMETRES, UNLESS OTHERWISE SPECIFIED

THIRD ANGLE PROJECTION

A	3/4/76	6883449 WAS 6830667 6883451 WAS 6830666 207541 WAS 207589 75.94-79.50 WAS 76.08-79.62	H E B

Allison Transmissions

TITLE: CUMMINS KT 2300 PHYSICAL ADAPTATION

MODEL DP 8961 | AS 04-161

Detroit Diesel Allison Division of General Motors · Indianapolis, Indiana

D. NEW 5-20-74 | CHLMANN 9-27-74 | J.C. MOYER 9-27-74 | J.R. MEMMER 7-17-74

SCALE FULL

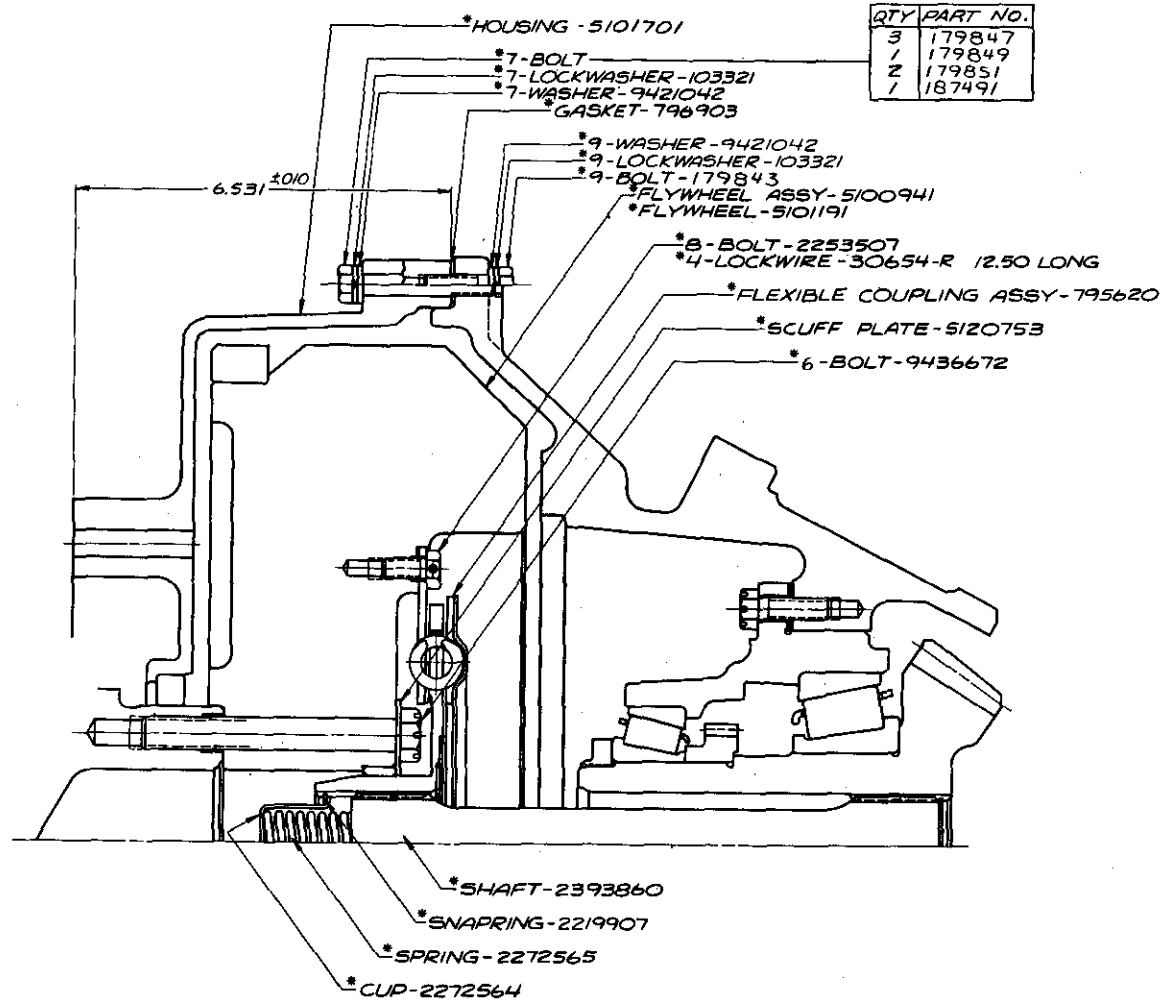

QTY	PART NO.
3	179847
1	179849
2	179851
1	187491

AS04-162

FOR TRANSMISSION INSTALLATION DATA NOT SHOWN SEE BASIC INSTALLATION DRAWING NO. AS 02-033

THIS DRAWING ILLUSTRATES DESIGN STATUS ONLY AVAILABILITY OF PARTS MUST BE OBTAINED FROM DETROIT DIESEL ALLISON SALES

FOR TRANSMISSION DRIVE DATA NOT SHOWN SEE DRAWING NO. AS 02-021

* DENOTES PARTS NOT SUPPLIED WITH THE TRANSMISSION ASSEMBLY

D	3-3-77	REVISED BOLT PART NOS		
C	8-2-76	8V71 WAS V71		
B	4/14/75	ADDED BOLT CHART (QTY 7)		
A	1-16-75	ADDED LOCKWASHER AND NOS. TO BOLT, WASHER, LOCKWASHER, GASKET WAS 2396765, FLEX COUP ASSY WAS 6430[illegible]		

POWELL 2-24-74 — ENLMANN 7-5-74 — 7-9-74 — D.L. ROBINSON 6-26-74

SCALE FULL

Allison Transmissions

TITLE DETROIT DIESEL 8V71 PHYSICAL ADAPTATION

MODEL V730 D — AS04-162

Detroit Diesel Allison Division of General Motors · Indianapolis, Indiana

MILLIMETRES TO INCHES			
mm MIN/NOM	mm MAX	in. MIN/NOM	in. MAX
20.32	20.82	.800	.820
25.01	25.57	.985	1.007
82.96	86.13	3.266	3.391
111.12		4.3750	
119.66	121.56	4.711	4.786
148.97	149.47	5.865	5.885
467.08	467.20	18.389	18.394

ITEM	DYER TYPE STARTER GEAR	BENDIX TYPE STARTER GEAR
A	6771565	6773781
B	6751948	6752502
C	124516	124509

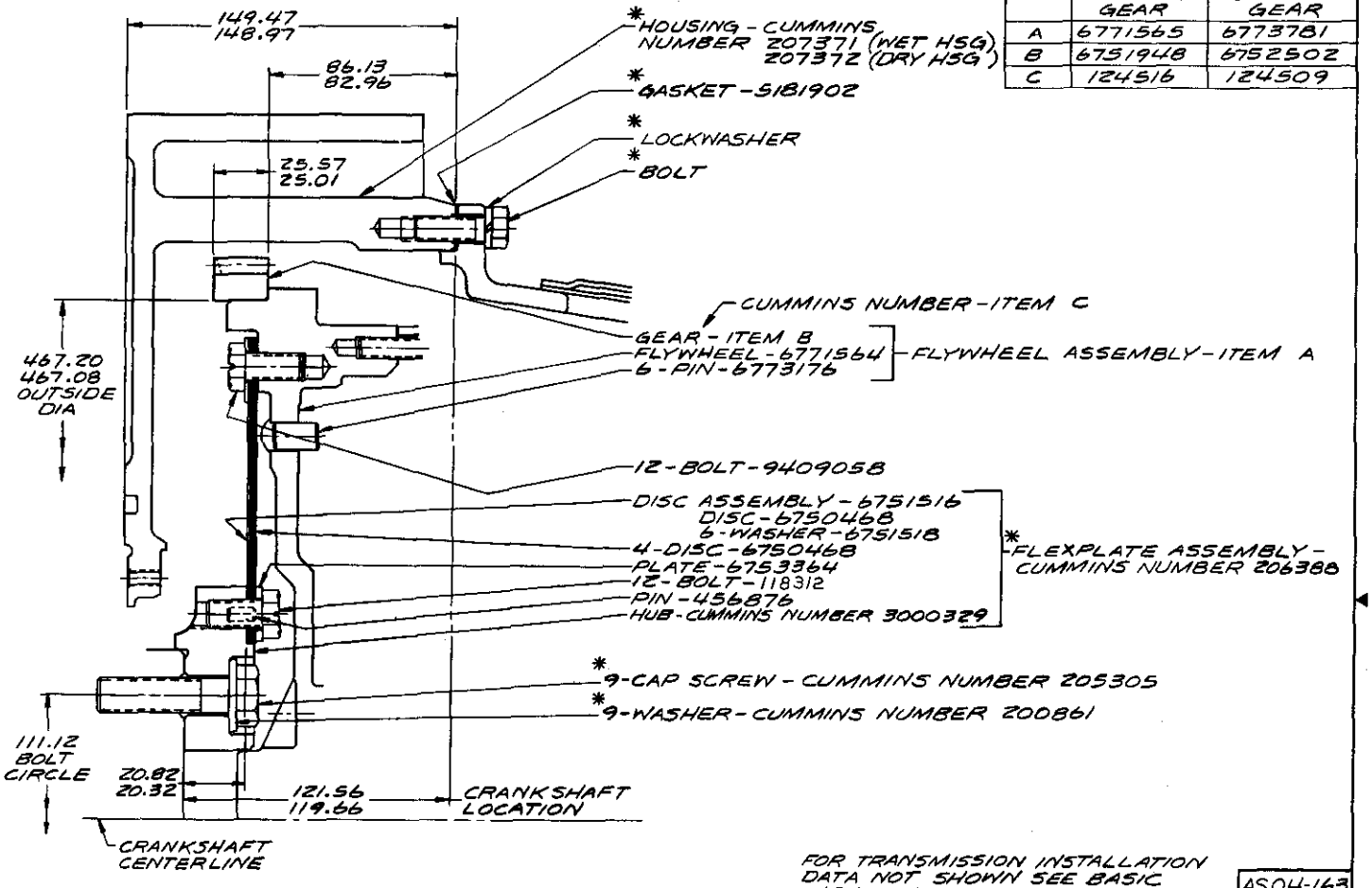

FOR TRANSMISSION INSTALLATION DATA NOT SHOWN SEE BASIC INSTALLATION DRAWING AS 41-006 AND AS 41-019

AS04-163

THIS DRAWING ILLUSTRATES DESIGN STATUS ONLY. AVAILABILITY OF PARTS MUST BE OBTAINED FROM DETROIT DIESEL ALLISON SALES AND THE ENGINE MANUFACTURER

FOR TRANSMISSION DRIVE DATA NOT SHOWN SEE DRAWING-AS 41-018

*DENOTES PARTS NOT SUPPLIED WITH TRANSMISSION ASSEMBLY

METRIC
ALL DIMENSIONS ARE IN MILLIMETRES, UNLESS OTHERWISE SPECIFIED

THIRD ANGLE PROJECTION

CHANGES

A 7-14-76 118312 WAS 9409058 R1

Allison Transmissions

DRAWN	CHECKED	CHF DRAFTSMAN
HUGHES 11-7-74	HUBELE 2-4-75	2-4-75
SCALE FULL	PROJ. ENGR.	APPL. ENGR. ASHMAN 12-17-74

TITLE: CUMMINS KT-1150 SERIES PHYSICAL ADAPTATION

MODEL 700 SERIES AS04-163

Detroit Diesel Allison Division of General Motors - Indianapolis, Indiana

MILLIMETRES TO INCHES			
mm MIN/NOM	mm MAX	in. MIN/NOM	in. MAX
20.32	20.82	.800	.820
25.01	25.57	.985	1.007
82.96	86.13	3.266	3.391
111.12		4.3750	
119.66	121.56	4.711	4.786
148.97	149.47	5.865	5.885
467.08	467.20	18.389	18.394

ITEM	NO STARTER GEAR			BENDIX TYPE STARTER GEAR		DYER TYPE STARTER GEAR	
	24-045		24-050	24-016	24-095	72-152	
	NO LOCK-UP CLUTCH	LOCK-UP CLUTCH	LOCK-UP CLUTCH	NO LOCK-UP CLUTCH	LOCK-UP CLUTCH	NO LOCK-UP CLUTCH	LOCK-UP CLUTCH
A	NONE	6770911	6770913	6768926	6770908	6768928	6770910
B	6768918	6770891	6770891	6768918	6770891	6768918	6770891
C	NONE	NONE	NONE	6752502	6752502	6751948	6751948
D	NONE	NONE	NONE	124509	124509	124516	124516
E	NONE	6772832	6772832	NONE	6772832	NONE	6772832
F	NONE	456876	NONE	NONE	456876	NONE	456876

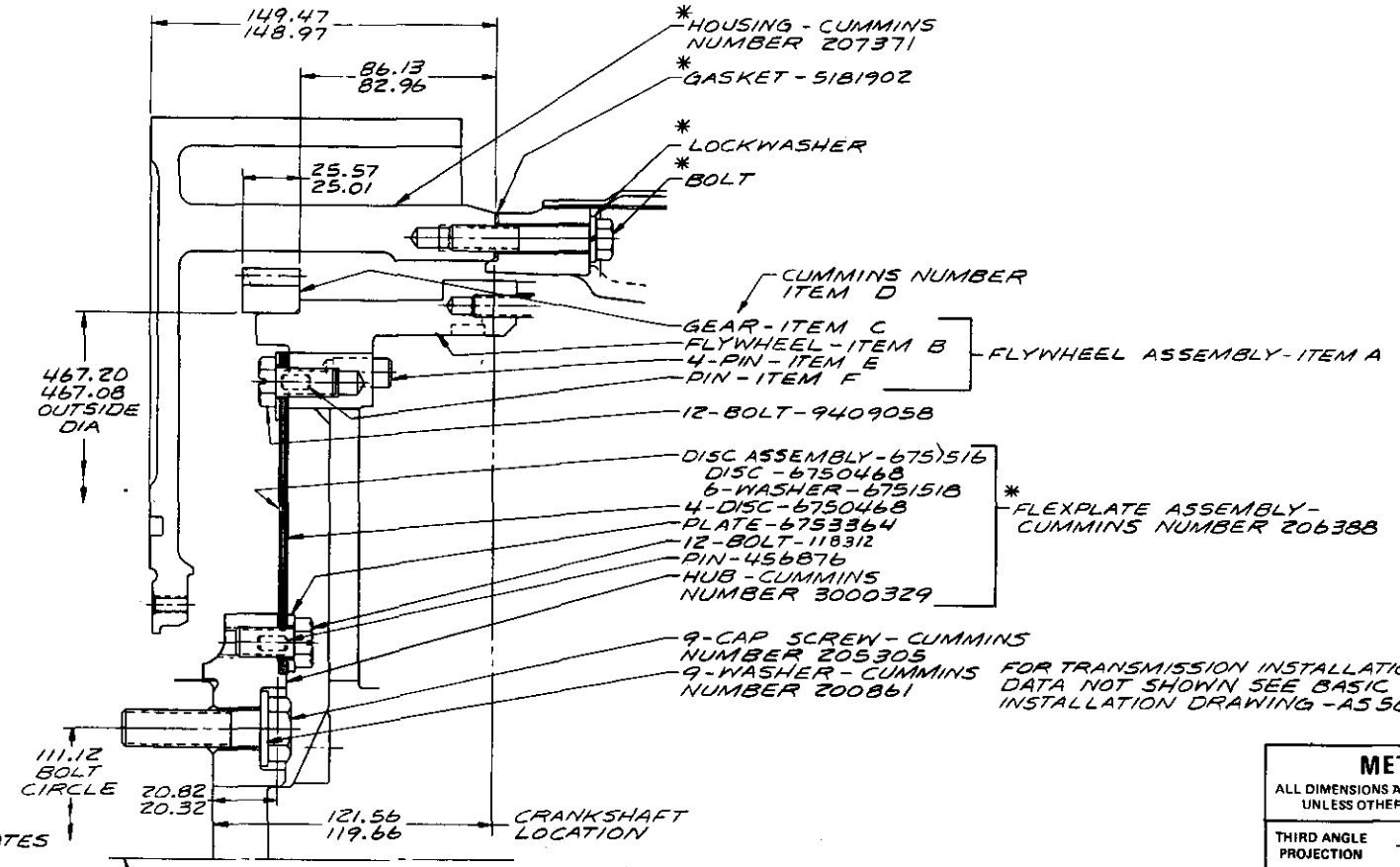

AS 04-164

FOR TRANSMISSION INSTALLATION DATA NOT SHOWN SEE BASIC INSTALLATION DRAWING - AS 58-029

THIS DRAWING ILLUSTRATES DESIGN STATUS ONLY. AVAILABILITY OF PARTS MUST BE OBTAINED FROM DETROIT DIESEL ALLISON SALES AND THE ENGINE MANUFACTURER

FOR TRANSMISSION DRIVE DATA NOT SHOWN SEE DRAWING AS 00-001

* DENOTES PARTS NOT SUPPLIED WITH TRANSMISSION ASSEMBLY

METRIC
ALL DIMENSIONS ARE IN MILLIMETRES, UNLESS OTHERWISE SPECIFIED

THIRD ANGLE PROJECTION

CHANGES

A	7-14-76	118312 W/A	9401 56
DRAWN HUGHES 11-8-74	CHECKED HUBELE 2-7-75	CHF DRAFTSMAN	
SCALE FULL	PROJ ENGR.	APPL ENGR ASHMAN 12-17-74	

Allison Transmissions

TITLE CUMMINS KT-1150 SERIES PHYSICAL ADAPTATION

MODEL 5/6000 SERIES AS 04-164

Detroit Diesel Allison Division of General Motors · Indianapolis, Indiana

FORM 8202-5

MILLIMETRES TO INCHES			
mm MIN/NOM	mm MAX	in. MIN/NOM	in. MAX
8.39	8.89	.330	.350
25.15	25.65	.990	1.010
76.56	79.60	3.014	3.134
98.58	100.53	3.8809	3.9579
106.68		4.2000	
165.64	166.14	6.521	6.541
469.37	469.49	18.479	18.484

ITEM	CAST IRON HOUSING	QTY	ALUMINUM HOUSING	QTY
A	5100476	1	5100477	1
B	103322	24	103322	24
C	179861	24	179862	24

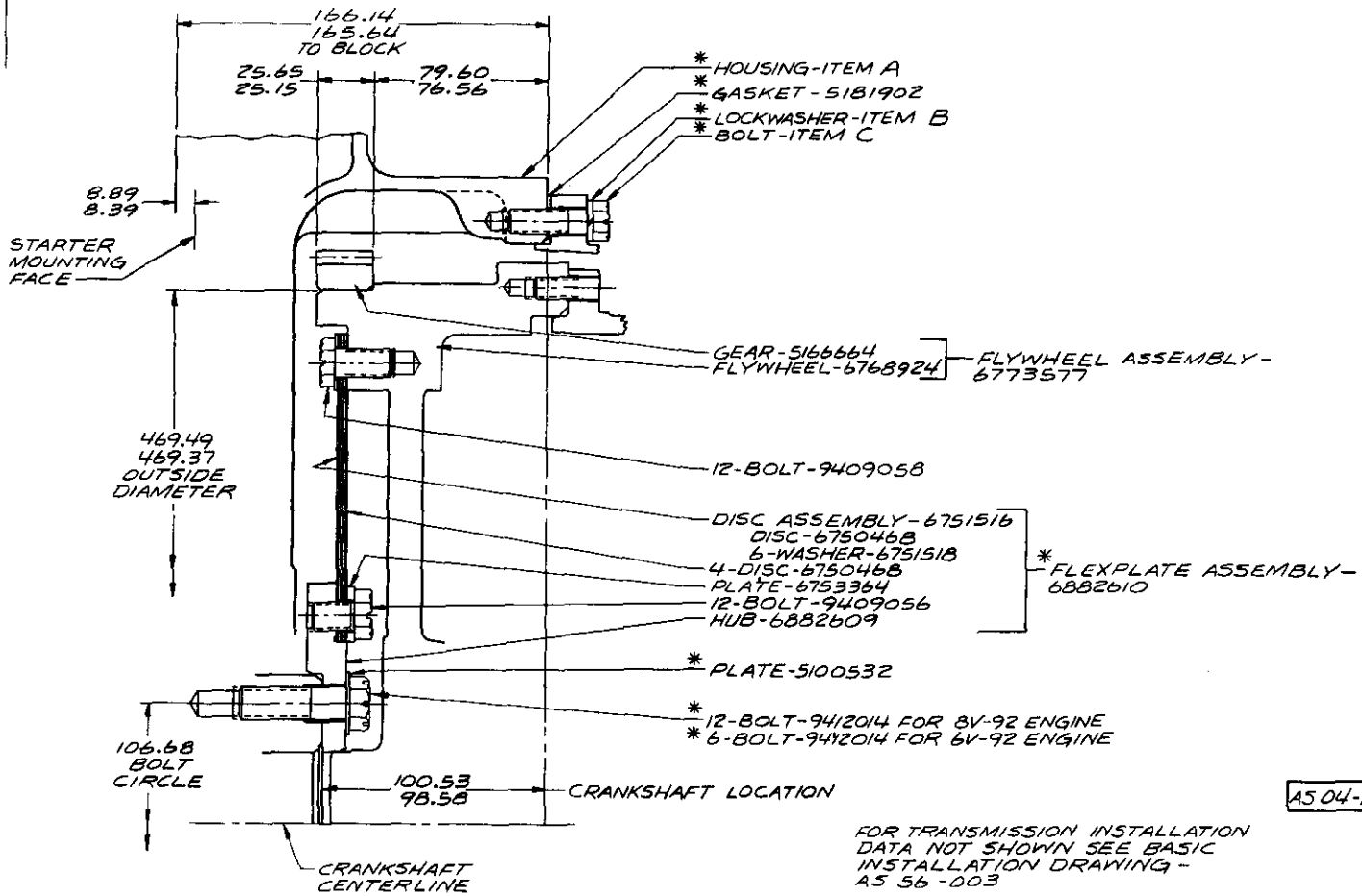

AS 04-165

FOR TRANSMISSION INSTALLATION DATA NOT SHOWN SEE BASIC INSTALLATION DRAWING - AS 56-003

THIS DRAWING ILLUSTRATES DESIGN STATUS ONLY AVAILABILITY OF PARTS MUST BE OBTAINED FROM DETROIT DIESEL ALLISON SALES

FOR TRANSMISSION DRIVE DATA NOT SHOWN SEE DRAWING - AS 00-001

* DENOTES PARTS NOT SUPPLIED WITH TRANSMISSION ASSEMBLY

METRIC
ALL DIMENSIONS ARE IN MILLIMETRES, UNLESS OTHERWISE SPECIFIED

THIRD ANGLE PROJECTION

Allison Transmissions

TITLE: DETROIT DIESEL-92 SERIES PHYSICAL ADAPTATION

MODEL CRT 5631 | AS 04-165

Detroit Diesel Allison Division of General Motors - Indianapolis, Indiana

MILLIMETRES TO INCHES			
mm MIN/NOM	mm MAX	in. MIN/NOM	in. MAX
2.57	2.71	.101	.107
8.39	8.89	.330	.350
	13.0		.512
22.51	23.01	.886	.906
22.76		.896	
25.15	25.65	.990	1.010
76.56	79.60	3.014	3.134
91.13	91.44	3.590	3.600
95.25		3.750	
165.61	166.12	6.520	6.540
152.40		6.000	
98.40	100.76	3.874	3.967
98.53	100.51	3.879	3.957

V-ENGINES				
ITEM	CAST IRON HOUSING	QTY	ALUMINUM HOUSING	QTY
A	5140661	1	5143941	1
B	103322	12	103322	12
C	427564	12	427564	12

IN-LINE ENGINES		
ITEM	CAST IRON HOUSING	QTY
A	5134423	1
B	103322	12
C	427564	12

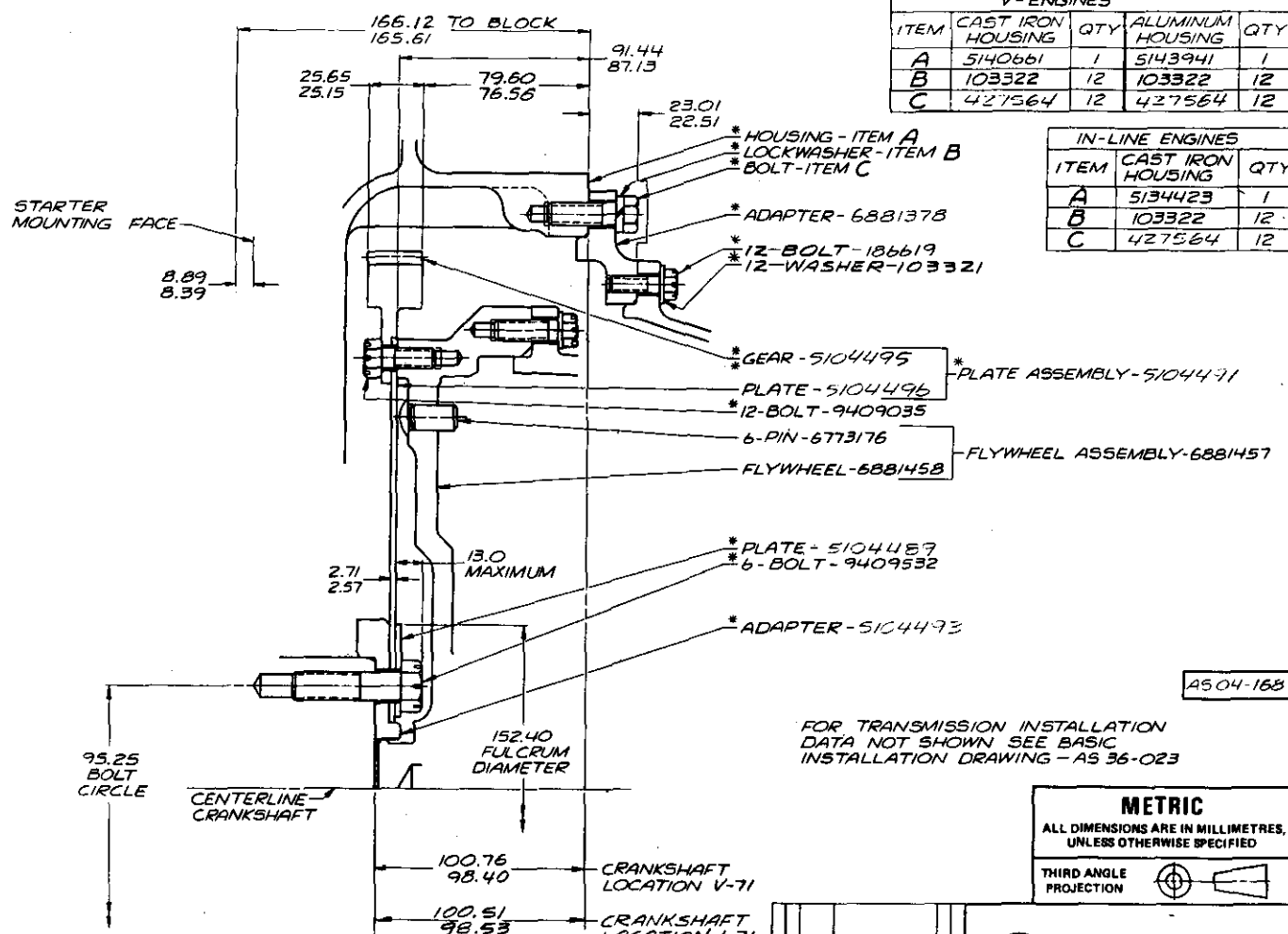

AS04-168

FOR TRANSMISSION INSTALLATION DATA NOT SHOWN SEE BASIC INSTALLATION DRAWING – AS 36-023

THIS DRAWING ILLUSTRATES DESIGN STATUS ONLY AVAILABILITY OF PARTS MUST BE OBTAINED FROM DETROIT DIESEL ALLISON SALES

* DENOTES PARTS NOT SUPPLIED WITH TRANSMISSION

FOR TRANSMISSION DRIVE DATA NOT SHOWN SEE DRAWING – AS 36-025

METRIC
ALL DIMENSIONS ARE IN MILLIMETRES, UNLESS OTHERWISE SPECIFIED

THIRD ANGLE PROJECTION

CHANGES			
A	11-8-76	CHANGED PART NUMBERS	

Allison Transmissions

TITLE: DETROIT DIESEL-71 SERIES SAE NUMBER 1 PHYSICAL ADAPTATION

MODEL MT 654 CR | AS04-103

Detroit Diesel Allison Division of General Motors · Indianapolis, Indiana

FORM 8202-S

MILLIMETRES TO INCHES			
mm MIN/NOM	mm MAX	in. MIN/NOM	in. MAX
2.57	2.71	.101	.107
8.39	8.89	.330	.350
	13.0		.51
22.51	23.01	.886	.906
25.15	25.65	.990	1.010
76.56	79.60	3.014	3.134
87.13	91.44	3.430	3.600
98.33	100.76	3.8713	3.9669
106.68		4.2000	
165.64	166.14	6.521	6.541

ITEM	CAST IRON HOUSING	QTY	ALUMINUM HOUSING	QTY
A	5100476	1	5100477	1
B	103322	12	103322	12
C	427564	12	427560	12

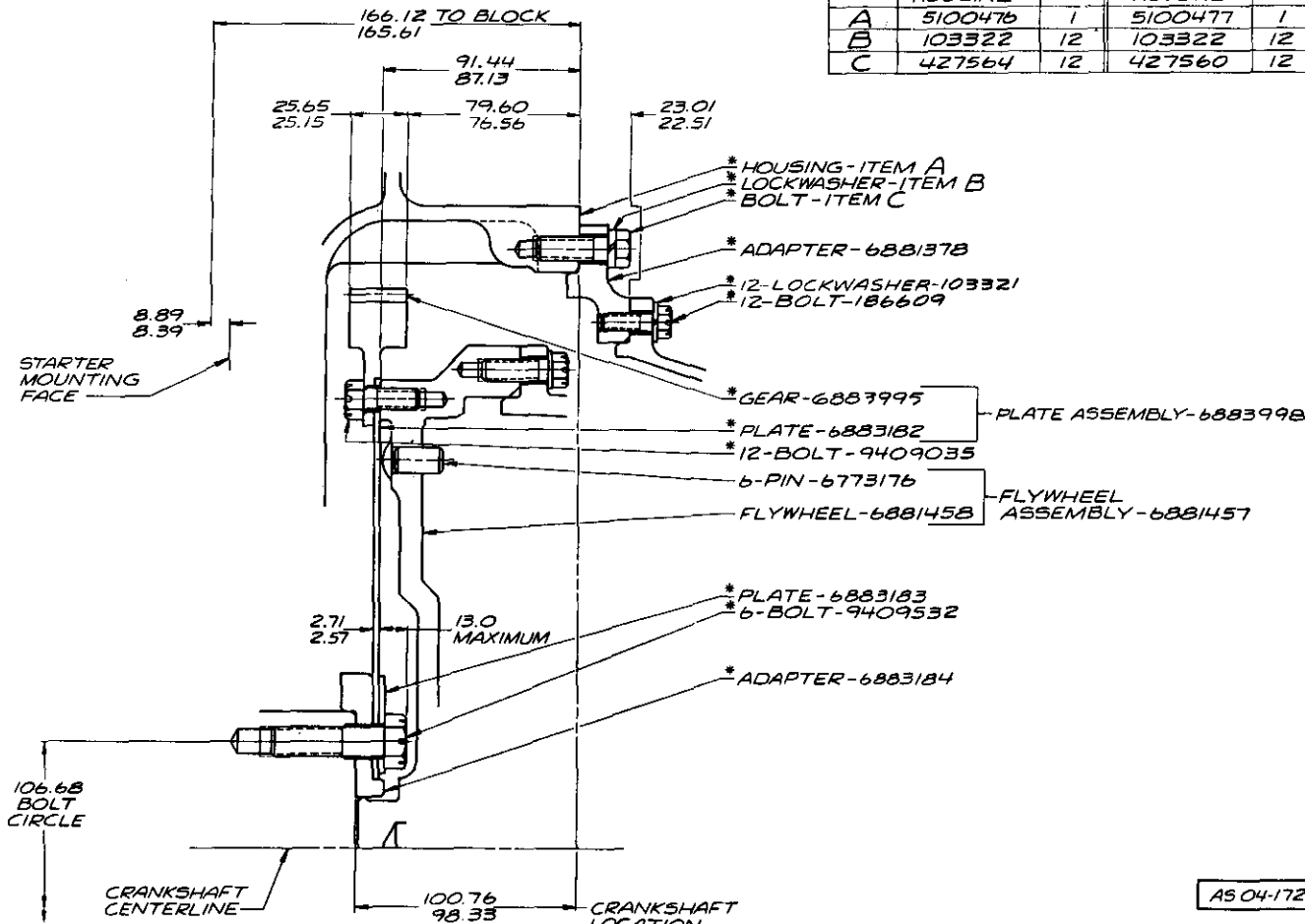

AS 04-172

FOR TRANSMISSION INSTALLATION DATA NOT SHOWN SEE BASIC INSTALLATION DRAWING – AS 36-023

THIS DRAWING ILLUSTRATES DESIGN STATUS ONLY AVAILABILITY OF PARTS MUST BE OBTAINED FROM DETROIT DIESEL ALLISON SALES

FOR TRANSMISSION DRIVE DATA NOT SHOWN SEE DRAWING – AS 36-025

* DENOTES PARTS NOT SUPPLIED WITH TRANSMISSION ASSEMBLY

PRELIMINARY

THIS DRAWING HAS NOT BEEN RELEASED AND THE RECIPIENT ASSUMES RESPONSIBILITY FOR DETERMINATION OF CURRENT STATUS

DESTROY ALL PRIOR TO THIS ISSUE 9-20-76

METRIC

ALL DIMENSIONS ARE IN MILLIMETRES, UNLESS OTHERWISE SPECIFIED

THIRD ANGLE PROJECTION

CHANGES

DRAWN	CHECKED	CHF DRAFTSMAN
D. NEW 8-18-76		
SCALE FULL	PROJ ENGR	9-21-76

Allison Transmissions

TITLE DETROIT DIESEL-92 SERIES SAE NUMBER 1 PHYSICAL ADAPTATION

MODEL MT 654 CR | AS 04-172

Detroit Diesel Allison Division of General Motors · Indianapolis, Indiana

MILLIMETRES TO INCHES			
mm MIN/NOM	mm MAX	in. MIN/NOM	in. MAX
2.57	2.71	.101	.107
8.39	8.89	.330	.350
	13.0		.51
22.51	23.01	.886	.906
29.85	30.35	1.175	1.195
87.13	91.44	3.430	3.600
106.68		4.2000	
111.89	114.25	4.4051	4.498
117.00	122.22	4.606	4.812
179.13	179.62	7.052	7.072

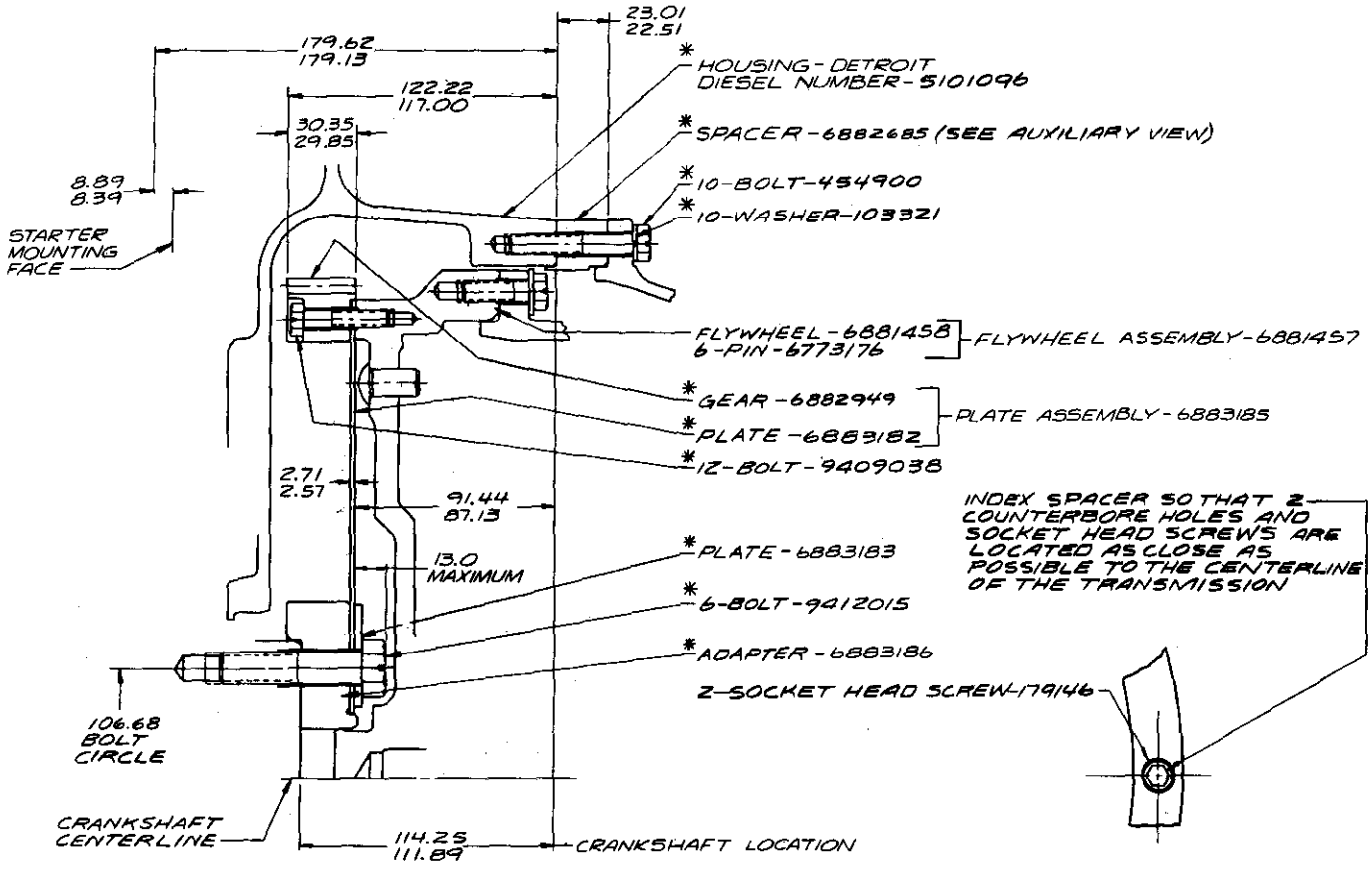

AS 04-173

FOR TRANSMISSION INSTALLATION DATA NOT SHOWN SEE BASIC INSTALLATION DRAWING - AS 36-023

THIS DRAWING ILLUSTRATES DESIGN STATUS ONLY AVAILABILITY OF PARTS MUST BE OBTAINED FROM DETROIT DIESEL ALLISON SALES

FOR TRANSMISSION DRIVE DATA NOT SHOWN SEE DRAWING - AS 36-025

* DENOTES PARTS NOT SUPPLIED WITH TRANSMISSION ASSEMBLY

METRIC
ALL DIMENSIONS ARE IN MILLIMETRES, UNLESS OTHERWISE SPECIFIED

THIRD ANGLE PROJECTION

Allison Transmissions

D. WEEK 12-12-74	G.U.E.S.H 5-12-76	J.W.Ray 5-18-76
SCALE FULL	J.A.WELCH 4-15-76	D.A.L.C.S. 12-17-74

TITLE: DETROIT DIESEL 92 SERIES SAE NO. 2 PHYSICAL ADAPTATION

MODEL MT 654 CR | AS 04-173

MILLIMETRES TO INCHES			
mm MIN/NOM	mm MAX	in. MIN/NOM	in. MAX
2.57	2.71	.101	.107
8.39	8.89	.330	.350
	13.0		.51
22.51	23.01	.886	.906
29.85	30.35	1.175	1.195
87.13	91.44	3.430	3.600
95.25		3.7500	
117.00	122.22	4.606	4.812
179.13	179.62	7.052	7.072
111.89	114.25	4.405	4.498
112.01	113.94	4.410	4.486

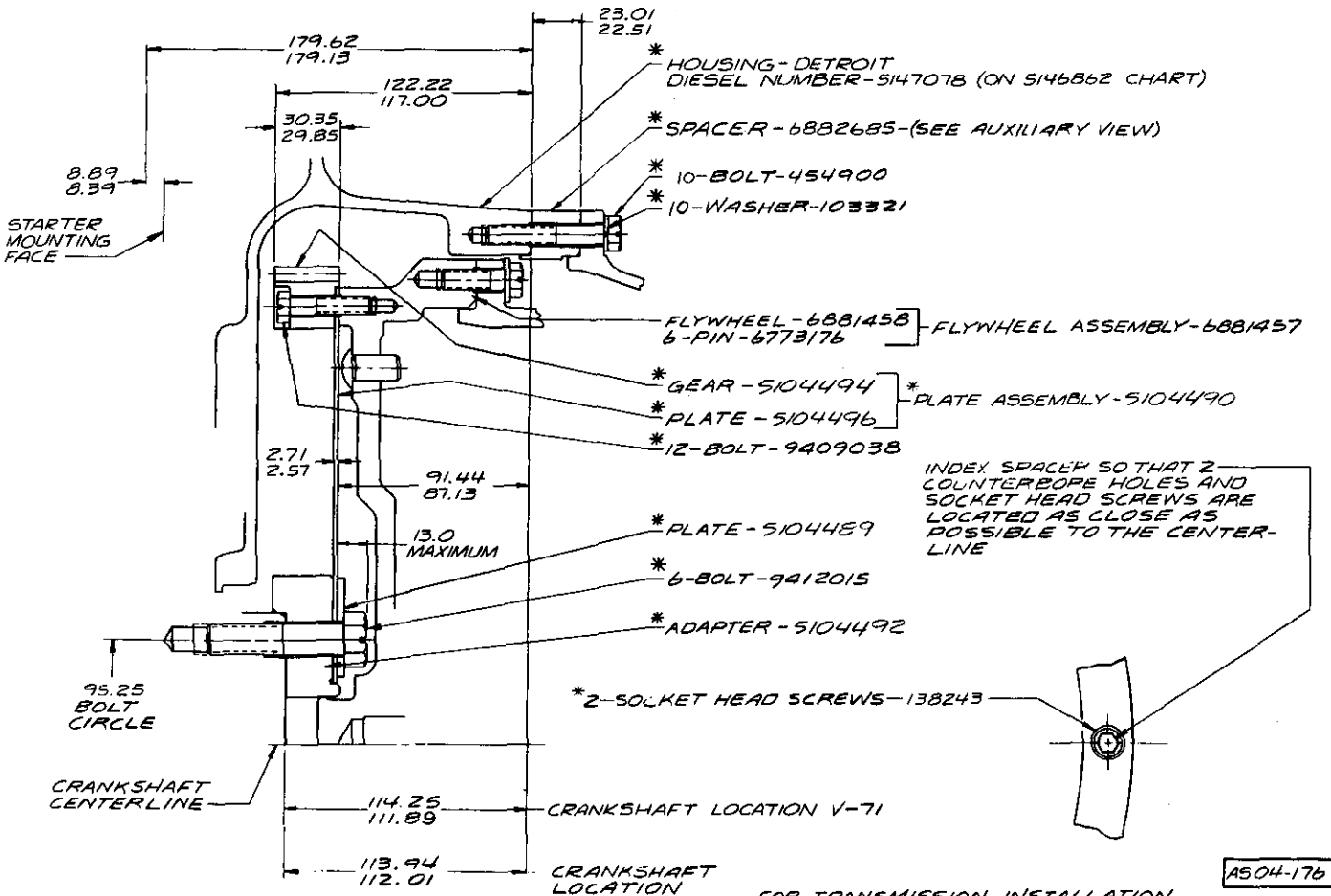

AS04-176

FOR TRANSMISSION INSTALLATION DATA NOT SHOWN SEE BASIC INSTALLATION DRAWING - AS 36-023

THIS DRAWING ILLUSTRATES DESIGN STATUS ONLY AVAILABILITY OF PARTS MUST BE OBTAINED FROM DETROIT DIESEL ALLISON SALES

FOR TRANSMISSION DRIVE DATA NOT SHOWN SEE DRAWING - AS 36-025

* DENOTES PARTS NOT SUPPLIED WITH TRANSMISSION ASSEMBLY

METRIC
ALL DIMENSIONS ARE IN MILLIMETRES, UNLESS OTHERWISE SPECIFIED

THIRD ANGLE PROJECTION

CHANGES

A	11-8-76	CHANGED PART NUMBERS	HP HC

DRAWN D. NEW
12-8-75
SCALE FULL

Allison Transmissions

TITLE DETROIT DIESEL 71 SERIES SAE NO. 2 PHYSICAL ADAPTATION

MODEL MT 654 CR AS04-176

Detroit Diesel Allison Division of General Motors - Indianapolis, Indiana

REF-XAS 05-029

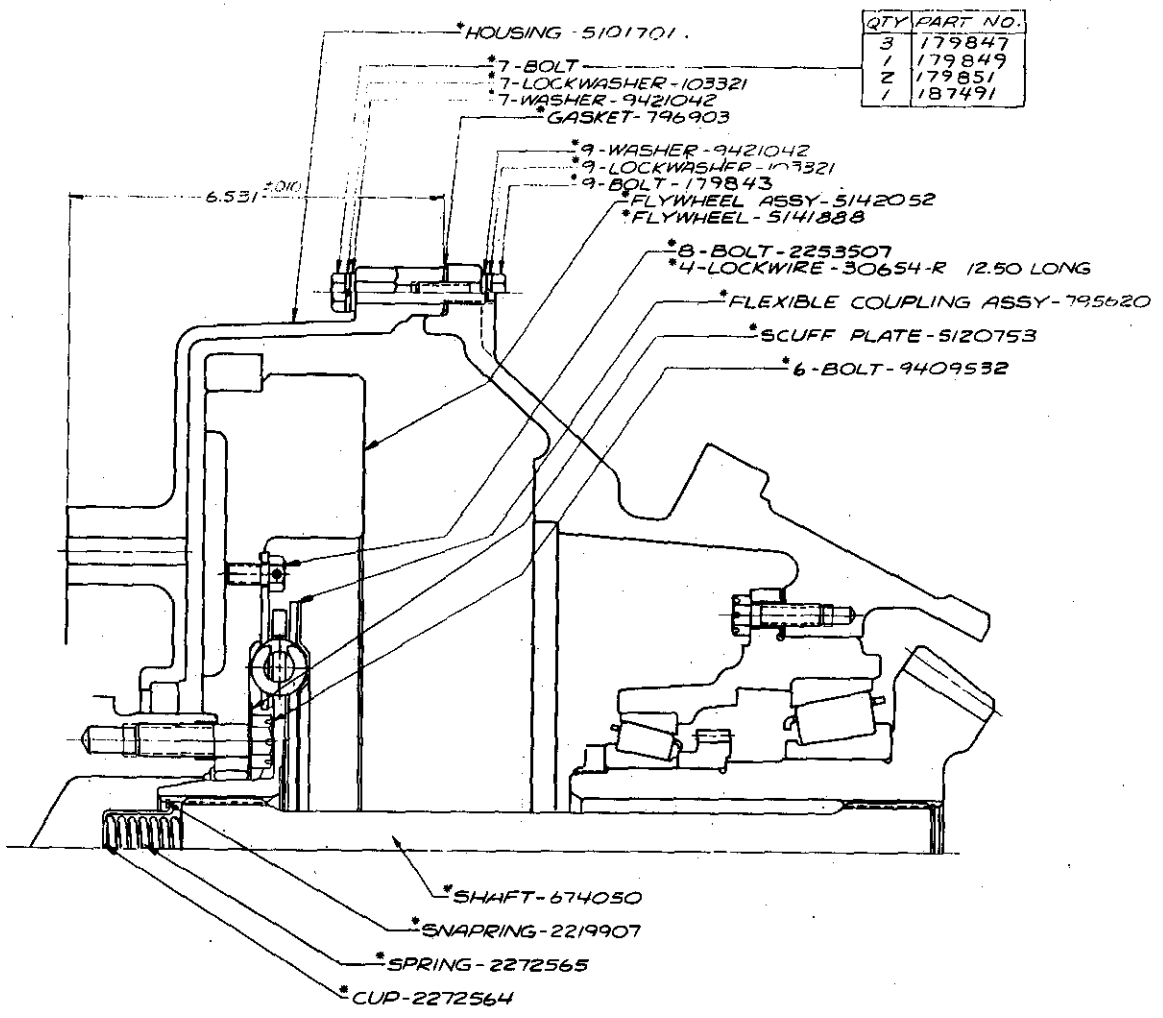

QTY	PART NO.
3	179847
1	179849
2	179851
1	187491

AS 04-180

FOR TRANSMISSION INSTALLATION DATA NOT SHOWN SEE BASIC INSTALLATION DRAWING NO. AS 02-035

THIS DRAWING ILLUSTRATES DESIGN STATUS ONLY AVAILABILITY OF PARTS MUST BE OBTAINED FROM DETROIT DIESEL ALLISON SALES

FOR TRANSMISSION DRIVE DATA NOT SHOWN SEE DRAWING NO. AS 02-021

* DENOTES PARTS NOT SUPPLIED WITH THE TRANSMISSION ASSEMBLY

CHANGES			
A	5-31-77	REVISED BOLT PART NOS	

Allison Transmissions

TITLE DETROIT DIESEL 6V71 PHYSICAL ADAPTATION

MODEL V730 D | AS 04-180

Detroit Diesel Allison Division of General Motors Indianapolis, Indiana

DRAWN C.F.H. 1-21-76 | DESIGN H. CLARK 1-28-76 | CHECKED 1-29-76 | APPL. ENGR. H. TROTTER 1-29-76

SCALE FULL

MILLIMETRES TO INCHES			
mm MIN/NOM	mm MAX	in. MIN/NOM	in. MAX
0.34	0.48	.013	.019
20.73	21.23	.816	.836
86.70	91.24	3.413	3.592
108.59	110.94	4.275	4.368
184.15		7.250	
406.40		16.000	

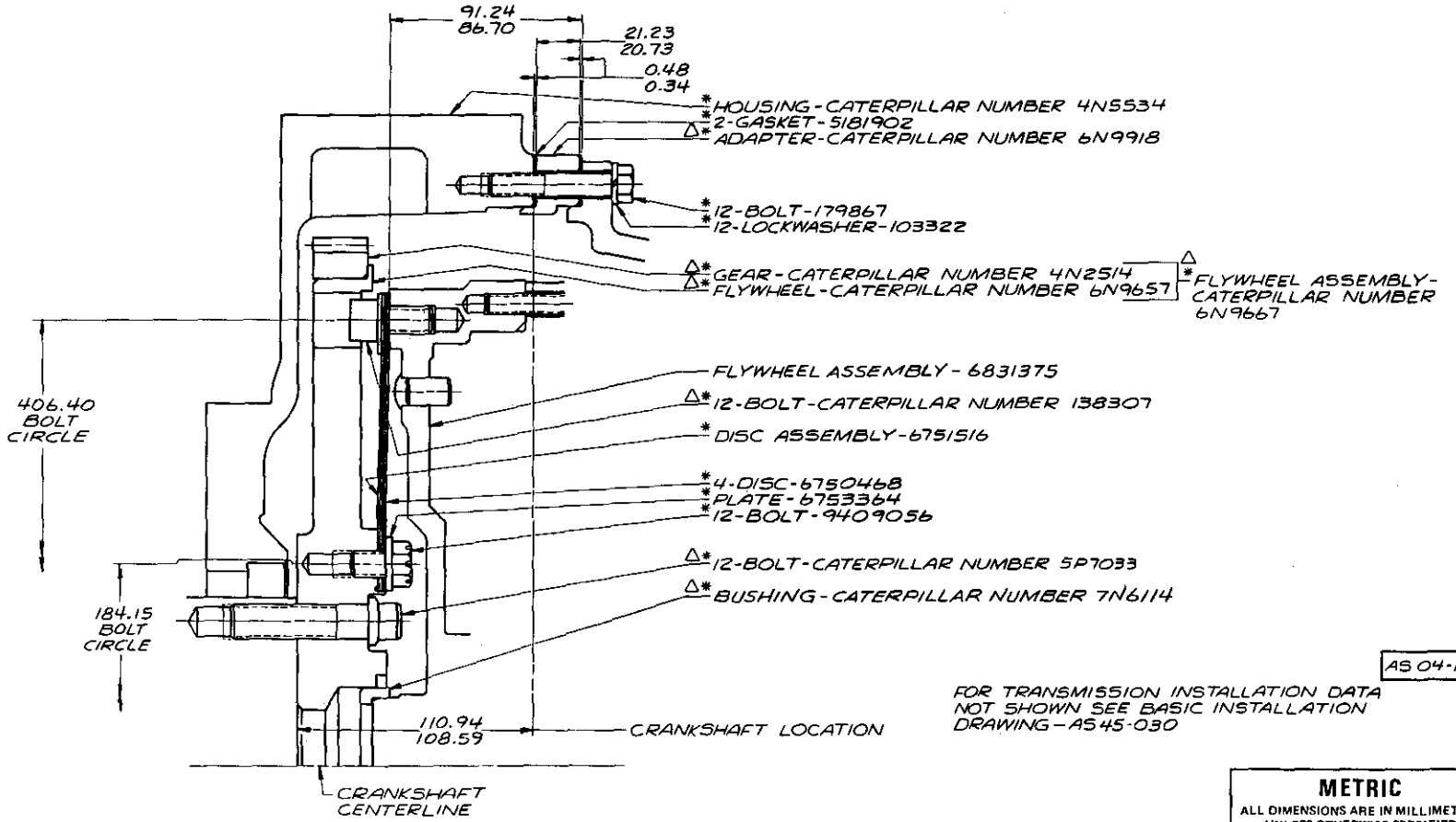

AS 04-181

FOR TRANSMISSION INSTALLATION DATA NOT SHOWN SEE BASIC INSTALLATION DRAWING – AS 45-030

THIS DRAWING ILLUSTRATES DESIGN STATUS ONLY. AVAILABILITY OF PARTS MUST BE OBTAINED FROM DETROIT DIESEL ALLISON SALES AND THE ENGINE MANUFACTURER

FOR TRANSMISSION DRIVE DATA NOT SHOWN SEE DRAWING - AS 00-001

* DENOTES PARTS NOT SUPPLIED WITH TRANSMISSION ASSEMBLY

△ DENOTES PARTS INCLUDED IN FLYWHEEL ADAPTER GROUP - CATERPILLAR NUMBER 6N9829

METRIC
ALL DIMENSIONS ARE IN MILLIMETRES, UNLESS OTHERWISE SPECIFIED

THIRD ANGLE PROJECTION

CHANGES

DRAWN	CHECKED	CHF DRAFTSMAN
D. NEW 9-23-76	S. GEARY 2-17-77	
SCALE FULL	PROJ. ENGR	APPL. ENGR LAUGHLIN 2-18-77

Allison Transmissions

TITLE PHYSICAL ADAPTATION, CATERPILLAR 3406 AND 3408 SERIES ENGINE

MODEL 700 SERIES | AS 04-181

Detroit Diesel Allison Division of General Motors, Indianapolis, Indiana

FORM 8202 S

MILLIMETRES TO INCHES			
mm MIN/NOM	mm MAX	in. MIN/NOM	in. MAX
8.39	8.89	.330	.350
25.15	25.65	.990	1.010
76.56	79.60	3.014	3.134
98.58	100.53	3.8809	3.9579
106.68		4.2000	
165.64	166.14	6.521	6.541
469.37	469.49	18.479	18.484

ITEM	CAST IRON HOUSING	QTY	ALUMINUM HOUSING	QTY
A	5100476	1	5100477	1
B	179861	24	179862	24

ITEM	UNIVERSAL TYPE GEAR	BENDIX TYPE GEAR
C	5184773	5166664
D	6883521	6883522

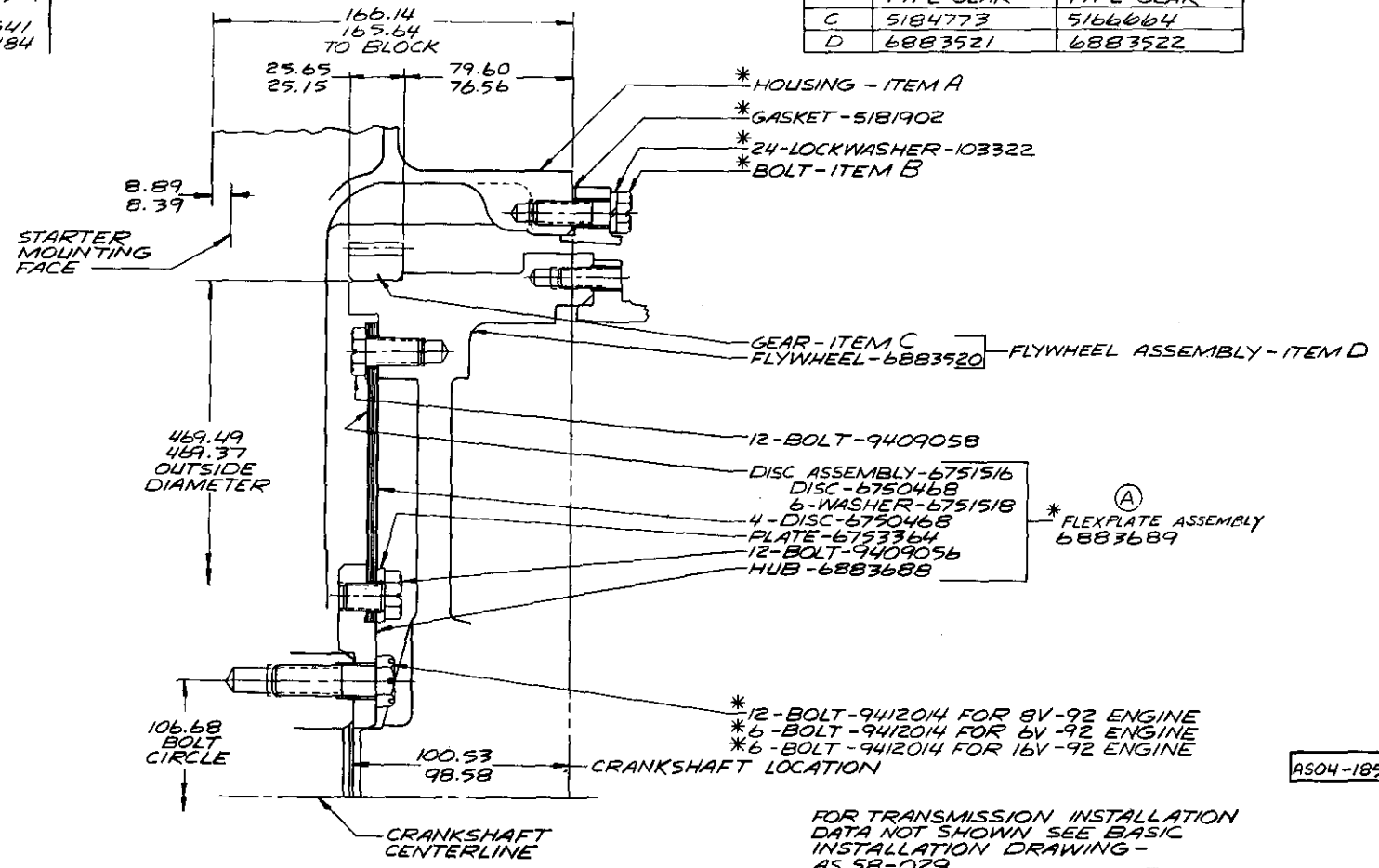

AS04-185

FOR TRANSMISSION INSTALLATION DATA NOT SHOWN SEE BASIC INSTALLATION DRAWING - AS 58-029

FOR TRANSMISSION DRIVE DATA NOT SHOWN SEE DRAWING - AS 00-001

*DENOTES PART NOT SUPPLIED WITH TRANSMISSION ASSEMBLY

THIS DRAWING ILLUSTRATES DESIGN STATUS ONLY. AVAILABILITY OF PARTS MUST BE OBTAINED FROM DETROIT DIESEL ALLISON SALES

METRIC
ALL DIMENSIONS ARE IN MILLIMETRES, UNLESS OTHERWISE SPECIFIED

THIRD ANGLE PROJECTION

CHANGES

A	2-10-77	WAS FLYWHEEL ASSY.	JB

DRAWN POWELL 6-29-76 | CHECKED HUBELE 8-18-76 | CHK. DRAFTSMAN 8-18-76 | SCALE FULL | PROJ. ENGR. | APPL. ENGR. ASHMAN 7-2-76

Allison Transmissions

TITLE: PHYSICAL ADAPTATION, DETROIT DIESEL 92 SERIES

MODEL CLBT 5/6000 | AS04-185

Detroit Diesel Allison Division of General Motors · Indianapolis, Indiana

FORM 8202-S

MILLIMETRES TO INCHES			
mm MIN/NOM	mm MAX	in. MIN/NOM	in. MAX
	1.02		.040
1.2	3.3	.05	.13
1.22		.048	
	1.52		.06
	3.04		.12
5.08		.200	
	6.35		.250
7.6		.30	
	8.63		.340
16.8		.66	
17.02		.670	
32.8		1.29	
61.82	61.87	2.434	2.436
65.02		2.56	
89.28		3.515	
227.53		8.958	
314.4	317.5	12.38	12.50
400.05		15.75	
	418.97		16.495
	444.5		17.50

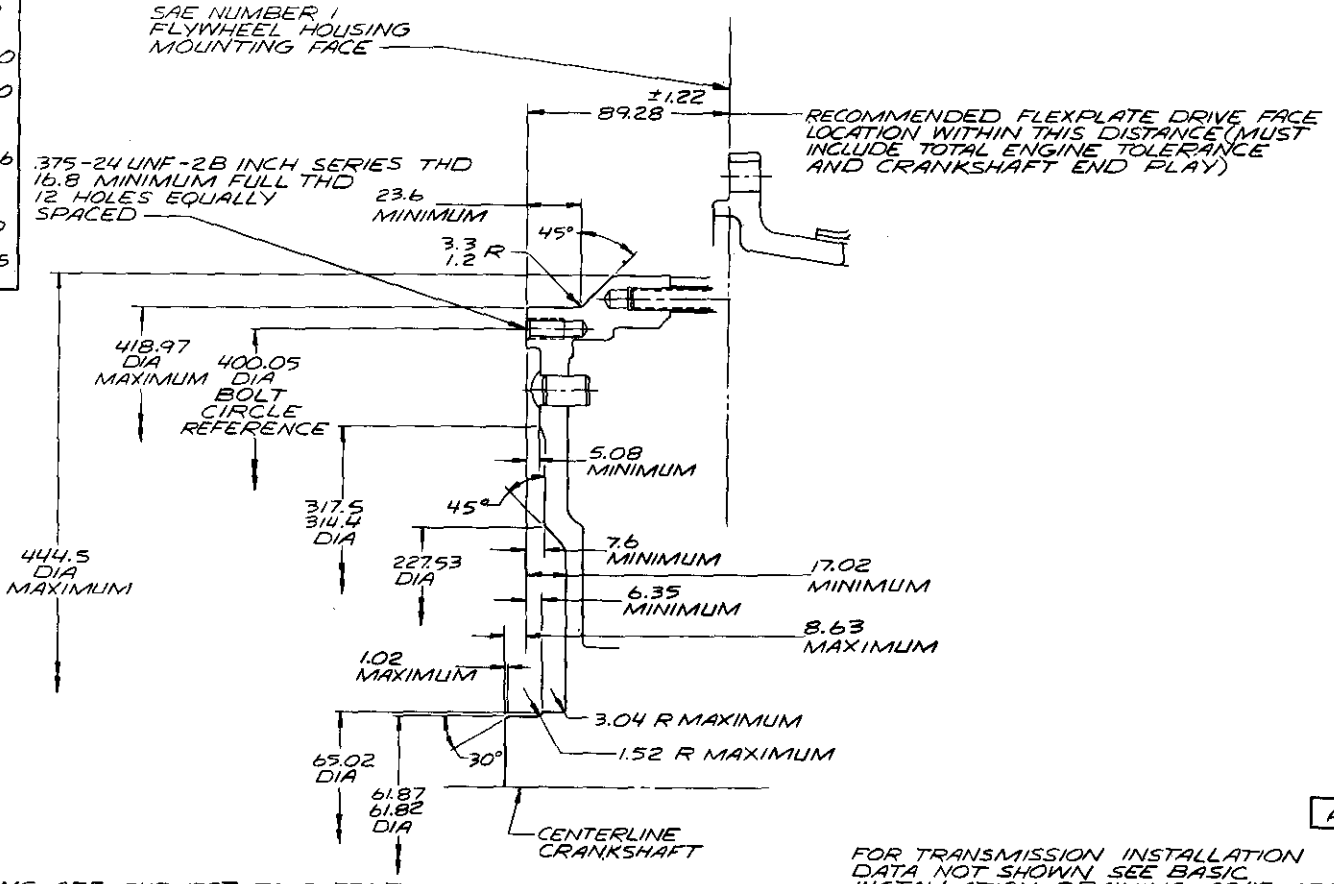

AS 04-186

FOR TRANSMISSION INSTALLATION DATA NOT SHOWN SEE BASIC INSTALLATION DRAWING AS45-030

ALL PHYSICAL ADAPTATIONS ARE SUBJECT TO DETROIT DIESEL ALLISON DIVISION GMC TRANSMISSION ENGINEERING DEPARTMENT REVIEW PRIOR TO INSTALLATION APPROVAL

ENGINE FLYWHEEL HOUSING AND FLYWHEEL PILOT DIAMETERS MUST MEET SAE CONCENTRICITY REQUIREMENTS

METRIC

ALL DIMENSIONS ARE IN MILLIMETRES, UNLESS OTHERWISE SPECIFIED

THIRD ANGLE PROJECTION

CHANGES

DRAWN	CHECKED	DIR. DRAFTSMAN
POWELL 6-24-76	[illegible] 12-14-76	[illegible] 12-14-76
SCALE FULL	PROJ. ENGR.	APPL. ENGR. D.R. LAUGHLIN 6-25-76

Allison Transmissions

TITLE: UNIVERSAL FLYWHEEL ADAPTATION REQUIREMENTS

MODEL HT 700 | AS04-186

Detroit Diesel Allison Division of General Motors - Indianapolis, Indiana

FORM 8202-S

MILLIMETRES TO INCHES			
mm MIN/NOM	mm MAX	in. MIN/NOM	in. MAX
0.34	0.48	.013	.019
20.73	21.23	.816	.836
37.09	40.89	1.460	1.610
86.98	89.94	3.424	3.541
108.58	110.94	4.275	4.368
184.15		7.250	
406.40		16.000	

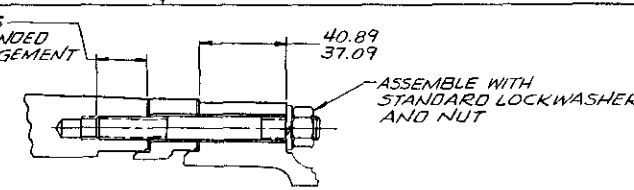

TYPICAL STUD INSTALLATION REQUIRED AT 8 POSITIONS MARKED A

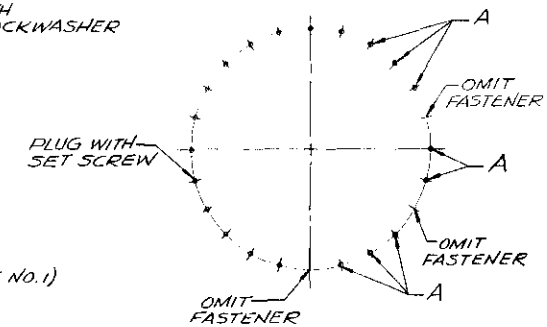

PICTORIAL VIEW OF ENGINE FLYWHEEL HOUSING LOOKING FORWARD

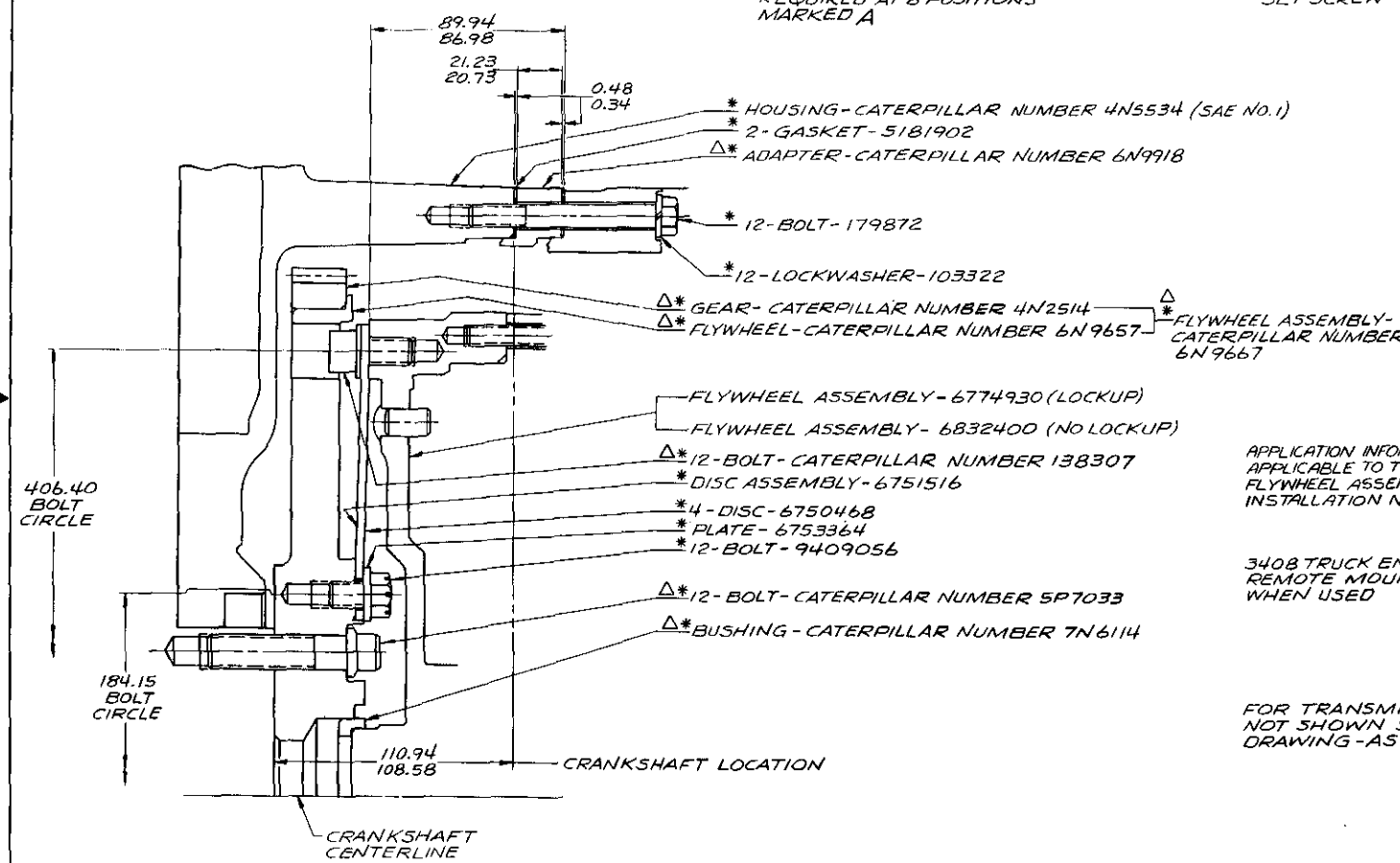

APPLICATION INFORMATION ALSO APPLICABLE TO TC 500 WITH 6832400 FLYWHEEL ASSEMBLY, EXCEPT STUD INSTALLATION NOT REQUIRED

3408 TRUCK ENGINE ADAPTATION REQUIRES REMOTE MOUNTED AIR COMPRESSOR WHEN USED

AS 04-196

FOR TRANSMISSION INSTALLATION DATA NOT SHOWN SEE BASIC INSTALLATION DRAWING - AS58-029

THIS DRAWING ILLUSTRATES DESIGN STATUS ONLY. AVAILABILITY OF PARTS MUST BE OBTAINED FROM DETROIT DIESEL ALLISON SALES AND THE ENGINE MANUFACTURER

FOR TRANSMISSION DRIVE DATA NOT SHOWN SEE DRAWING - AS00-001

* DENOTES PARTS NOT SUPPLIED WITH TRANSMISSION ASSEMBLY

Δ DENOTES PARTS INCLUDED IN FLYWHEEL ADAPTER GROUP - CATERPILLAR NUMBER 6N9829

METRIC

ALL DIMENSIONS ARE IN MILLIMETRES, UNLESS OTHERWISE SPECIFIED

THIRD ANGLE PROJECTION

CHANGES			
A	9-1-77	ADDED TC 500 INFORMATION NOTE	SM

DRAWN	CHECKED	DIR. DRAFTSMAN
LARSEN 2-17-77	HUBELE 3-7-77	[illegible] 3-7-77
SCALE FULL	PROJ. ENGR	APPL. ENGR ASHMAN 2-28-77

Allison Transmissions

TITLE PHYSICAL ADAPTATION, CATERPILLAR 3406 AND 3408 SERIES ENGINE

MODEL 5/6000 SERIES AS 04-196

Detroit Diesel Allison Division of General Motors - Indianapolis, Indiana

FORM 8207 S

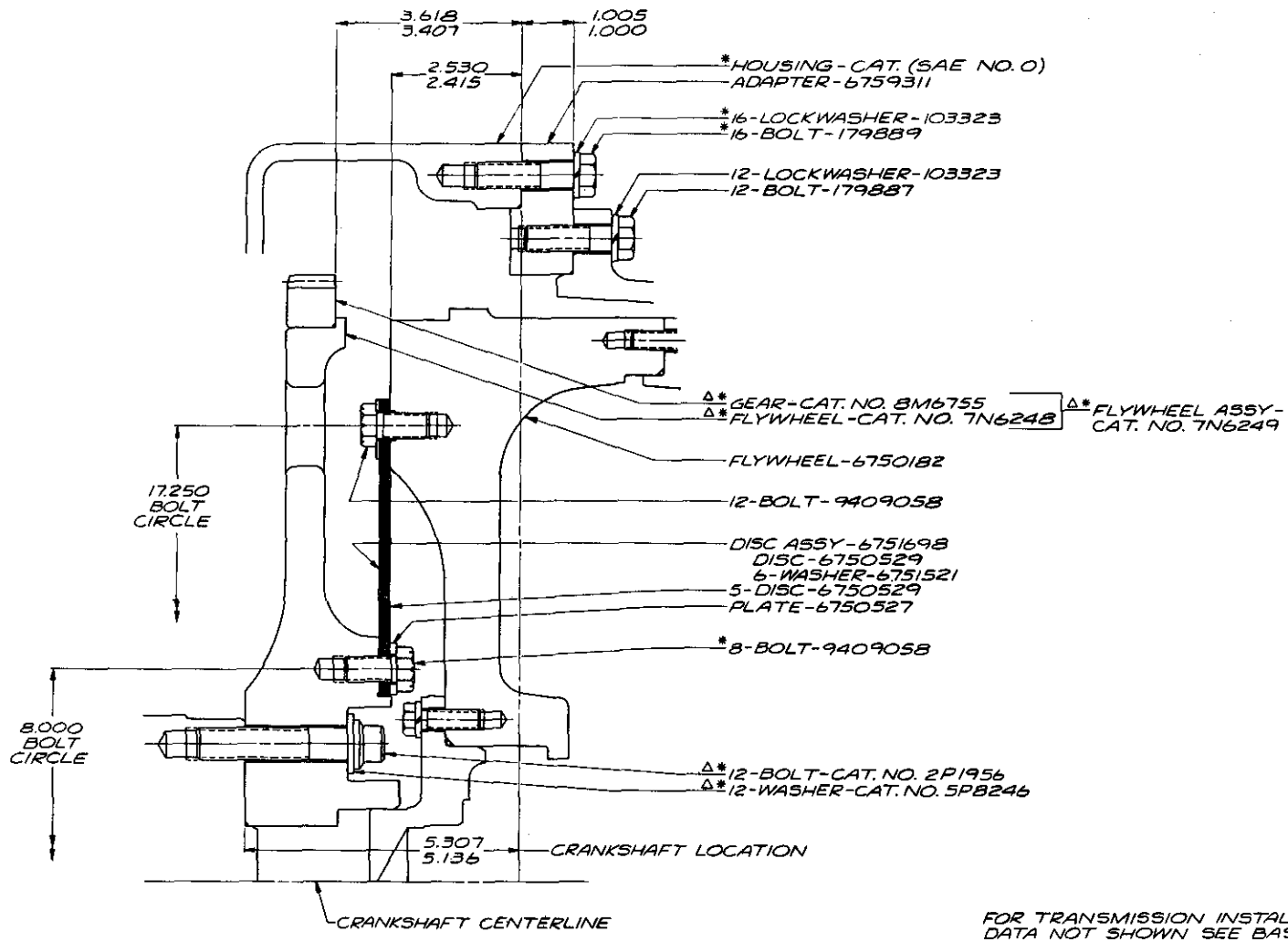

AS04-198

FOR TRANSMISSION INSTALLATION DATA NOT SHOWN SEE BASIC INSTALLATION DRAWING – AS 81-004

THIS DRAWING ILLUSTRATES DESIGN STATUS ONLY AVAILABILITY OF PARTS MUST BE OBTAINED FROM DETROIT DIESEL ALLISON SALES AND THE ENGINE MANUFACTURER

FOR TRANSMISSION DRIVE DATA NOT SHOWN SEE DRAWING – AS 00-015

* DENOTES PARTS NOT SUPPLIED WITH TRANSMISSION ASSEMBLY

Δ DENOTES PARTS INCLUDED IN FLYWHEEL ADAPTER GROUP – CAT. NO. 7N6291

CHANGES

DRAWN	CHECKED	ENG. DRAFTSMAN
D. NEW 7-1-77	F. W. M. 7-11-77	[illegible] 7-11-77
SCALE FULL	PROJ. ENGR.	APPL. ENGR. D. LAUGHLIN 7-6-77

Allison Transmissions

TITLE PHYSICAL ADAPTATION, CATERPILLAR 3408/3412 ENGINE

MODEL TC 800/900 | AS04-198

Detroit Diesel Allison Division of General Motors - Indianapolis, Indiana

FORM 8202 S

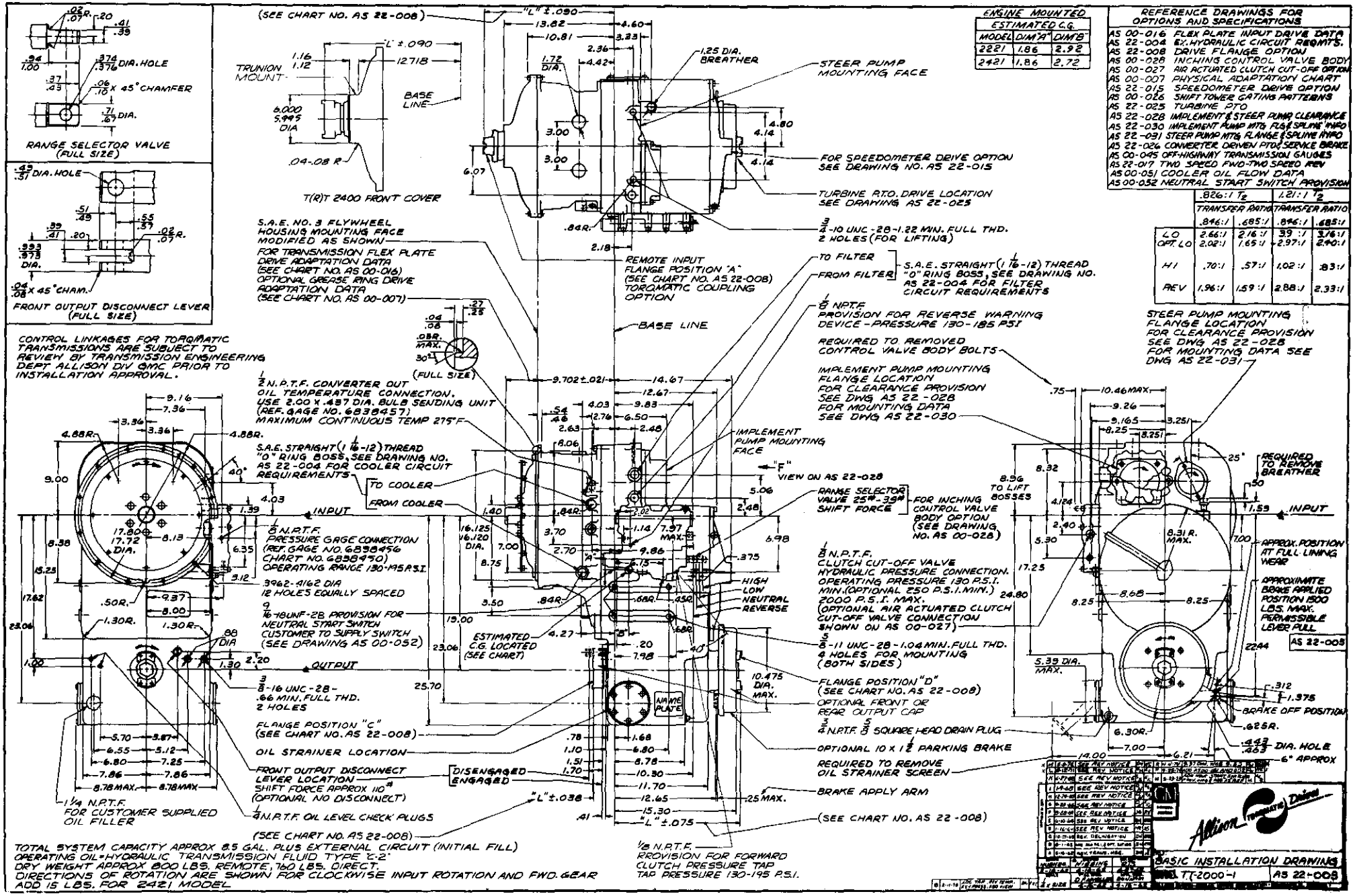
RANGE SELECTOR VALVE (FULL SIZE)
FRONT OUTPUT DISCONNECT LEVER (FULL SIZE)
T(R)T 2400 FRONT COVER
(SEE CHART NO. AS 22-008)
TRUNION MOUNT
BASE LINE
S.A.E. NO. 3 FLYWHEEL HOUSING MOUNTING FACE MODIFIED AS SHOWN FOR TRANSMISSION FLEX PLATE DRIVE ADAPTATION DATA (SEE CHART NO. AS 00-016) OPTIONAL GREASE RING DRIVE ADAPTATION DATA (SEE CHART NO. AS 00-007)
CONTROL LINKAGES FOR TORQMATIC TRANSMISSIONS ARE SUBJECT TO REVIEW BY TRANSMISSION ENGINEERING DEPT. ALLISON DIV. GMC PRIOR TO INSTALLATION APPROVAL.
1/2 N.P.T.F. CONVERTER OUT OIL TEMPERATURE CONNECTION. USE 2.00 X .437 DIA. BULB SENDING UNIT (REF. GAGE NO. 6838457) MAXIMUM CONTINUOUS TEMP 275°F
S.A.E. STRAIGHT (1 1/16-12) THREAD "O" RING BOSS, SEE DRAWING NO. AS 22-004 FOR COOLER CIRCUIT REQUIREMENTS
TO COOLER
FROM COOLER
INPUT
1/8 N.P.T.F. PRESSURE GAGE CONNECTION (REF. GAGE NO. 6838456 CHART NO. 6838470) OPERATING RANGE 130-185 P.S.I.
3962-4162 DIA 12 HOLES EQUALLY SPACED
9/16-18UNF-2B PROVISION FOR NEUTRAL START SWITCH CUSTOMER TO SUPPLY SWITCH (SEE DRAWING AS 00-052)
OUTPUT
3/8-16 UNC-2B-.66 MIN. FULL THD. 2 HOLES
FLANGE POSITION "C" (SEE CHART NO. AS 22-008)
OIL STRAINER LOCATION
FRONT OUTPUT DISCONNECT LEVER LOCATION SHIFT FORCE APPROX 110# (OPTIONAL NO DISCONNECT)
DISENGAGED
ENGAGED
1 1/4 N.P.T.F. FOR CUSTOMER SUPPLIED OIL FILLER
1/4 N.P.T.F. OIL LEVEL CHECK PLUGS
(SEE CHART NO. AS 22-008)
TOTAL SYSTEM CAPACITY APPROX 8.5 GAL. PLUS EXTERNAL CIRCUIT (INITIAL FILL)
OPERATING OIL-HYDRAULIC TRANSMISSION FLUID TYPE C-2
DRY WEIGHT APPROX 800 LBS. REMOTE, 760 LBS. DIRECT.
DIRECTIONS OF ROTATION ARE SHOWN FOR CLOCKWISE INPUT ROTATION AND FWD. GEAR
ADD 15 LBS. FOR 2421 MODEL
"L" ±.090
1.25 DIA. BREATHER
STEER PUMP MOUNTING FACE
FOR SPEEDOMETER DRIVE OPTION SEE DRAWING NO. AS 22-015
TURBINE P.T.O. DRIVE LOCATION SEE DRAWING AS 22-025
3/4-10 UNC-2B-1.22 MIN. FULL THD. 2 HOLES (FOR LIFTING)
REMOTE INPUT FLANGE POSITION "A" (SEE CHART NO. AS 22-008) TORQMATIC COUPLING OPTION
BASE LINE
TO FILTER
FROM FILTER
S.A.E. STRAIGHT (1 1/16-12) THREAD "O" RING BOSS, SEE DRAWING NO. AS 22-004 FOR FILTER CIRCUIT REQUIREMENTS
1/8 NPTF PROVISION FOR REVERSE WARNING DEVICE - PRESSURE 130-185 PSI
REQUIRED TO REMOVED CONTROL VALVE BODY BOLTS
IMPLEMENT PUMP MOUNTING FLANGE LOCATION FOR CLEARANCE PROVISION SEE DWG AS 22-028 FOR MOUNTING DATA SEE DWG AS 22-030
IMPLEMENT PUMP MOUNTING FACE
"F" VIEW ON AS 22-028
RANGE SELECTOR VALVE 25#-35# SHIFT FORCE
FOR INCHING CONTROL VALVE BODY OPTION (SEE DRAWING NO. AS 00-028)
1/8 N.P.T.F. CLUTCH CUT-OFF VALVE HYDRAULIC PRESSURE CONNECTION. OPERATING PRESSURE 130 P.S.I. MIN. (OPTIONAL 250 P.S.I. MIN.) 2000 P.S.I. MAX. (OPTIONAL AIR ACTUATED CLUTCH CUT-OFF VALVE CONNECTION SHOWN ON AS 00-027)
HIGH
LOW
NEUTRAL
REVERSE
5/8-11 UNC-2B-1.04 MIN. FULL THD. 4 HOLES FOR MOUNTING (BOTH SIDES)
FLANGE POSITION "D" (SEE CHART NO. AS 22-008)
OPTIONAL FRONT OR REAR OUTPUT CAP
3/4 N.P.T.F. 5/8 SQUARE HEAD DRAIN PLUG
OPTIONAL 10 X 1 1/2 PARKING BRAKE
REQUIRED TO REMOVE OIL STRAINER SCREEN
BRAKE APPLY ARM
(SEE CHART NO. AS 22-008)
1/8 N.P.T.F. PROVISION FOR FORWARD CLUTCH PRESSURE TAP TAP PRESSURE 130-195 P.S.I.
STEER PUMP MOUNTING FLANGE LOCATION FOR CLEARANCE PROVISION SEE DWG AS 22-028 FOR MOUNTING DATA SEE DWG AS 22-031
REQUIRED TO REMOVE BREATHER
INPUT
APPROX. POSITION AT FULL LINING WEAR
APPROXIMATE BRAKE APPLIED POSITION 1500 LBS. MAX. PERMISSIBLE LEVER PULL
AS 22-005
BRAKE OFF POSITION
6" APPROX
NAME PLATE
ENGINE MOUNTED ESTIMATED C.G.
MODEL | DIM "A" | DIM "B"
2221 | 1.86 | 2.92
2421 | 1.86 | 2.72
REFERENCE DRAWINGS FOR OPTIONS AND SPECIFICATIONS
AS 00-016 FLEX PLATE INPUT DRIVE DATA
AS 22-004 EX. HYDRAULIC CIRCUIT REQMTS.
AS 22-008 DRIVE FLANGE OPTION
AS 00-028 INCHING CONTROL VALVE BODY
AS 00-027 AIR ACTUATED CLUTCH CUT-OFF OPTION
AS 00-007 PHYSICAL ADAPTATION CHART
AS 22-015 SPEEDOMETER DRIVE OPTION
AS 00-026 SHIFT TOWER GATING PATTERNS
AS 22-025 TURBINE PTO
AS 22-028 IMPLEMENT & STEER PUMP CLEARANCE
AS 22-030 IMPLEMENT PUMP MTG FLG & SPLINE INFO
AS 22-031 STEER PUMP MTG FLANGE & SPLINE INFO
AS 22-026 CONVERTER DRIVEN PTO & SERVICE BRAKE
AS 00-045 OFF-HIGHWAY TRANSMISSION GAUGES
AS 22-017 TWO SPEED FWD-TWO SPEED REV
AS 00-051 COOLER OIL FLOW DATA
AS 00-052 NEUTRAL START SWITCH PROVISION
.826:1 T2 | 1.21:1 T2
TRANSFER RATIO | TRANSFER RATIO
.846:1 | .685:1 | .846:1 | .685:1
LO | 2.66:1 | 2.16:1 | 3.9 :1 | 3.16:1
OPT. LO | 2.02:1 | 1.65:1 | 2.97:1 | 2.40:1
HI | .70:1 | .57:1 | 1.02:1 | .83:1
REV | 1.96:1 | 1.59:1 | 2.88:1 | 2.33:1
Allison Transmission Division
BASIC INSTALLATION DRAWING
MOD. TT-2000-1
AS 22-008

MILLIMETRES TO INCHES			
mm MIN/NOM	mm MAX	in. MIN/NOM	in. MAX
19.05		.750	

METRIC VALUES	EQUIVALENTS
-18°C	0°F
-40°C	-40°F
121°C	250°F
135°C	275°F
34 kPa	5 POUNDS/SQUARE INCH
69 kPa	10 POUNDS/SQUARE INCH
103 kPa	15 POUNDS/SQUARE INCH
138 kPa	20 POUNDS/SQUARE INCH
172 kPa	25 POUNDS/SQUARE INCH
276 kPa	40 POUNDS/SQUARE INCH
448 kPa	65 POUNDS/SQUARE INCH
965 kPa	140 POUNDS/SQUARE INCH
1110 kPa	160 POUNDS/SQUARE INCH
1310 kPa	190 POUNDS/SQUARE INCH
1344 kPa	195 POUNDS/SQUARE INCH
1.6 LITRE/S	26 GALLONS/MINUTE
2.0 LITRE/S	32 GALLONS/MINUTE

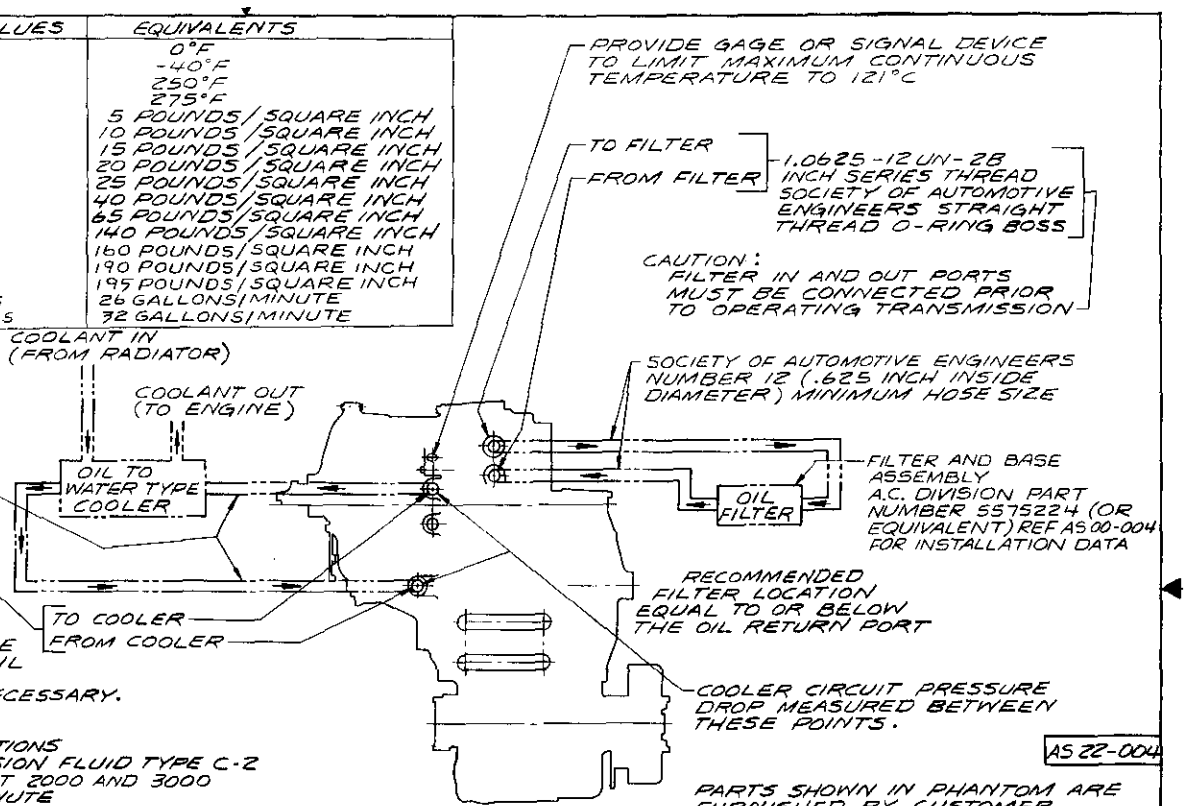

COOLER CIRCUIT PRESSURE SPECIFICATIONS:
1. AT OPERATING TEMPERATURE AND MAXIMUM SPEED IN TRAVEL GEAR – MAXIMUM ALLOWABLE CONVERTER OUT OIL PRESSURE 448 kPa (4.57 Kg/cm²) MAXIMUM ALLOWABLE EXTERNAL CIRCUIT PRESSURE DROP 276 kPa (2.81 Kg/cm²)
2. AT OPERATING TEMPERATURE AND FULL THROTTLE STALL, MINIMUM ALLOWABLE CONVERTER OUT OIL PRESSURE 276 kPa CUSTOMER TO INSTALL RESTRICTION IN COOLER RETURN LINE IF NECESSARY.

AS 22-004

REMOTE OIL FILTER – GENERAL SPECIFICATIONS

TYPE OF FLUID:	HYDRAULIC TRANSMISSION FLUID TYPE C-2
MAXIMUM OIL FLOW:	1.6 AND 2.0 LITRE/S AT 2000 AND 3000 REVOLUTIONS PER MINUTE
OPERATING OIL PRESSURE:	COLD START SURGES DEPENDENT ON FILTER AND CIRCUIT RESTRICTIONS, OIL TEMPERATURE AND ENGINE REVOLUTIONS PER MINUTE REGULATED PRESSURE AT VALVE BODY (SEE NOTE NUMBER 3)
OPERATING OIL TEMPERATURE:	121°C MAXIMUM CONTINUOUS
OIL PRESSURE DROP:	
–INITIAL (CLEAN ELEMENT)	34 kPa (0.35 Kg/cm²) MAXIMUM
–MAXIMUM PRIOR TO SERVICING	103 kPa (1.05 Kg/cm²)
BY-PASS VALVE INCORPORATED IN FILTER ASSEMBLY	
–INITIAL BY-PASS PRESSURE:	69–103 kPa (0.70–1.05 Kg/cm²)
–FULL BY-PASS PRESSURE:	138–172 kPa (1.41–1.76 Kg/cm²)
DEGREE OF FILTRATION:	44 MICRONS MAXIMUM
INTERVAL BETWEEN SERVICING:	500–1000 HOURS (DESIRABLE)
TYPE OF CONTAMINATE:	EARTH, IRON, STEEL, BRONZE, COPPER AND ALUMINUM PARTICLES, ROCK, COAL AND CEMENT DUST
METHOD OF INSTALLATION:	INDEPENDENT MOUNTED WITH 19.05 MINIMUM PIPE TAP CONNECTIONS.

REFERENCE:
1. HOSE SPECIFICATION: SOCIETY OF AUTOMOTIVE ENGINEERS 100R5 EXCEPT OPERATING TEMPERATURE RANGE FROM MINUS 40°C TO PLUS 135°C
2. FOR COOLER OIL FLOW DATA, SEE DRAWING-AS 00-051
3. TT-TRT-2000-965-1344 kPa (9.84-13.71 Kg/cm²) TT 3420-1110-1310 kPa (11.32-13.36 Kg/cm²)

METRIC
ALL DIMENSIONS ARE IN MILLIMETRES, UNLESS OTHERWISE SPECIFIED
THIRD ANGLE PROJECTION

CHANGES				
D	7-23-73	ADDED NOTES	KJS	
N	10-29-76	REV FILTER NOTE	JWH	
M	4-1-76	REVISED TO METRICS	D.W.C.	
DRAWN	HOWELL	TRACED	NIGGINS	DES. DETAILED	TEMAN
DATE	7-15-68	DATE	7-16-68	DATE	7-16-68
SCALE	NONE	CHECKED	MUELLER	APPROVED	SCHWAN
		DATE	7-22-68	DATE	7-22-68

Allison Transmissions

TITLE: EXTERNAL HYDRAULIC CIRCUIT REQUIREMENTS
MODEL TT-TRT-2000 AND TT-3000 | AS 22-004
Detroit Diesel Allison Division of General Motors · Indianapolis, Indiana

FORM 8202-S

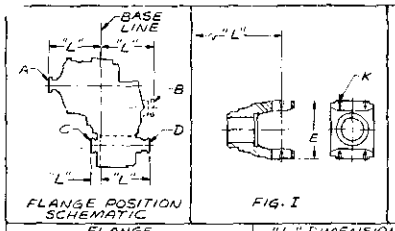

FLANGE POSITION SCHEMATIC

FIG. I

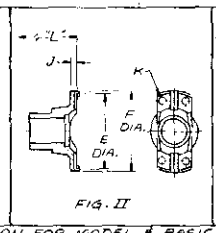

FIG. II

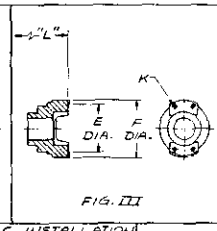

FIG. III

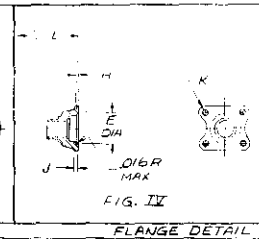

FIG. IV

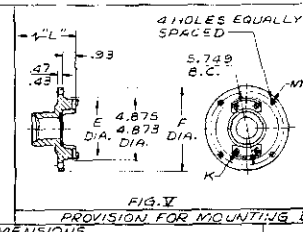

FIG. V

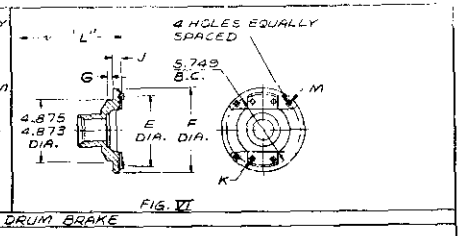

FIG. VI

PROVISION FOR MOUNTING DRUM BRAKE

POSITION	TYPE	SIZE	FIG. NO.	PART NO.	DETAIL NO.	"L" DIMENSION FOR MODEL & BASIC INSTALLATION: TT-2221 AS 22-007	TRT-2221 AS 22-016	TT-2221 AS 22-027	TRT-2211 AS 22-021	T&TRT-2400 ALL MODELS	TT-3420 AS 32-001	E	F	G	H	J	K FOR DRIVE LINE MOUNTING	M FOR PARKING BRAKE DRUM MOUNTING	N
A																			
A																			
A	MECH.	5C	III	6773554	6772554	15.87	15.87	15.87	15.87	—	—	4.530 4.535	4.86 4.80				24 THD. - .66 DEEP MIN - 4 HOLES		
A																			
A	MECH.	5C	IX	6880644	6880646	17.35	17.35	17.35	17.35	—	—	4.532 4.530	6.36 6.34	5.40 5.38			3/8-24 THD - THRU 4 HOLES		
A	MECH.	6C	II	6771850	6771852	—	—	—	—	17.05	—	5.530 5.532	5.86 5.80			.46 .42	.396 .416 DIA. - THRU 4 HOLES		
A	MECH.	6C	II	6771855	6771853	—	—	—	—	17.05	—	5.530 5.532	5.86 5.80			.46 .42	7/16-24 THD. - THRU 4 HOLES		
A	MECH.	6C	IX	6880640	6880642	—	—	—	—	18.16	—	5.532 5.530	6.36 6.34	5.54 5.52			3/8-24 THD. - THRU 4 HOLES		
A																			
A	MECH.	7C	IX	6882138	6882141	—	—	—	—	—	20.42	5.842 5.844	7.21 7.19	5.77 5.81			1/2-20 THD. - .85 DEEP MIN. 4 HOLES		
A	MECH.	6C	III	6776421	6776421	15.87	15.87	15.87	15.87	—	—	5.532 5.530	5.86 5.80				7/16-24 THD. - .66 DEEP MIN. - 4 HOLES		
A																			
A																			

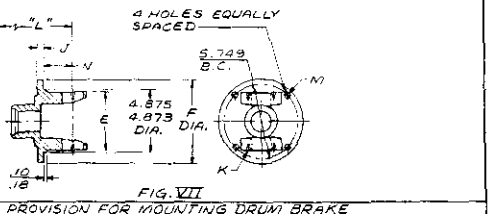

FIG. VII

PROVISION FOR MOUNTING DRUM BRAKE

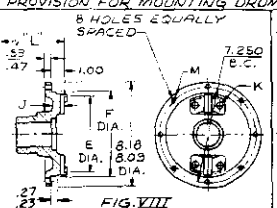

FIG. VIII

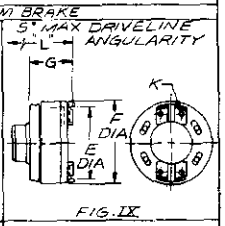

FIG. IX

PROVISION FOR MOUNTING DRUM BRAKE

TORQMATIC COUPLING

TYPE	SIZE	FIG. NO.	PART NO.	DETAIL NO.	TT-2221 & 2421 AS 22-003 POS. B	POS. C	POS. D	TRT-2220 (5&6) AS-22-010 POS. B	TRT-2211 AS 22-021 POS. B	TT-3420 AS 32-001 POS. C	POS. D	E	F	G	H	J	K FOR DRIVE LINE MOUNTING	M FOR PARKING BRAKE DRUM MOUNTING	N
MECH.	5C	III	6880093	6880093	—	2.75	15.79	—	—	—	—	4.535 4.530	4.86 4.80				24 THD. - .66 DEEP MIN. - 4 HOLES		
MECH.	5C	V	6880086	6880086	—	—	15.85	—	—	—	—	4.535 4.530	6.56 6.50				24 THD. - .66 DEEP MIN. - 4 HOLES	3/8 - 24 THD - THRU	
MECH.	6C	III	6880095	6880095	—	2.75	15.79	—	—	—	—	5.535 5.530	5.86 5.80				24 THD. - .66 DEEP MIN. - 4 HOLES		
MECH.	6C	VI	6880090	6880090	—	—	15.85	—	—	—	—	5.535 5.530	6.55 6.50	.44 .36		.715 .695	24 THD. - .66 DEEP MIN. - 4 HOLES	7/16 - 24 THD - THRU	
MECH.	7C	VIII	6773275	6773275	—	—	—	20.98	—	—	—	5.847 5.842	6.500 6.495			1.01 .84	1/2 - 20 THD. - THRU 4 HOLES	1/2 - 24 THD - THRU	
MECH.	7C	VIII	6769178	6769178	—	—	—	—	15.53	—	—	5.847 5.842	6.500 6.495			1.01 .84	1/2 - 20 THD. - THRU 4 HOLES	1/2 - 24 THD - THRU	
ROCK-WELL	4N PLAIN	I	6838292	6838292	20.24	—	—	—	—	—	—	4.064 4.062					1/4 - 28 THD. - 3/12 DEEP - 4 HOLES		
SPICER	1410	IV	6832099	6832099	18.82	—	—	—	—	—	—	3.752 3.750				.110 .100	.323 .305 .441 .439 DIA. - THRU 4 HOLES	TURBINE P.T.O.	
SPICER	1480	IV	6880096	6880096	—	2.40	15.44	—	—	—	—	3.752 3.750				.104 .094	.385 .513 .365 .505 DIA. - THRU 4 HOLES		
SPICER	1480	X	6880088	6880088	—	—	15.85	—	—	—	—	3.752 3.750	6.55 6.50			.088 .068	.715 .695	3/8 - 24 THD - THRU	
ROCK-WELL	5N PLAIN	I	6880094	6880094	—	3.61	16.65	—	—	—	—	4.560 4.550					5/16 - 24 THD. - .38 DEEP MIN. - 4 HOLES		
ROCK-WELL	5N PLAIN	VII	6880087	6880087	—	—	17.09	—	—	—	—	4.560 4.550	6.56 6.50			.52 .44	5/16 - 24 THD. - .38 DEEP MIN. - 4 HOLES	3/8 - 24 THD - THRU	2.233 2.173
ROCK-WELL	6N PLAIN	VII	6880089	6880089	—	—	17.84	—	—	—	—	5.728 5.724	6.51 6.49			.640 .620	3/8 - 24 THD. - .53 DEEP MIN. - 4 HOLES	3/8 - 24 THD. - .66 DEEP MIN.	2.09 2.01
MECH.	7C	II	6883979	6883979	—	2.75	15.79	—	—	2.75	—	5.847 5.842	6.56 6.50			.77 .75	1/2 - 20 THD - THRU 4 HOLES		
MECH.	7C	VI	6880091	6880091	—	—	16.35	—	—	—	—	5.847 5.842	6.56 6.50	.44 .36		1.973 1.193	1/2 - 20 THD. - .85 DEEP MIN. - 4 HOLES	1/2 - 24 THD - THRU	
ROCK-WELL	62N	V	6880092	6880092	—	—	17.19	—	—	—	—	5.532 5.530	6.310 6.490				7/16 - 24 THD. - .75 DEEP MIN. - 4 HOLES	7/16 - 24 THD - THRU	
MECH	7C	VIII	6881090	6881090	—	—	—	—	—	—	17.57	5.847 5.842	6.496 6.434			1.52 1.48	1/2 - 20 THD. - .85 DEEP MIN. - 4 HOLES	7/16 - 24 THD. THRU 6 HOLES ON BASIS OF 6 EQUALLY SPACED	

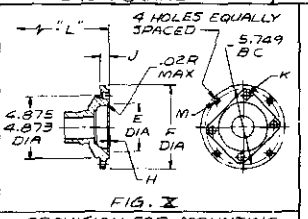

FIG. X

PROVISION FOR MOUNTING DRUM BRAKE

AS 22-008

* REQUIRES SPACER PART NUMBER 6773465 FOR "D" POSITION

SYM	ZONE	DESCRIPTION	BY	DATE
AA	T, 22-17	ADDED NOTE	TDK	2-1-71
Z	1¼	CHANGED MECH. 5C 10 DIGIT NO. AND ADDED 15.79	G. A.	10-1-70
AV	5/8	ADDED 6880092 AND 6880094 MOD.	TDK	11-1-71
AW	1¼	ADDED MODEL TT-3420 AND FLANGE 6883978	TDK	12-1-71
AU	1¼	6880644 WAS 6880642 6880646 WAS 6880640	TDK	1-1-72
T	10-9-70	ADDED 'A' DRAM PT. NOS.	TDK	10-9-70
S	5-1-70	FIG. IV & PARTS REVISED	TDK	5-1-70
R	4-28-70	SEE REV NOTICE	G. A.	4-28-70
P	2-20-70	SEE REV NOTICE	G. A.	2-20-70
N	10-2-68	SEE REV NOTICE	G. A.	10-2-68
M	8-6-68	REV. & PARAGRAPH	G. A.	8-6-68

Allison TORQMATIC Drive

TITLE: DRIVE FLANGE OPTION

MODEL TT-TRT-2000 TT-3420

AS 22-008

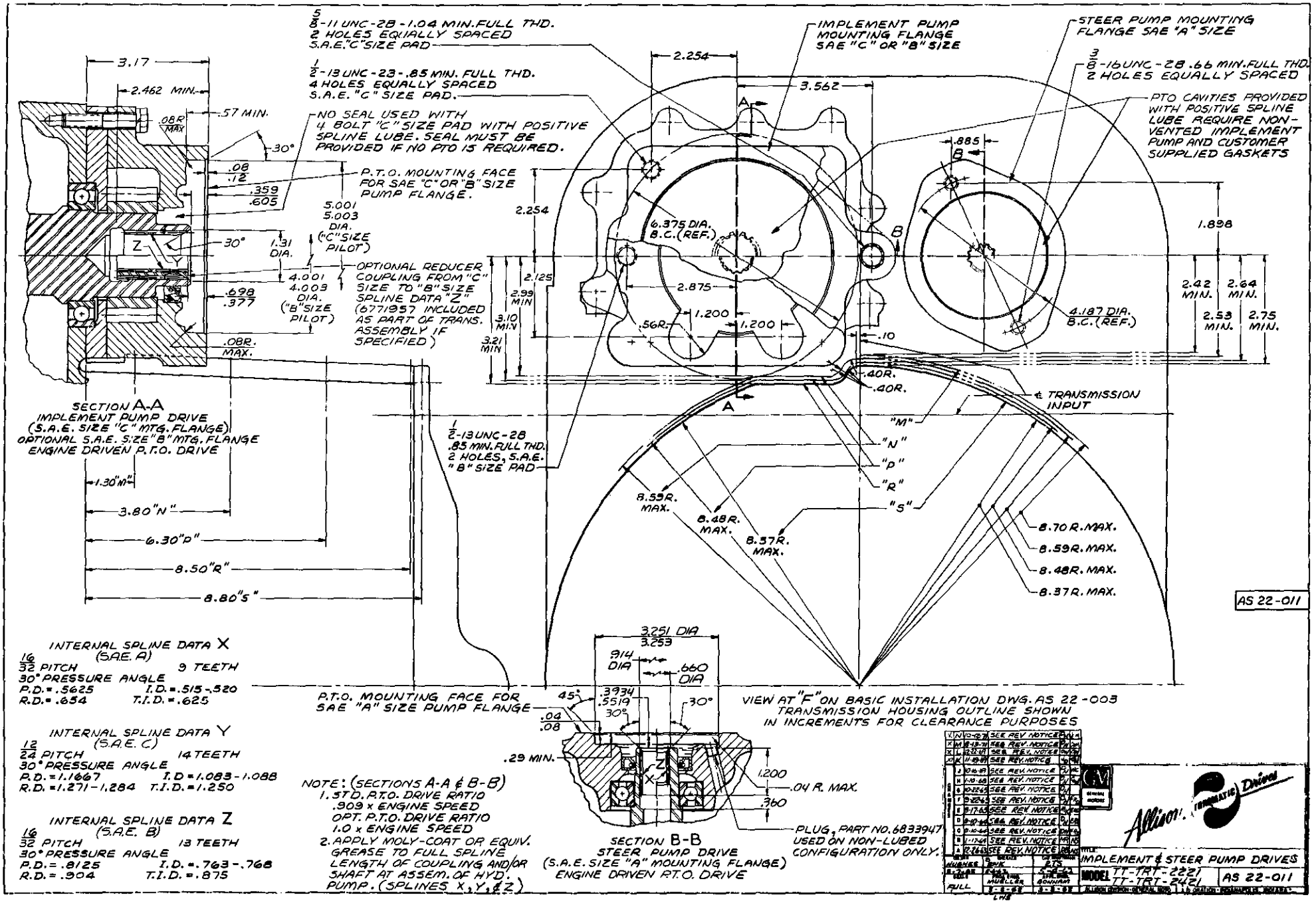

INTERNAL SPLINE DATA X
(S.A.E. A)
16/32 PITCH — 9 TEETH
30° PRESSURE ANGLE
P.D. = .5625 — I.D. = .515 - .520
R.D. = .654 — T.I.D. = .625

INTERNAL SPLINE DATA Y
(S.A.E. C)
12/24 PITCH — 14 TEETH
30° PRESSURE ANGLE
P.D. = 1.1667 — I.D. = 1.083 - 1.088
R.D. = 1.271 - 1.284 — T.I.D. = 1.250

INTERNAL SPLINE DATA Z
(S.A.E. B)
16/32 PITCH — 13 TEETH
30° PRESSURE ANGLE
P.D. = .8125 — I.D. = .763 - .768
R.D. = .904 — T.I.D. = .875

NOTE: (SECTIONS A-A & B-B)
1. STD. P.T.O. DRIVE RATIO
.909 x ENGINE SPEED
OPT. P.T.O. DRIVE RATIO
1.0 x ENGINE SPEED
2. APPLY MOLY-COAT OR EQUIV. GREASE TO FULL SPLINE LENGTH OF COUPLING AND/OR SHAFT AT ASSEM. OF HYD. PUMP. (SPLINES X, Y, & Z)

LTR	DATE	DESCRIPTION	BY
N	10-12-71	SEE REV. NOTICE	
M	8-13-71	SEE REV. NOTICE	
L	2-22-71	SEE REV. NOTICE	
K	11-19-69	SEE REV. NOTICE	
J	10-16-69	SEE REV. NOTICE	
H	7-10-68	SEE REV. NOTICE	
G	10-25-65	SEE REV. NOTICE	
F	9-22-65	SEE REV. NOTICE	
E	9-17-65	SEE REV. NOTICE	
D	2-10-64	SEE REV. NOTICE	
C	9-10-63	SEE REV. NOTICE	
B	1-1-63	SEE REV. NOTICE	
A	2-16-62	SEE REV. NOTICE	

AVIONICS — PUMP — P.T.O.
MODEL — MFG'D BY — MFG'D BY
AS22-011 — MUELLER — BONHAM
FILL — 1-1-62 — 1-1-62

Allison Automatic Drives

TITLE: IMPLEMENT & STEER PUMP DRIVES
MODEL TT-TRT-222/242 | AS 22-011

MILLIMETRES TO INCHES			
mm MIN/NOM	mm MAX	in. MIN/NOM	in. MAX
430.0		16.93	

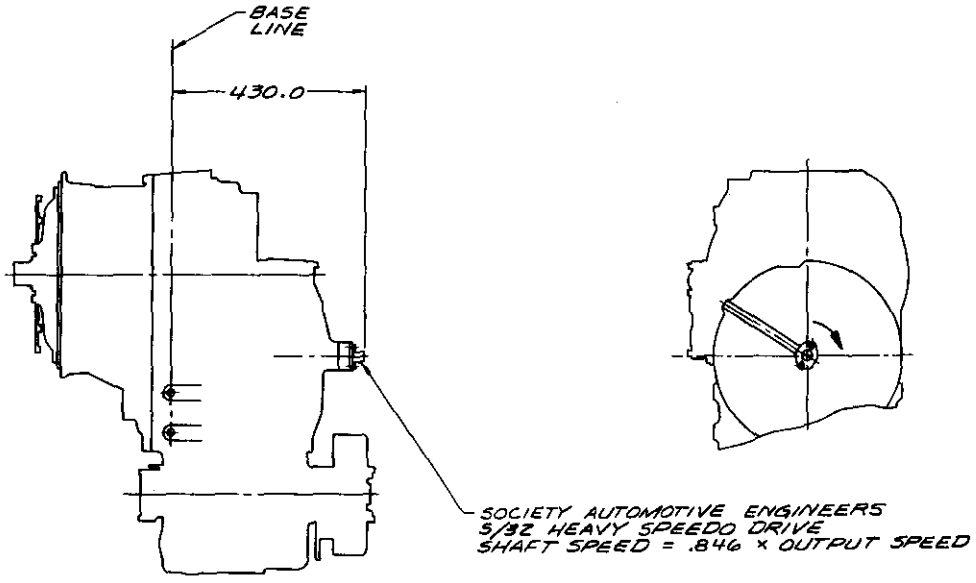

AS 22-015

FOR TRANSMISSION INSTALLATION DATA NOT SHOWN SEE BASIC INSTALLATION DRAWING

MODEL	BASIC
TT 2000	AS 22-003
TT 3000	AS 32-001

METRIC

ALL DIMENSIONS ARE IN MILLIMETRES, UNLESS OTHERWISE SPECIFIED

THIRD ANGLE PROJECTION

CHANGES

C 3-17-72 REDRAWN TO METRIC

DRAWN D. HUGHES 11-2-62 | CHECKED SWEANY 11-12-62 | CHK. DIST. RTS 11-12-62

SCALE 0.2 TIMES | PROJ. ENGR. D.F. MUELLER 11-7-62 | APPL. ENGR. E.P. WELCHER 11-7-62

Allison Transmissions

TITLE: SPEEDOMETER DRIVE OPTION

MODEL TT-2/3000 SERIES AS 22-015

Detroit Diesel Allison Division of General Motors - Indianapolis, Indiana

FORM 8302-5

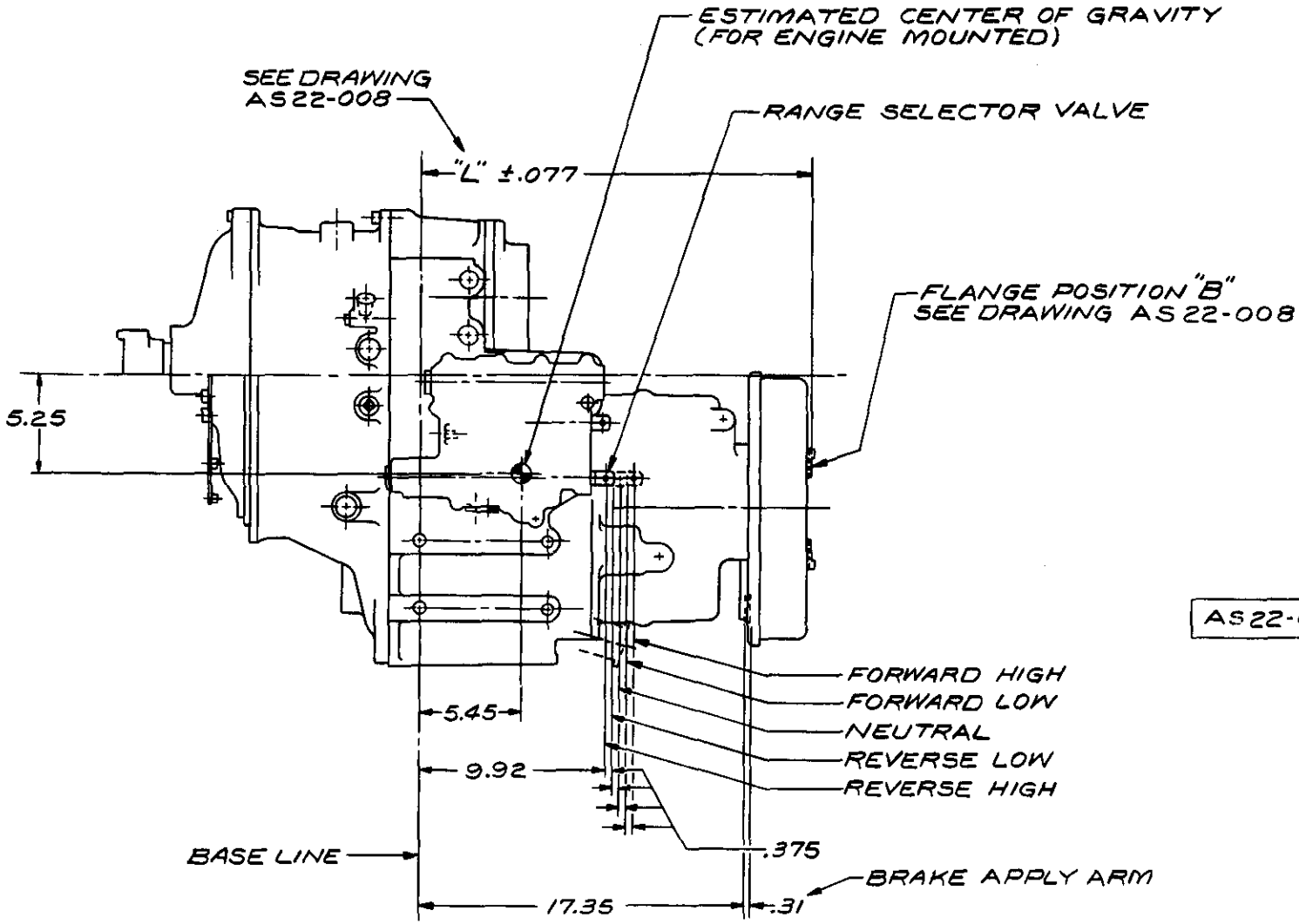

AS22-016

TRANSMISSION GEAR RATIOS		OPTIONAL RATIOS
FORWARD HIGH	2.40:1	.83:1
FORWARD LOW	6.61:1	2.40:1
REVERSE LOW	6.40:1	2.32:1
REVERSE HIGH	2.32:1	.80:1

FOR ALL TRANSMISSION INSTALLATION DATA NOT SHOWN SEE BASIC INSTALLATION DRAWING AS22-021

ESTIMATED ADDITIONAL WEIGHT = 95 LBS.

CHANGES				
J				
H				
G				
F				
E	5-24-73	REVISED VALVE BODY & MODEL NO.		
D	2-22-65	SEE CHG. NOTICE	DH	ERD
C	8-23-65	SEE CHG. NOTICE	DH	ERD
B	4-6-64	REV. & REDRAWN	JN	
A	1-16-64	SEE REV. NOTICE	VR	NS

DRAWN	DIST.	CHF. DRAFTSMAN
HUGHES 7-10-63	RLH 10-25-63	RTS 10-28-63
SCALE 1/4 SIZE	PROJ. MUELLER 10-24-63	APPL. ENGR. WELCHER 10-24-63

GM GENERAL MOTORS

Allison TORQMATIC Drives

TITLE TWO SPEED FWD.-TWO SPEED REV.

MODEL TRT-2000-3 AS22-016

ALLISON DIVISION-GENERAL MOTORS CORPORATION · INDIANAPOLIS, INDIANA

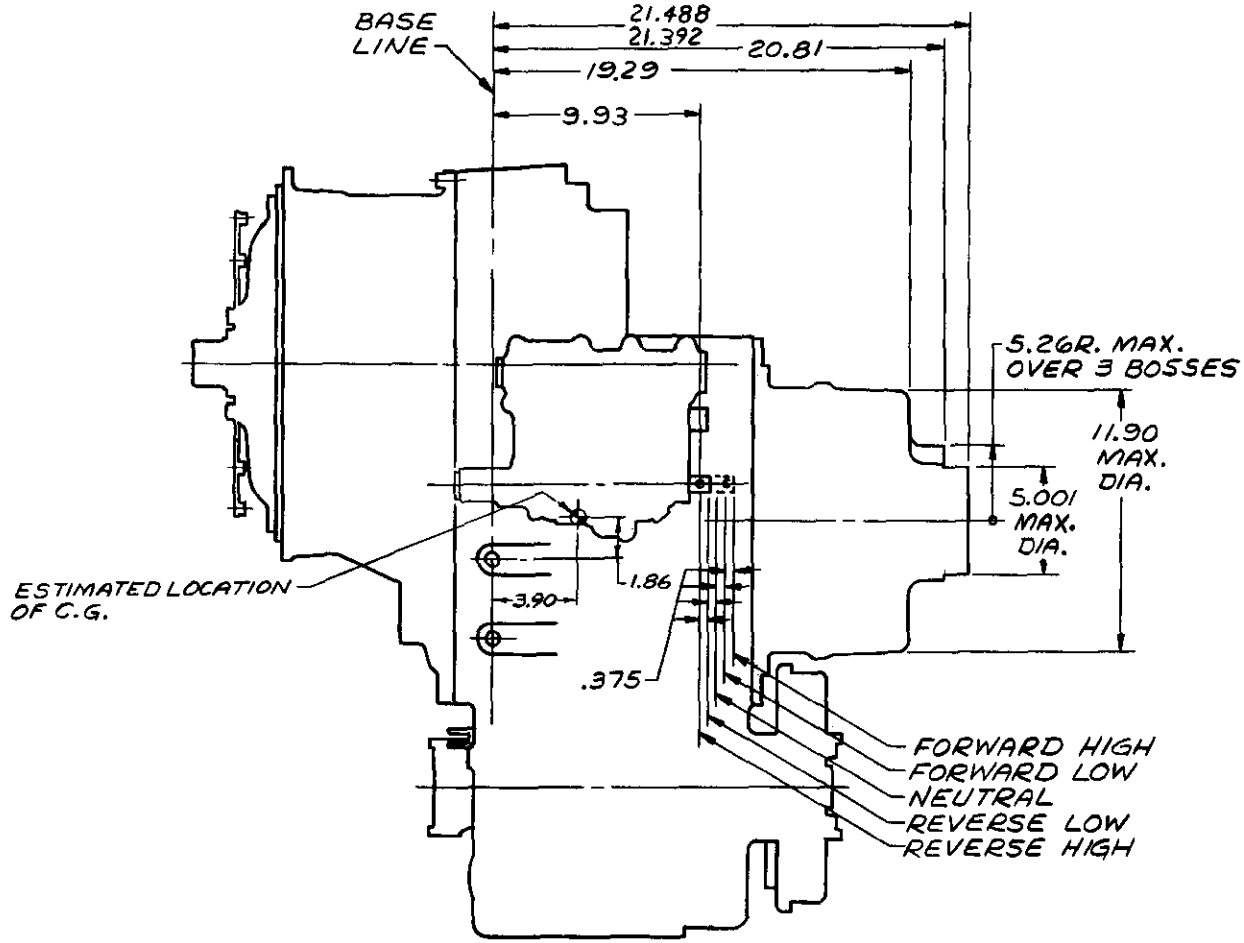

AS 22-017

FOR ALL OTHER TRANSMISSION INSTALLATION DATA SEE BASIC INSTALLATION DRAWING AS 22-003

ESTIMATE 150 LBS. ADDITIONAL WEIGHT

TRANSMISSION GEAR RATIOS	
FORWARD LOW	2.03:1
FORWARD HIGH	.737:1
REVERSE LOW	1.964:1
REVERSE HIGH	.713:1

CHANGES				
J				
H				
G				
F				
E				
D				
C				
B	5-24-73	REVISED VALVE BODY & MODEL NO.	DM	HEB
A	2-18-65	ADD MODEL	DH	ERD

GM GENERAL MOTORS

Allison TORQMATIC Drives

DRAWN	CHECKED	CHF. DRAFTSMAN
HUGHES 3-8-63	HARPER 6-29-64	RTS 6-29-64
SCALE 1/4 X SIZE	PROJ. ENGR. D.F. MUELLER 3-8-63	APPL. ENGR. E.P. WELCHER 3-8-63

TITLE TWO SPEED FWD.-TWO SPEED REV.

MODEL TRT-2000-1 AS 22-017

ALLISON DIVISION · GENERAL MOTORS CORPORATION · INDIANAPOLIS, INDIANA

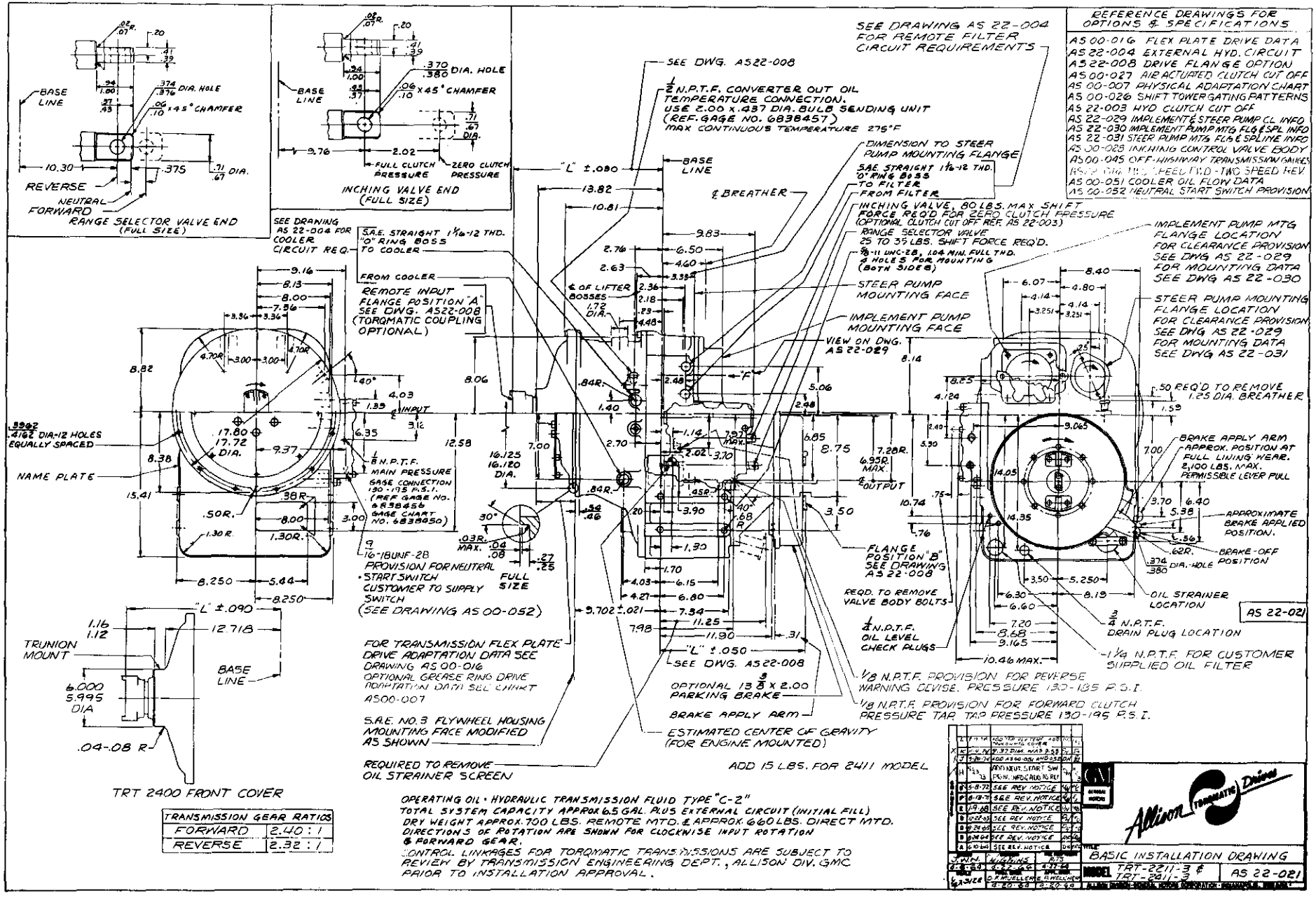
REFERENCE DRAWINGS FOR OPTIONS & SPECIFICATIONS
AS 00-016 FLEX PLATE DRIVE DATA
AS 22-004 EXTERNAL HYD. CIRCUIT
AS 22-008 DRIVE FLANGE OPTION
AS 00-027 AIR ACTUATED CLUTCH CUT OFF
AS 00-007 PHYSICAL ADAPTATION CHART
AS 00-026 SHIFT TOWER GATING PATTERNS
AS 22-003 HYD CLUTCH CUT OFF
AS 22-029 IMPLEMENT & STEER PUMP CL INFO
AS 22-030 IMPLEMENT PUMP MTG FLG & SPL INFO
AS 22-031 STEER PUMP MTG FLG & SPLINE INFO
AS 00-028 INCHING CONTROL VALVE BODY
AS 00-045 OFF-HIGHWAY TRANSMISSION GAUGES
AS 00-051 COOLER OIL FLOW DATA
AS 00-052 NEUTRAL START SWITCH PROVISION
SEE DRAWING AS 22-004 FOR REMOTE FILTER CIRCUIT REQUIREMENTS
SEE DWG. AS22-008
3/4 N.P.T.F. CONVERTER OUT OIL TEMPERATURE CONNECTION. USE 2.00 x .437 DIA. BULB SENDING UNIT (REF. GAGE NO. 6838457) MAX CONTINUOUS TEMPERATURE 275°F
DIMENSION TO STEER PUMP MOUNTING FLANGE
SAE STRAIGHT 1 1/16-12 THD. "O" RING BOSS TO FILTER
FROM FILTER
BASE LINE
℄ BREATHER
INCHING VALVE, 80 LBS. MAX SHIFT FORCE REQ'D FOR ZERO CLUTCH PRESSURE (OPTIONAL CLUTCH CUT OFF REF. AS 22-003)
RANGE SELECTOR VALVE 25 TO 35 LBS. SHIFT FORCE REQ'D.
5/8-11 UNC-2B, 1.04 MIN. FULL THD. 8 HOLES FOR MOUNTING (BOTH SIDES)
STEER PUMP MOUNTING FACE
IMPLEMENT PUMP MOUNTING FACE
VIEW ON DWG. AS 22-029
IMPLEMENT PUMP MTG FLANGE LOCATION FOR CLEARANCE PROVISION SEE DWG AS 22-029 FOR MOUNTING DATA SEE DWG AS 22-030
STEER PUMP MOUNTING FLANGE LOCATION FOR CLEARANCE PROVISION SEE DWG AS 22-029 FOR MOUNTING DATA SEE DWG AS 22-031
.50 REQ'D TO REMOVE 1.25 DIA. BREATHER
SEE DRAWING AS 22-004 FOR COOLER CIRCUIT REQ.
S.A.E. STRAIGHT 1 1/16-12 THD. "O" RING BOSS TO COOLER
FROM COOLER
REMOTE INPUT FLANGE POSITION "A" SEE DWG. AS22-008 (TORQMATIC COUPLING OPTIONAL)
INPUT
OUTPUT
.5942 .4162 DIA-12 HOLES EQUALLY SPACED
NAME PLATE
3/8 N.P.T.F. MAIN PRESSURE GAGE CONNECTION 130-195 P.S.I. (REF GAGE No. 6838456 GAGE CHART NO. 6838450)
9/16-18UNF-2B PROVISION FOR NEUTRAL START SWITCH CUSTOMER TO SUPPLY SWITCH (SEE DRAWING AS 00-052)
FULL SIZE
FLANGE POSITION "B" SEE DRAWING AS 22-008
REQ'D. TO REMOVE VALVE BODY BOLTS
1/4 N.P.T.F. OIL LEVEL CHECK PLUGS
BRAKE APPLY ARM APPROX. POSITION AT FULL LINING WEAR. 2,100 LBS. MAX. PERMISSIBLE LEVER PULL
APPROXIMATE BRAKE APPLIED POSITION.
BRAKE-OFF POSITION
.374 .380 DIA. HOLE
OIL STRAINER LOCATION
3/4 N.P.T.F. DRAIN PLUG LOCATION
1 1/4 N.P.T.F. FOR CUSTOMER SUPPLIED OIL FILTER
AS 22-021
1/8 N.P.T.F. PROVISION FOR REVERSE WARNING DEVISE. PRESSURE 130-185 P.S.I.
1/8 N.P.T.F. PROVISION FOR FORWARD CLUTCH PRESSURE TAP. TAP PRESSURE 130-195 P.S.I.
FOR TRANSMISSION FLEX PLATE DRIVE ADAPTATION DATA SEE DRAWING AS 00-016 OPTIONAL GREASE RING DRIVE ADAPTATION DATA SEE CHART AS00-007
S.A.E. NO. 3 FLYWHEEL HOUSING MOUNTING FACE MODIFIED AS SHOWN
REQUIRED TO REMOVE OIL STRAINER SCREEN
OPTIONAL 13 3/8 X 2.00 PARKING BRAKE
BRAKE APPLY ARM
ESTIMATED CENTER OF GRAVITY (FOR ENGINE MOUNTED)
ADD 15 LBS. FOR 2411 MODEL
"L" ±.090
"L" ±.050
SEE DWG. AS22-008
TRUNION MOUNT
BASE LINE
6.000 5.995 DIA
.04-.08 R
TRT 2400 FRONT COVER
RANGE SELECTOR VALVE END (FULL SIZE)
INCHING VALVE END (FULL SIZE)
FULL CLUTCH PRESSURE
ZERO CLUTCH PRESSURE
NEUTRAL
FORWARD
REVERSE
BASE LINE
.06 x 45° CHAMFER
.374 .376 DIA. HOLE
.71 .67 DIA.
10.30
9.76
2.02
.375
TRANSMISSION GEAR RATIOS
FORWARD 2.40 : 1
REVERSE 2.32 : 1
OPERATING OIL - HYDRAULIC TRANSMISSION FLUID TYPE "C-2"
TOTAL SYSTEM CAPACITY APPROX 6.5 GAL. PLUS EXTERNAL CIRCUIT (INITIAL FILL)
DRY WEIGHT APPROX. 700 LBS. REMOTE MTD. & APPROX. 660 LBS. DIRECT MTD.
DIRECTIONS OF ROTATION ARE SHOWN FOR CLOCKWISE INPUT ROTATION & FORWARD GEAR.
CONTROL LINKAGES FOR TORQMATIC TRANSMISSIONS ARE SUBJECT TO REVIEW BY TRANSMISSION ENGINEERING DEPT., ALLISON DIV. GMC PRIOR TO INSTALLATION APPROVAL.
Allison TORQMATIC Drives
BASIC INSTALLATION DRAWING
MODEL TRT-2211-3 & TRT-2411-3
AS 22-021

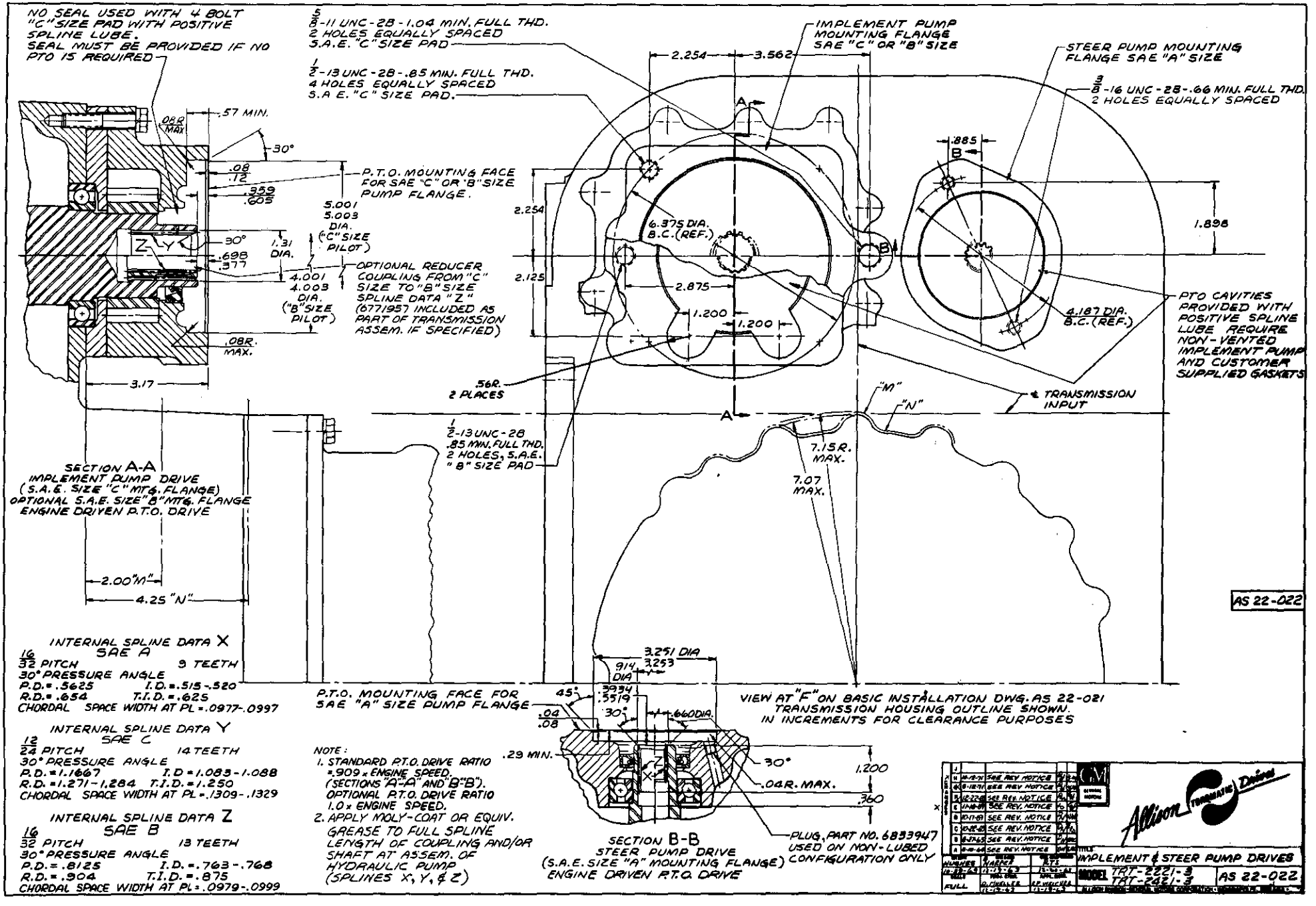
NO SEAL USED WITH 4 BOLT "C" SIZE PAD WITH POSITIVE SPLINE LUBE. SEAL MUST BE PROVIDED IF NO PTO IS REQUIRED
5/8-11 UNC-2B-1.04 MIN. FULL THD. 2 HOLES EQUALLY SPACED S.A.E. "C" SIZE PAD
1/2-13 UNC-2B-.85 MIN. FULL THD. 4 HOLES EQUALLY SPACED S.A.E. "C" SIZE PAD.
IMPLEMENT PUMP MOUNTING FLANGE SAE "C" OR "B" SIZE
STEER PUMP MOUNTING FLANGE SAE "A" SIZE
3/8-16 UNC-2B-.66 MIN. FULL THD. 2 HOLES EQUALLY SPACED
.57 MIN.
.08R MAX
30°
.08
.12
.359
.605
P.T.O. MOUNTING FACE FOR SAE "C" OR "B" SIZE PUMP FLANGE.
5.001
5.003 DIA. ("C" SIZE PILOT)
1.31 DIA.
.698
.377
4.001
4.003 DIA. ("B" SIZE PILOT)
OPTIONAL REDUCER COUPLING FROM "C" SIZE TO "B" SIZE SPLINE DATA "Z" (6771957 INCLUDED AS PART OF TRANSMISSION ASSEM. IF SPECIFIED)
.08R. MAX.
3.17
2.254
3.562
.885
1.898
6.375 DIA. B.C. (REF.)
2.875
1.200
1.200
2.125
4.187 DIA. B.C. (REF.)
PTO CAVITIES PROVIDED WITH POSITIVE SPLINE LUBE REQUIRE NON-VENTED IMPLEMENT PUMP AND CUSTOMER SUPPLIED GASKETS
.56R. 2 PLACES
℄ TRANSMISSION INPUT
"M"
"N"
1/2-13 UNC-2B .85 MIN. FULL THD. 2 HOLES, S.A.E. "B" SIZE PAD
7.15R. MAX.
7.07 MAX.
SECTION A-A
IMPLEMENT PUMP DRIVE (S.A.E. SIZE "C" MTG. FLANGE)
OPTIONAL S.A.E. SIZE "B" MTG. FLANGE
ENGINE DRIVEN P.T.O. DRIVE
2.00 "M"
4.25 "N"
AS 22-022
INTERNAL SPLINE DATA X
SAE A
16/32 PITCH 9 TEETH
30° PRESSURE ANGLE
P.D. = .5625 I.D. = .515-.520
R.D. = .654 T.I.D. = .625
CHORDAL SPACE WIDTH AT PL = .0977-.0997
INTERNAL SPLINE DATA Y
SAE C
12/24 PITCH 14 TEETH
30° PRESSURE ANGLE
P.D. = 1.1667 I.D = 1.083-1.088
R.D. = 1.271-1.284 T.I.D. = 1.250
CHORDAL SPACE WIDTH AT PL = .1309-.1329
INTERNAL SPLINE DATA Z
SAE B
16/32 PITCH 13 TEETH
30° PRESSURE ANGLE
P.D. = .8125 I.D. = .763-.768
R.D. = .904 T.I.D. = .875
CHORDAL SPACE WIDTH AT PL = .0979-.0999
P.T.O. MOUNTING FACE FOR SAE "A" SIZE PUMP FLANGE
3.251 DIA
.914 DIA
3.253
45°
.3934
.5519
30°
.04
.08
.660 DIA.
.29 MIN.
30°
.04R. MAX.
1.200
.360
VIEW AT "F" ON BASIC INSTALLATION DWG. AS 22-021 TRANSMISSION HOUSING OUTLINE SHOWN. IN INCREMENTS FOR CLEARANCE PURPOSES
NOTE:
1. STANDARD P.T.O. DRIVE RATIO = .909 x ENGINE SPEED. (SECTIONS "A"-"A" AND "B"-"B"). OPTIONAL P.T.O. DRIVE RATIO 1.0 x ENGINE SPEED.
2. APPLY MOLY-COAT OR EQUIV. GREASE TO FULL SPLINE LENGTH OF COUPLING AND/OR SHAFT AT ASSEM. OF HYDRAULIC PUMP (SPLINES X, Y, & Z)
SECTION B-B
STEER PUMP DRIVE (S.A.E. SIZE "A" MOUNTING FLANGE)
ENGINE DRIVEN P.T.O. DRIVE
PLUG, PART NO. 6833947 USED ON NON-LUBED CONFIGURATION ONLY
SEE REV. NOTICE
SEE REV. NOTICE
SEE REV. NOTICE
SEE REV. NOTICE
SEE REV. NOTICE
SEE REV. NOTICE
SEE REV. NOTICE
Allison Torquatic Drives
IMPLEMENT & STEER PUMP DRIVES
MODEL TRT-2221-3 TRT-2421-3
AS 22-022
FULL

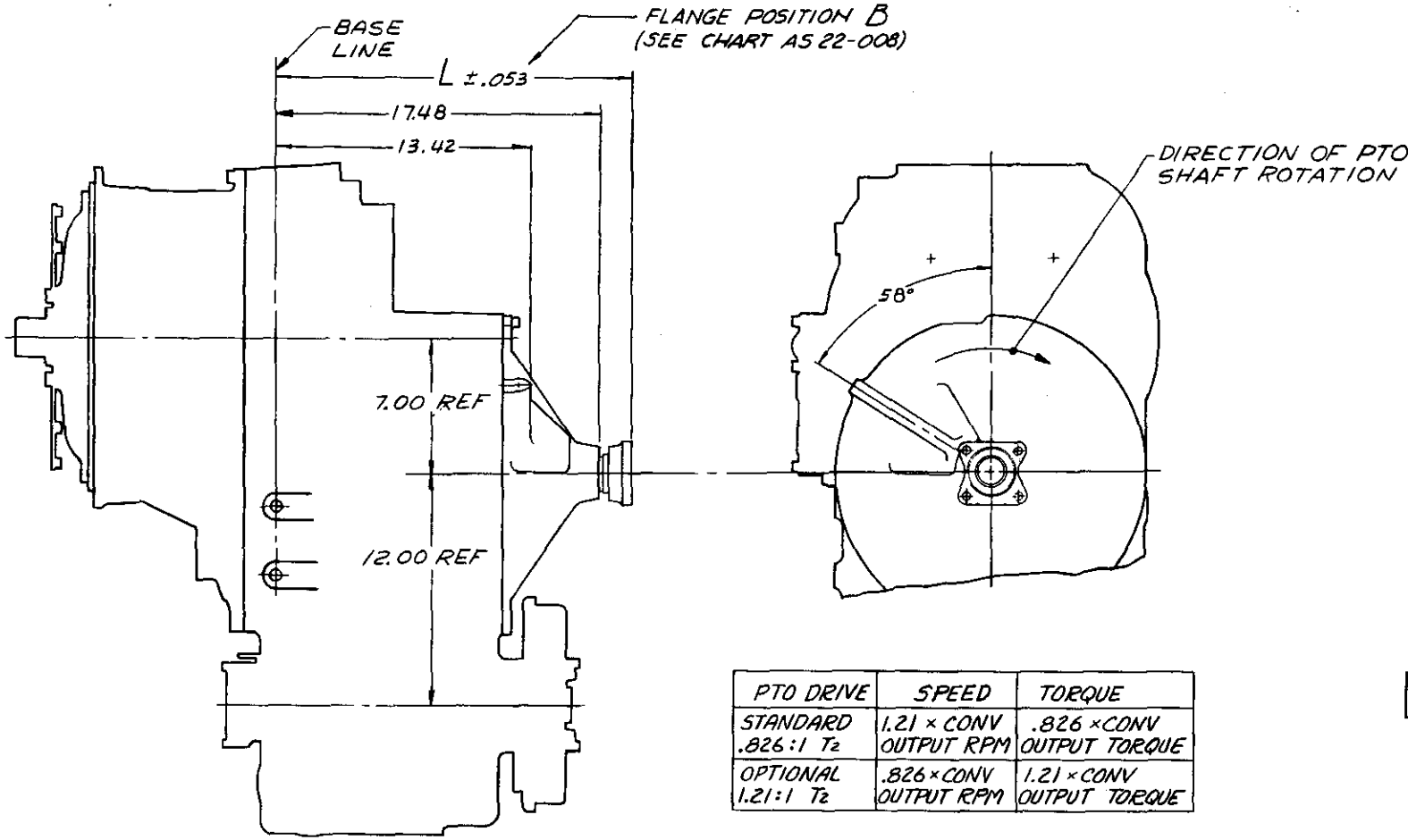

PTO DRIVE	SPEED	TORQUE
STANDARD .826:1 T_2	1.21 × CONV OUTPUT RPM	.826 × CONV OUTPUT TORQUE
OPTIONAL 1.21:1 T_2	.826 × CONV OUTPUT RPM	1.21 × CONV OUTPUT TORQUE

AS 22-025

FOR ALL TRANSMISSION INSTALLATION DATA NOT SHOWN
SEE BASIC INSTALLATION DRAWING
AS 22-003

ESTIMATED WEIGHT-CONVERTER DRIVEN PTO-ADD 45 LBS

CHANGES				
J				
H				
G				
F				
E				
D				
C				
B	10-12-67	SEE REV NOTICE	JG	
A	9-1-66	SEE REV. NOTICE	AM	

DRAWN	CHECKED	CHK. DRAFTSMAN
Hughes 7-6-65	Moyer 7-16-65	Betson 7-16-65
SCALE	PROJ. ENGR.	APPL. ENGR.
1/4 x SIZE	Robinson 7-12-65	EPW 7-13-65

GM GENERAL MOTORS

Allison Torqmatic Drives

TITLE: CONVERTER DRIVEN PTO OPTION

MODEL TT-2000-1 AS 22-025

ALLISON DIVISION-GENERAL MOTORS CORPORATION • INDIANAPOLIS, INDIANA •

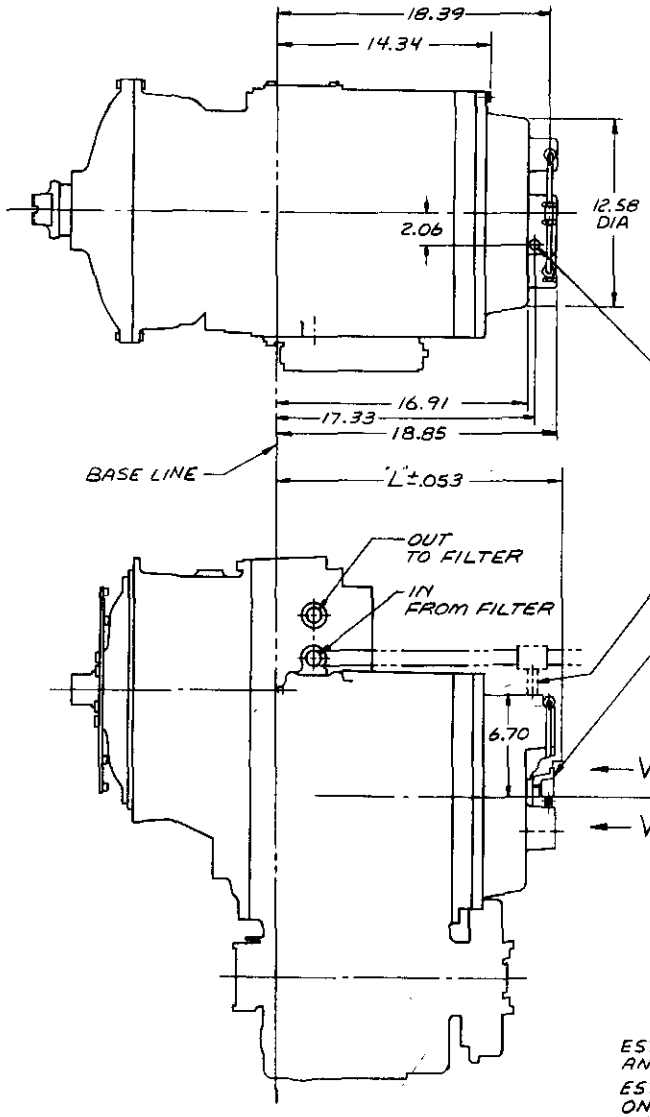

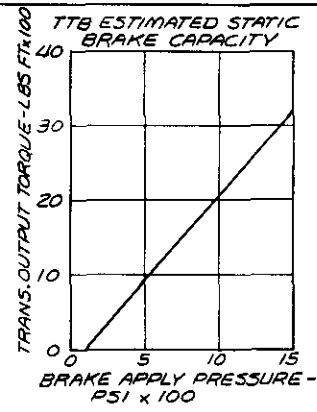

.375 NPTF FOR CUSTOMER SUPPLIED LINE FROM TEE IN FILTER RETURN LINE

#8 MIN. HOSE SIZE (S.A.E. NO. 1/2 I.D.)

FLANGE POSITION "B" SEE CHART AS 22-008

PTO DRIVE	SPEED	TORQUE
STANDARD .826:1 T_2	1.21 x CONV. OUTPUT RPM	.826 x CONV. OUTPUT TORQ.
OPTIONAL 1.21:1 T_2	.826 x CONV. OUTPUT RPM	1.21 x CONV. OUTPUT TORQ.

INVERTED 84° FLARE $\frac{7}{16}$-24 UNS TAP CONNECTION FOR $\frac{1}{2}$ O.D. TUBE FROM MASTER CYLINDER OF HYDRAULIC SERVICE BRAKE.
INITIAL FILL VOLUME REQUIREMENT TO FULL BRAKE APPLY = 3.1 CUBIC INCHES EXCLUDING EXTERNAL CIRCUIT.
STROKE REQUIREMENT VOLUME FROM BRAKE RELEASE TO FULL APPLY AFTER INITIAL FILL - .5 CUBIC INCHES MAX.
MAXIMUM PERMISSIBLE BRAKE APPLY PRESSURE 1500 P.S.I. (CONNECTION TO EITHER SIDE OPTIONAL, AIR BLEED ON OPPOSITE SIDE)

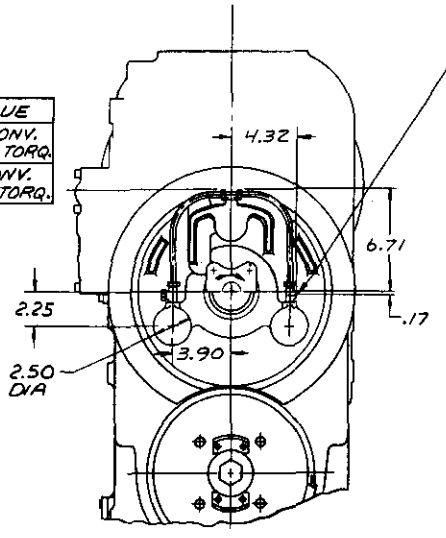

AS22-026

ESTIMATED WEIGHT-SERVICE BRAKE AND CONVERTER DRIVEN P.T.O. ADD 185 LBS.
ESTIMATED WEIGHT- SERVICE BRAKE ONLY ADD 175 LBS.

FOR INSTALLATION DATA NOT SHOWN SEE BASIC INSTALLATION DRAWING AS22-003

GM
Allison TORQMATIC® Drive

TITLE CONVERTER DRIVEN PTO AND SERVICE BRAKE OPTION

MODEL TT8-2220, 2420-1 | AS22-026

ALLISON DIVISION - GENERAL MOTORS CORPORATION - INDIANAPOLIS, INDIANA

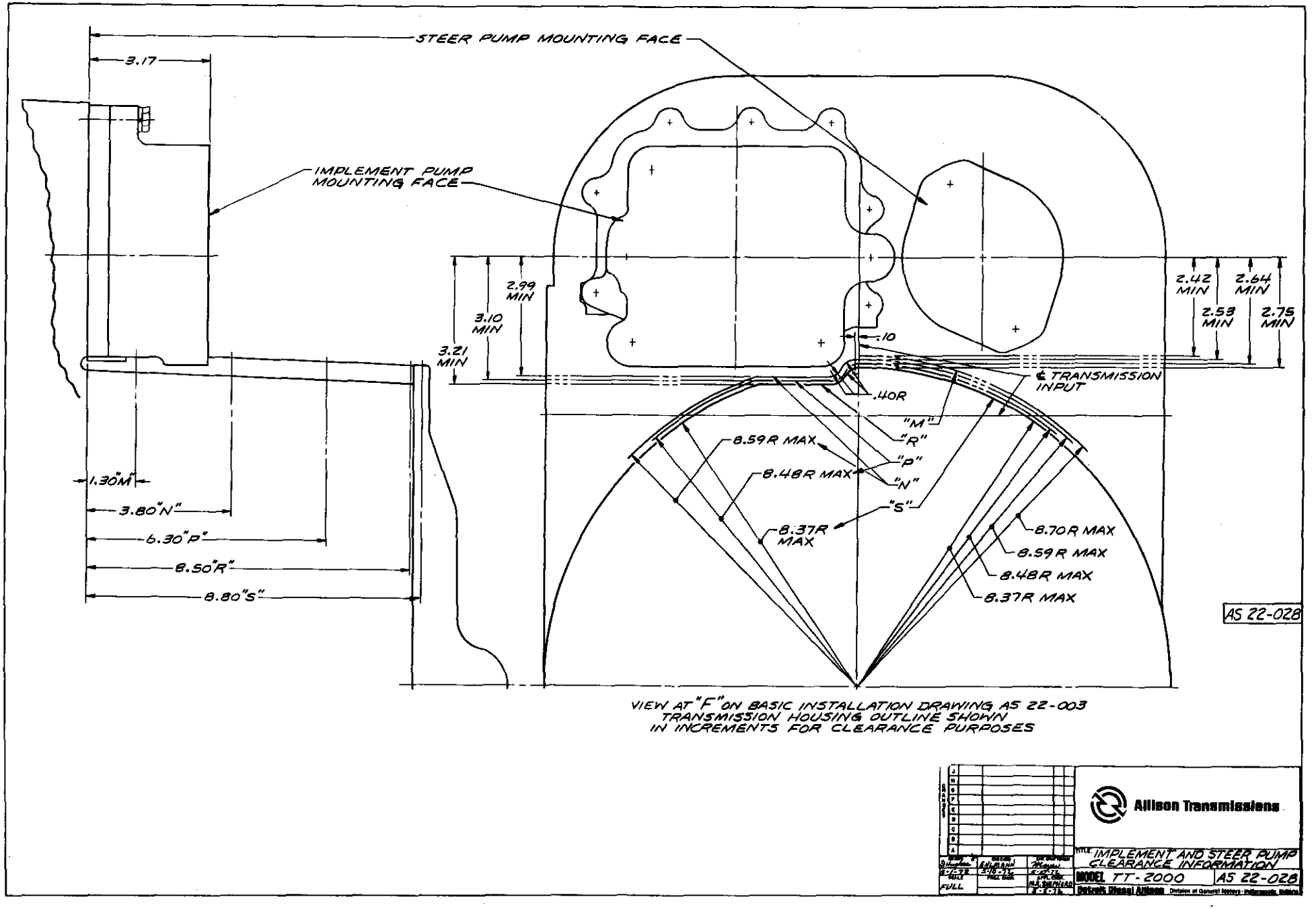

VIEW AT "F" ON BASIC INSTALLATION DRAWING AS 22-003
TRANSMISSION HOUSING OUTLINE SHOWN
IN INCREMENTS FOR CLEARANCE PURPOSES

Allison Transmissions

TITLE: IMPLEMENT AND STEER PUMP CLEARANCE INFORMATION

MODEL TT-2000 | AS 22-028

Detroit Diesel Allison Division of General Motors - Indianapolis, Indiana

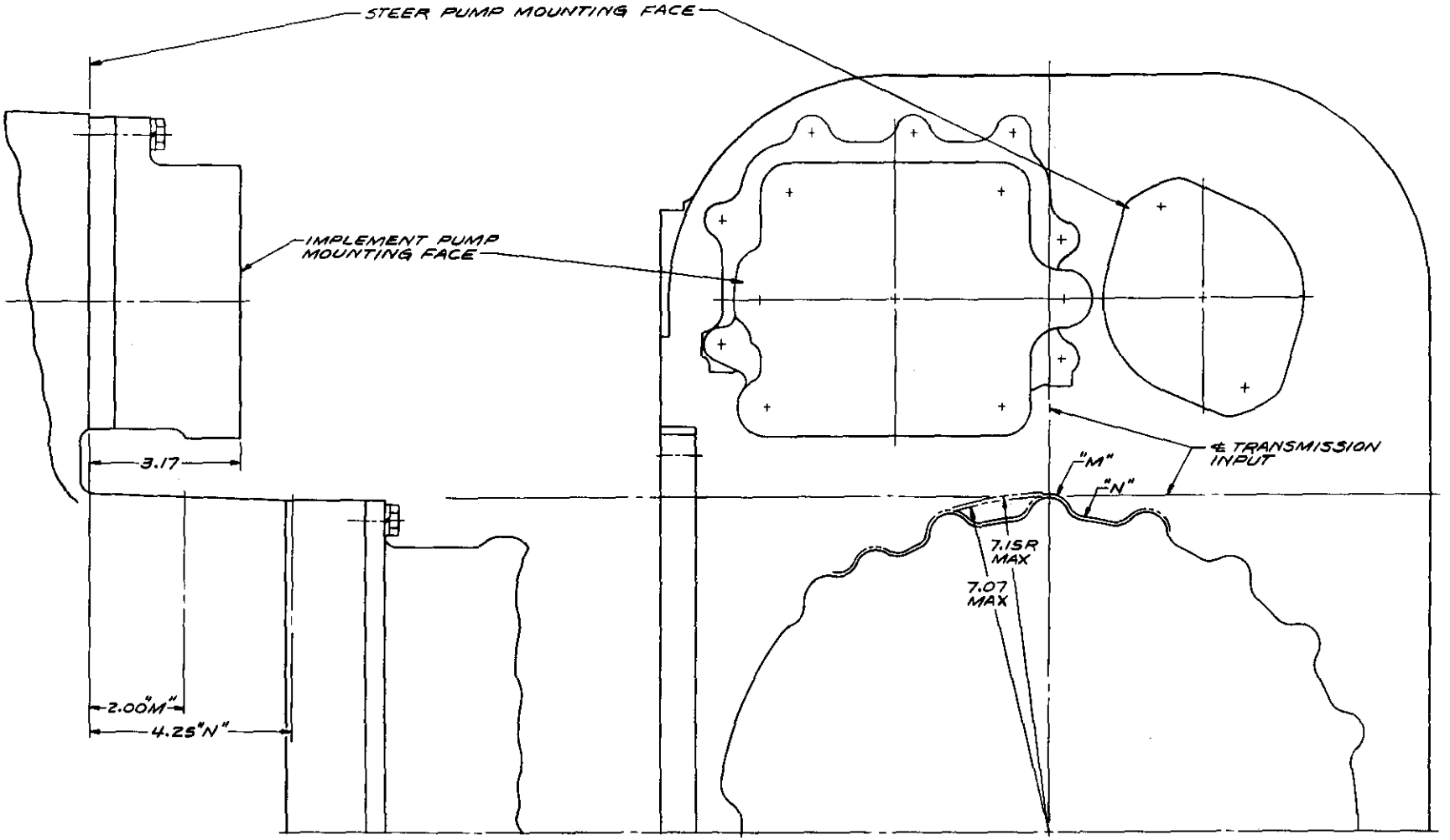

AS 22-029

VIEW AT "F" ON BASIC INSTALLATION DRAWING AS 22-021
TRANSMISSION HOUSING OUTLINE SHOWN
IN INCREMENTS FOR CLEARANCE PURPOSES

Allison Transmissions

TITLE IMPLEMENT AND STEER PUMP CLEARANCE INFORMATION

MODEL TT-2000 AS 22-029

Detroit Diesel Allison Division of General Motors Indianapolis, Indiana

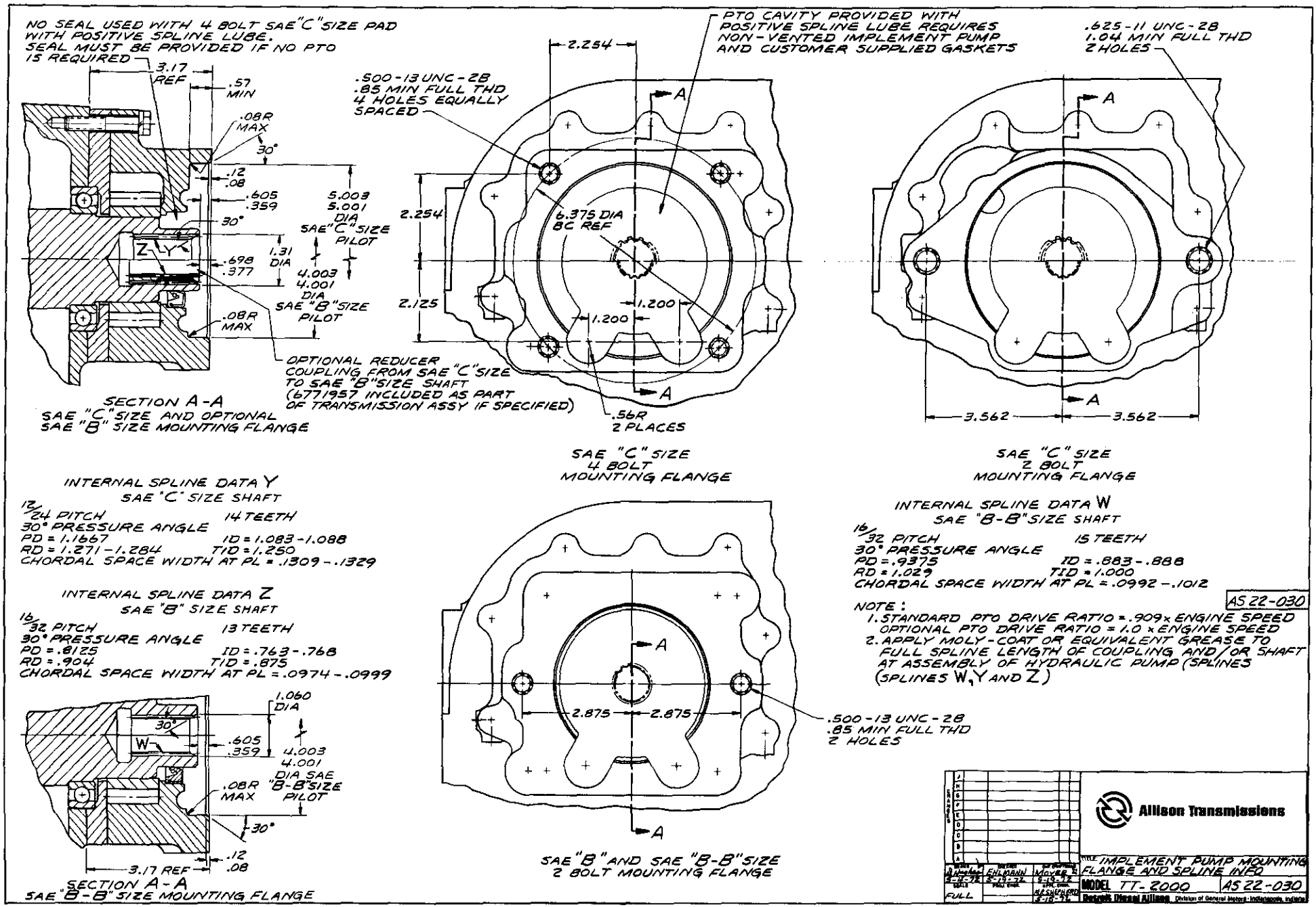
NO SEAL USED WITH 4 BOLT SAE "C" SIZE PAD WITH POSITIVE SPLINE LUBE. SEAL MUST BE PROVIDED IF NO PTO IS REQUIRED
3.17 REF
.57 MIN
.08R MAX
30°
.12
.08
.605
.359
5.003
5.001 DIA SAE "C" SIZE PILOT
30°
Z
Y
.698
.377
1.31 DIA
4.003
4.001 DIA SAE "B" SIZE PILOT
.08R MAX
OPTIONAL REDUCER COUPLING FROM SAE "C" SIZE TO SAE "B" SIZE SHAFT (6771957 INCLUDED AS PART OF TRANSMISSION ASSY IF SPECIFIED)
SECTION A-A
SAE "C" SIZE AND OPTIONAL SAE "B" SIZE MOUNTING FLANGE
.500-13 UNC-2B
.85 MIN FULL THD
4 HOLES EQUALLY SPACED
2.254
PTO CAVITY PROVIDED WITH POSITIVE SPLINE LUBE REQUIRES NON-VENTED IMPLEMENT PUMP AND CUSTOMER SUPPLIED GASKETS
A
2.254
6.375 DIA BC REF
2.125
1.200
1.200
.56R 2 PLACES
SAE "C" SIZE 4 BOLT MOUNTING FLANGE
.625-11 UNC-2B
1.04 MIN FULL THD
2 HOLES
3.562
3.562
SAE "C" SIZE 2 BOLT MOUNTING FLANGE
INTERNAL SPLINE DATA Y
SAE "C" SIZE SHAFT
12/24 PITCH 14 TEETH
30° PRESSURE ANGLE
PD = 1.1667 ID = 1.083-1.088
RD = 1.271-1.284 TID = 1.250
CHORDAL SPACE WIDTH AT PL = .1309-.1329
INTERNAL SPLINE DATA Z
SAE "B" SIZE SHAFT
16/32 PITCH 13 TEETH
30° PRESSURE ANGLE
PD = .8125 ID = .763-.768
RD = .904 TID = .875
CHORDAL SPACE WIDTH AT PL = .0974-.0999
1.060 DIA
30°
W
.605
.359
4.003
4.001 DIA SAE "B-B" SIZE PILOT
.08R MAX
30°
.12
.08
3.17 REF
SECTION A-A
SAE "B-B" SIZE MOUNTING FLANGE
2.875
2.875
.500-13 UNC-2B
.85 MIN FULL THD
2 HOLES
SAE "B" AND SAE "B-B" SIZE 2 BOLT MOUNTING FLANGE
INTERNAL SPLINE DATA W
SAE "B-B" SIZE SHAFT
16/32 PITCH 15 TEETH
30° PRESSURE ANGLE
PD = .9375 ID = .883-.888
RD = 1.029 TID = 1.000
CHORDAL SPACE WIDTH AT PL = .0992-.1012
AS 22-030
NOTE:
1. STANDARD PTO DRIVE RATIO = .909 x ENGINE SPEED
OPTIONAL PTO DRIVE RATIO = 1.0 x ENGINE SPEED
2. APPLY MOLY-COAT OR EQUIVALENT GREASE TO FULL SPLINE LENGTH OF COUPLING AND/OR SHAFT AT ASSEMBLY OF HYDRAULIC PUMP (SPLINES (SPLINES W, Y AND Z)
Allison Transmissions
IMPLEMENT PUMP MOUNTING FLANGE AND SPLINE INFO
MODEL TT-2000
AS 22-030
Detroit Diesel Allison Division of General Motors · Indianapolis, Indiana
FULL
EHLMANN
MOYER
5-19-72
5-19-72
5-19-72
5-18-72
5-18-72

MILLIMETRES TO INCHES			
mm MIN/NOM	mm MAX	in. MIN/NOM	in. MAX
1.02	2.03	.04	.08
7.36		.29	
9.14		.360	
10.00	14.02	.3934	.5519
16.76		.660	
22.48		.885	
23.22		.914	
30.48		1.200	
48.21		1.898	
82.58	82.62	3.251	3.253
106.35		4.187	

ENGINE DRIVEN
POWER TAKE-OFF DRIVE

NOTE:
1. STANDARD POWER TAKE-OFF DRIVE RATIO .909 x ENGINE SPEED. OPTIONAL POWER TAKE-OFF DRIVE RATIO 1.00 x ENGINE SPEED.
2. APPLY MOLY-COAT OR EQUIVALENT GREASE TO FULL SPLINE. LENGTH OF COUPLING AND/OR SHAFT AT ASSEMBLY OF HYDRAULIC PUMP (SPLINES **X** AND **Z**)

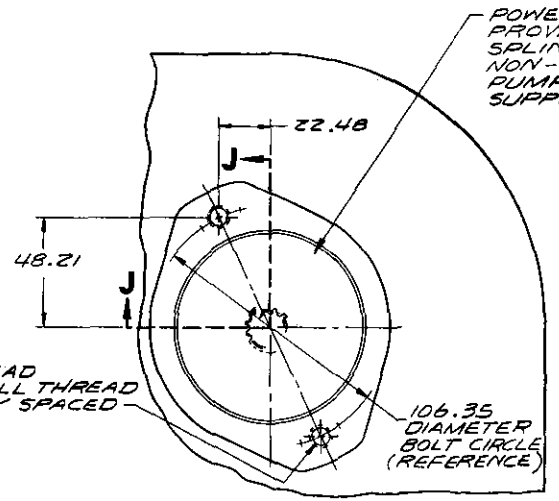

STEER PUMP MOUNTING FLANGE
SOCIETY OF AUTOMOTIVE ENGINEERS **A** SIZE

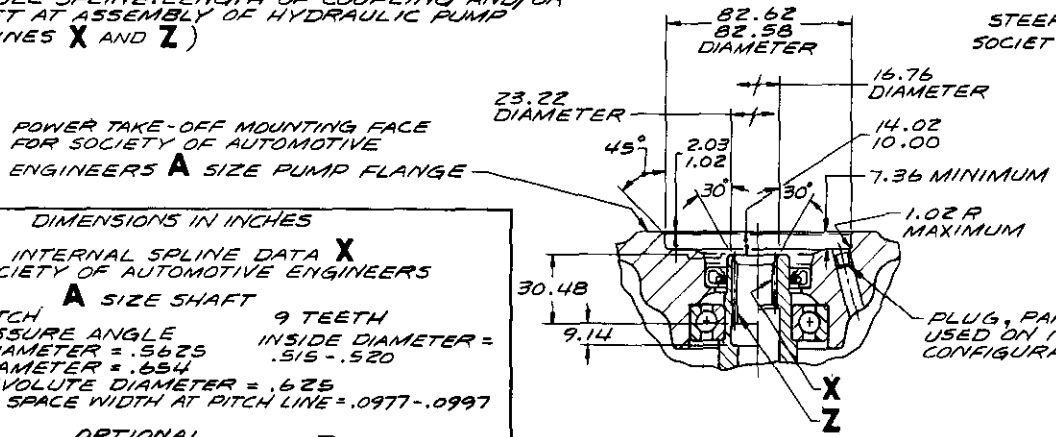

SECTION **J - J**
(SOCIETY OF AUTOMOTIVE ENGINEERS
A SIZE MOUNTING FLANGE)

AS 22-031

DIMENSIONS IN INCHES

INTERNAL SPLINE DATA **X**
SOCIETY OF AUTOMOTIVE ENGINEERS
A SIZE SHAFT

16/32 PITCH — 9 TEETH
30° PRESSURE ANGLE — INSIDE DIAMETER = .515 - .520
PITCH DIAMETER = .5625
ROOT DIAMETER = .654
TRUE INVOLUTE DIAMETER = .625
CHORDAL SPACE WIDTH AT PITCH LINE = .0977 - .0997

OPTIONAL
INTERNAL SPLINE DATA **Z**
SOCIETY OF AUTOMOTIVE ENGINEERS
B SIZE SHAFT

16/32 PITCH — 13 TEETH
30° PRESSURE ANGLE — INSIDE DIAMETER = .763 - .768
PITCH DIAMETER = .8125
ROOT DIAMETER = .904
TRUE INVOLUTE DIAMETER = .875
CHORDAL SPACE WIDTH AT PITCH LINE = .0979 - .0999

FOR MODELS
TT-2000
TRT-2000

METRIC
ALL DIMENSIONS ARE IN MILLIMETRES, UNLESS OTHERWISE SPECIFIED

THIRD ANGLE PROJECTION

B	9-13-72	DELETE TT 3000	AMH
A	4-5-72	INCORPORATE TO METRIC	AMH
DRAWN HUGHES 5-5-72	CHECKED EHLMANN 5-15-72	CHF DRAFTSMAN MD: 8-8 6-15-72	
DATE	PROJ. ENGR.	APPL. ENGR. WASHBURN 5-8-72	
FULL			

Allison Transmissions

TITLE: STEER PUMP MOUNTING FLANGE AND SPLINE INFORMATION

MODEL SEE NOTE | AS 22-031

Detroit Diesel Allison Division of General Motors - Indianapolis, Indiana

FORM 8202 S