MILLIMETRES TO INCHES			
mm MIN/NOM	mm MAX	in. MIN/NOM	in. MAX
295.9		11.65	
302.3		11.90	
305.3		12.02	
307.5		12.10	
309.6		12.19	
310.21		12.21	
311.9		12.28	
312.67		12.31	
317.50		12.50	
318.26		12.53	
320.55		12.62	
330.2		13.00	
336.6		13.25	
351.0		13.82	
363.6		14.31	
366.27		14.42	
372.15		14.650	
380.7		14.9	
383.0		15.08	
386.08		15.20	
392.0		15.43	
395.0		15.55	
395.2		15.56	
401.08		15.790	
414.78		16.33	
439.4		17.30	
441.46		17.380	
454.9		17.91	
463.30		18.24	
469.90		18.50	
487.2		19.18	
492.8		19.40	
494.54		19.47	
511.05	511.17	20.120	20.125
513.33		20.21	
	555.75		21.880
572.3		22.53	
606.55		23.88	
612.1		24.10	
662.9		26.10	
678.2		26.70	
743.3		29.26	
748.54		29.47	
ADDITIONS - CHG A			
652.2	653.4	25.68	25.72

METRIC VALUES	EQUIVALENTS
930 kPa	135 PSI
49 litres	13 GALLONS
1090 kg	2400 POUNDS
120° C	250° F
180 N	40 POUNDS

Allison Transmissions

SHEET 3

ELECTRIC INSTALLATION DRAWING

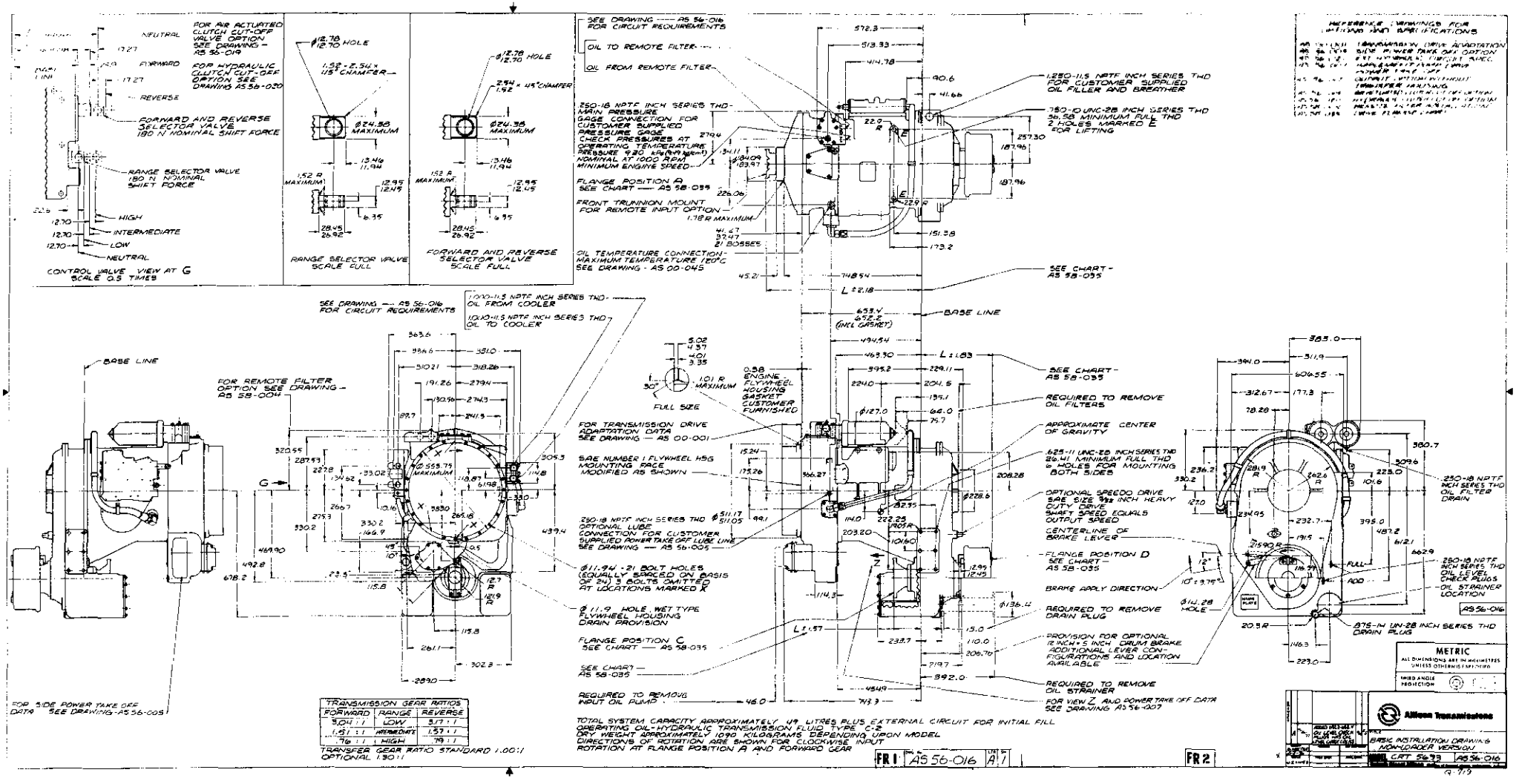
NEUTRAL
FORWARD
REVERSE
FOR AIR ACTUATED CLUTCH CUT-OFF VALVE OPTION SEE DRAWING - AS 56-019
FOR HYDRAULIC CLUTCH CUT-OFF OPTION SEE DRAWING AS 56-020
FORWARD AND REVERSE SELECTOR VALVE 180 N NOMINAL SHIFT FORCE
RANGE SELECTOR VALVE 180 N NOMINAL SHIFT FORCE
HIGH
INTERMEDIATE
LOW
NEUTRAL
CONTROL VALVE VIEW AT G SCALE 0.5 TIMES
RANGE SELECTOR VALVE SCALE FULL
FORWARD AND REVERSE SELECTOR VALVE SCALE FULL
SEE DRAWING — AS 56-016 FOR CIRCUIT REQUIREMENTS
OIL TO REMOTE FILTER
OIL FROM REMOTE FILTER
250-18 NPTF INCH SERIES THD - MAIN PRESSURE GAGE CONNECTION FOR CUSTOMER SUPPLIED PRESSURE GAGE CHECK PRESSURES AT OPERATING TEMPERATURE PRESSURE 4.20 KPa NOMINAL AT 1000 RPM MINIMUM ENGINE SPEED
FLANGE POSITION A SEE CHART — AS 58-035
FRONT TRUNNION MOUNT FOR REMOTE INPUT OPTION
OIL TEMPERATURE CONNECTION - MAXIMUM TEMPERATURE 120°C SEE DRAWING - AS 00-045
1.250-11.5 NPTF INCH SERIES THD FOR CUSTOMER SUPPLIED OIL FILLER AND BREATHER
750-10 UNC-2B INCH SERIES THD 36.58 MINIMUM FULL THD 2 HOLES MARKED E FOR LIFTING
SEE CHART - AS 58-035
BASE LINE
SEE CHART - AS 58-035
REQUIRED TO REMOVE OIL FILTERS
APPROXIMATE CENTER OF GRAVITY
625-11 UNC-2B INCH SERIES THD 26.41 MINIMUM FULL THD 6 HOLES FOR MOUNTING BOTH SIDES
OPTIONAL SPEEDO DRIVE SAE SIZE 3/32 INCH HEAVY DUTY DRIVE SHAFT SPEED EQUALS OUTPUT SPEED
CENTERLINE OF BRAKE LEVER
FLANGE POSITION D SEE CHART - AS 58-035
BRAKE APPLY DIRECTION
REQUIRED TO REMOVE DRAIN PLUG
PROVISION FOR OPTIONAL 12 INCH x 5 INCH DRUM BRAKE ADDITIONAL LEVER CONFIGURATIONS AND LOCATION AVAILABLE
REQUIRED TO REMOVE OIL STRAINER
FOR VIEW Z AND POWER TAKE OFF DATA SEE DRAWING AS 56-007
0.38 ENGINE FLYWHEEL HOUSING GASKET CUSTOMER FURNISHED
FULL SIZE
SEE DRAWING — AS 56-016 FOR CIRCUIT REQUIREMENTS
1.000-11.5 NPTF INCH SERIES THD - OIL FROM COOLER
1.000-11.5 NPTF INCH SERIES THD OIL TO COOLER
FOR REMOTE FILTER OPTION SEE DRAWING - AS 58-004
FOR TRANSMISSION DRIVE ADAPTATION DATA SEE DRAWING — AS 00-001
SAE NUMBER 1 FLYWHEEL HSG MOUNTING FACE MODIFIED AS SHOWN
250-18 NPTF INCH SERIES THD OPTIONAL LUBE CONNECTION FOR CUSTOMER SUPPLIED POWER TAKE OFF LUBE LINE SEE DRAWING — AS 56-005
Ø11.24 - 21 BOLT HOLES EQUALLY SPACED ON BASIS OF 24 3 BOLTS OMITTED AT LOCATIONS MARKED X
Ø11.9 HOLE WET TYPE FLYWHEEL HOUSING DRAIN PROVISION
FLANGE POSITION C SEE CHART — AS 58-035
SEE CHART — AS 58-035
REQUIRED TO REMOVE INPUT OIL PUMP
FOR SIDE POWER TAKE OFF DATA SEE DRAWING - AS 56-005
250-18 NPTF INCH SERIES THD OIL FILTER DRAIN
250-18 NPTF INCH SERIES THD OIL LEVEL CHECK PLUGS
OIL STRAINER LOCATION
AS 56-016
Ø14.28 HOLE
875-14 UN-2B INCH SERIES THD DRAIN PLUG
TRANSMISSION GEAR RATIOS
FORWARD | RANGE | REVERSE
5.04 : 1 | LOW | 5.17 : 1
1.61 : 1 | INTERMEDIATE | 1.53 : 1
1.00 : 1 | HIGH | 1.00 : 1
TRANSFER GEAR RATIO STANDARD 1.00:1 OPTIONAL 1.30:1
TOTAL SYSTEM CAPACITY APPROXIMATELY 49 LITRES PLUS EXTERNAL CIRCUIT FOR INITIAL FILL
OPERATING OIL-HYDRAULIC TRANSMISSION FLUID TYPE C-2
DRY WEIGHT APPROXIMATELY 1090 KILOGRAMS DEPENDING UPON MODEL
DIRECTIONS OF ROTATION ARE SHOWN FOR CLOCKWISE INPUT ROTATION AT FLANGE POSITION A AND FORWARD GEAR
FR 1
AS 56-016
FR 2
METRIC
ALL DIMENSIONS ARE IN MILLIMETRES UNLESS OTHERWISE SPECIFIED
THIRD ANGLE PROJECTION
Allison Transmissions
BASIC INSTALLATION DRAWING NON-LOADER VERSION
CAT 5633
AS 56-016

MILLIMETRES TO INCHES

mm MIN/NOM	mm MAX	in. MIN/NOM	in. MAX	mm MIN/NOM	mm MAX	in. MIN/NOM	in. MAX
0.38		.015		114.8		4.52	
0.5		.02		115.8		4.56	
	1.01		.04	116.59		4.59	
	1.52		.06	118.87		4.68	
1.52	2.54	.06	.10	121.9		4.80	
1.57		.062		127.0		5.00	
	1.78		.07	130.56		5.14	
1.83		.07		134.11		5.28	
2.18		.086		134.62		5.30	
3.35	4.01	.132	.158	135.1		5.32	
4.37	5.02	.172	.198	136.4		5.37	
6.35		.25					
10.16		.40		146.3		5.76	
11.9		.469		151.38		5.96	
11.94	13.46	.47	.53				
12.45	12.95	.49	.51	166.9		6.57	
12.70	12.78	.500	.503	173.2		6.82	
12.7		.50		175.26		6.90	
14.28		.5625		177.3		6.98	
15.0		.59		183.97	184.09	7.243	7.248
15.24		.60		187.96		7.40	
17.27		.70		191.26		7.53	
19.05		.75		191.5		7.54	
19.30		.76		203.20		8.00	
20.3		.80		204.5		8.05	
22.6		.89		206.76		8.14	
22.9		.90		208.28		8.20	
	24.38		1.2458	215.90		8.50	
25.9		1.02		219.7		8.65	
26.0		1.02		222.25		8.75	
26.40		1.04		223.0		8.78	
26.92	28.45	1.06	1.12	224.0		8.82	
33.0		1.30		226.06		8.90	
33.02		1.30		227.8		8.97	
36.58		1.44		228.6		9.00	
37.47	41.27	1.475	1.625	229.11		9.02	
41.66		1.64		232.7		9.16	
45.21		1.78		233.7		9.20	
46.0		1.81		234.95		9.250	
				236.2		9.30	
61.98		2.44					
64.0		2.52		241.3		9.50	
77.0		3.03		257.30		10.13	
				261.1		10.28	
78.28		3.082		262.13		10.32	
82.55		3.25		262.6		10.34	
89.7		3.53		265.18		10.44	
90.6		3.56		266.7		10.50	
99.1		3.90		274.3		10.80	
101.60		4.00		275.3		10.84	
101.6		4.00		279.4		11.00	
110.0		4.33		281.9		11.10	
114.0		4.48		287.53		11.32	
114.3		4.50		289.0		11.38	

AS56-016

Allison Transmissions

2 OF 3

BASIC INSTALLATION DRAWING

CRT5633 AS56-016

Q-719

MILLIMETRES TO INCHES			
mm MIN/NOM	mm MAX	in. MIN/NOM	in. MAX
295.9		11.65	
302.3		11.90	
305.3		12.02	
307.5		12.10	
309.6		12.19	
310.21		12.21	
311.9		12.28	
312.67		12.31	
317.50		12.50	
318.26		12.53	
320.55		12.62	
330.2		13.00	
336.6		13.25	
351.0		13.82	
363.6		14.31	
366.27		14.42	
380.7		14.9	
383.0		15.08	
386.08		15.20	
392.0		15.43	
395.0		15.55	
395.2		15.56	
401.08		15.790	
414.78		16.33	
439.4		17.30	
441.46		17.380	
454.9		17.91	
463.30		18.24	
469.90		18.50	
487.2		19.18	
492.8		19.40	
494.54		19.47	
511.05	511.17	20.120	20.125
513.33		20.21	
	555.75		21.880
572.3		22.53	
606.55		23.88	
612.1		24.10	
662.9		26.10	
678.2		26.70	
712.7		28.06	
748.54		29.47	
75.7		2.98	
127.0		5.00	
330.2		13.00	
394.0		15.51	
743.3		29.26	
ADDITIONS CHG A			
652.2	653.4	25.68	25.72

METRIC VALUES	EQUIVALENTS
930 kPa	135 PSI
49 litres	13 GALLONS
1090 kg	2400 POUNDS
120° C	250° F
180 N	40 POUNDS

A556-016

Allison Transmissions

3 OF 3

GAS INSTALLATION DRAWING

MODEL CRT5633 A556-016

Q-719

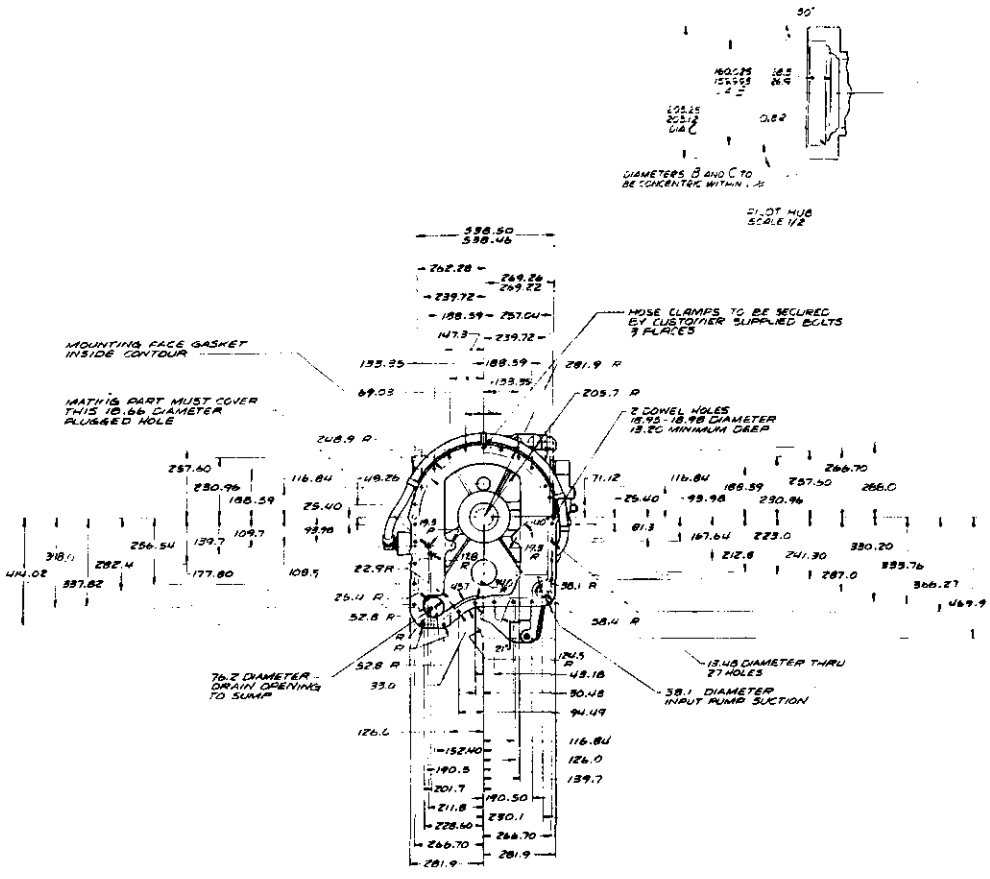

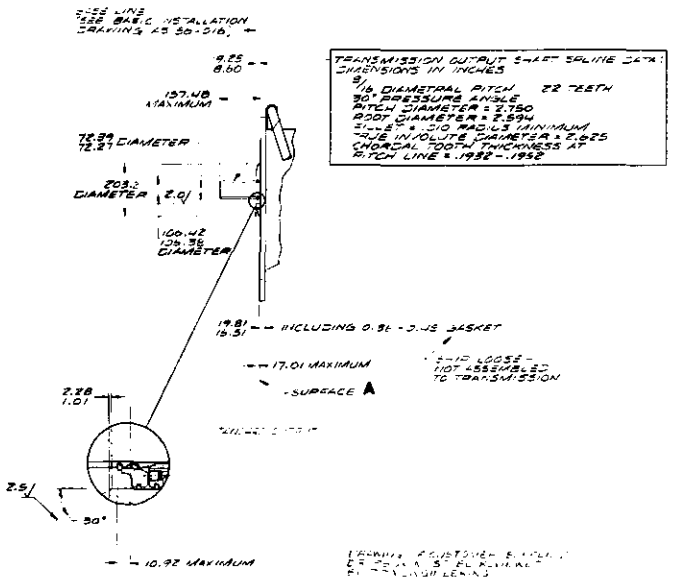

CUSTOMER SUPPLIED
TRANSFER GEAR CASE DESIGN RECOMMENDATIONS:
SUMP CAPACITY - APPROXIMATELY 38 LITRES
OIL LEVEL - FULL 152 MILLIMETRES BELOW INPUT CENTERLINE
OIL LEVEL - ADD 3/8 MILLIMETRES BELOW INPUT CENTERLINE
SUMP SCREEN - 60 x 40 WIRE MESH
APPROXIMATELY 104 SQUARE METRE OPEN AREA
SUCTION PASSAGE SIZE - 38.1 MINIMUM DIAMETER
FOR OUTPUT TRANSFER GEAR CAVITY SCAVENGE AND 19.05 DIAMETER HOLE COMMUNICATING SUMP TO GEAR CAVITY - SEE DRAWING NUMBER 6787538
TRANSMISSION BREATHER AND OIL FILL HOLE REQUIRED IN TRANSFER GEAR CASE

METRIC
ALL DIMENSIONS ARE IN MILLIMETRES UNLESS OTHERWISE SPECIFIED
THIRD ANGLE PROJECTION

Allison Transmissions

UNIT - PILOT OPTION
1101 LOADER VERSION
WITHOUT TRANSFER HOUSING

MODEL CRT 5633-7 | AS 56-017

FR1 | AS 56-017 C 1 | FR2

MILLIMETRES TO INCHES

mm MIN/NOM	mm MAX	in. MIN/NOM	in. MAX
.36	.45	.014	.018
1.01	2.28	.04	.09
	10.92		.43
13.20		.520	
13.48		.531	
	17.01		.670
16.51	19.81	.65	.78
17.8		.70	
18.60	19.25	.732	.758
18.66		.735	
18.95	18.98	.7463	.7473
19.3		.76	
22.9		.90	
25.40		1.000	
30.48		1.200	
33.0		1.30	
38.1		1.50	
43.18		1.700	
45.7		1.80	
48.26		1.900	
52.8		2.08	
58.4		2.30	
69.03		2.718	
71.12		2.800	
72.27	72.39	2.845	2.850
76.2		3.00	
81.3		3.20	
92.5		3.64	
93.98		3.700	
94.49		3.720	
106.38	106.42	4.190	4.188
108.5		4.27	
109.7		4.32	
116.84		4.600	
124.5		4.90	
126.0		4.96	
133.35		5.250	
139.7		5.50	
147.3		5.80	
152.40		6.000	
	157.48		6.200
167.64		6.600	
177.80		7.000	
188.59		7.425	
190.50		7.500	
201.7		7.94	
203.2		8.00	
205.7		8.10	
211.8		8.34	
212.8		8.38	

MILLIMETRES TO INCHES

mm MIN/NOM	mm MAX	in. MIN/NOM	in. MAX
223.0		8.78	
228.60		9.000	
230.1		9.06	
230.96		9.093	
239.72		9.438	
241.30		9.500	
248.9		9.80	
256.54		10.100	
257.04		10.120	
257.60		10.142	
262.28		10.326	
266.70		10.500	
269.22	269.26	10.599	10.601
281.9		11.10	
282.4		11.12	
287.0		11.30	
288.0		11.34	
330.20		13.000	
333.76		13.140	
337.82		13.300	
348.0		13.70	
366.27		14.420	
414.02		16.300	
452.0		17.80	
469.9		18.50	
516.0		20.30	
538.46	538.50	21.199	21.201

MILLIMETRES TO INCHES

mm MIN / NOM	mm MAX	in MIN / NOM	in MAX
ADDITIONS	CHG C		
0.8		.03	
26.9	28.5	1.06	1.12
50.8		2.00	
159.995	160.025	6.299	6.3002
203.12	203.25	7.997	8.002

METRIC VALUES	EQUIVALENTS
2.0 √	80 √
2.5 √	100 √
38 LITRES	10 GALLONS
.04 SQ METRE	70 SQ INCHES

SHEET 2 OF 2

Allison Transmissions

OUTPUT OPTIONS

CRT5633-7A556-017

METRIC VALUES	EQUIVALENTS
2.00 LITRE/s	30 GPM
120°C	250°F
34 kPa	5 PSI
70-100 kPa	10-15 PSI
140-170 kPa	20-25 PSI
210 kPa	30 PSI

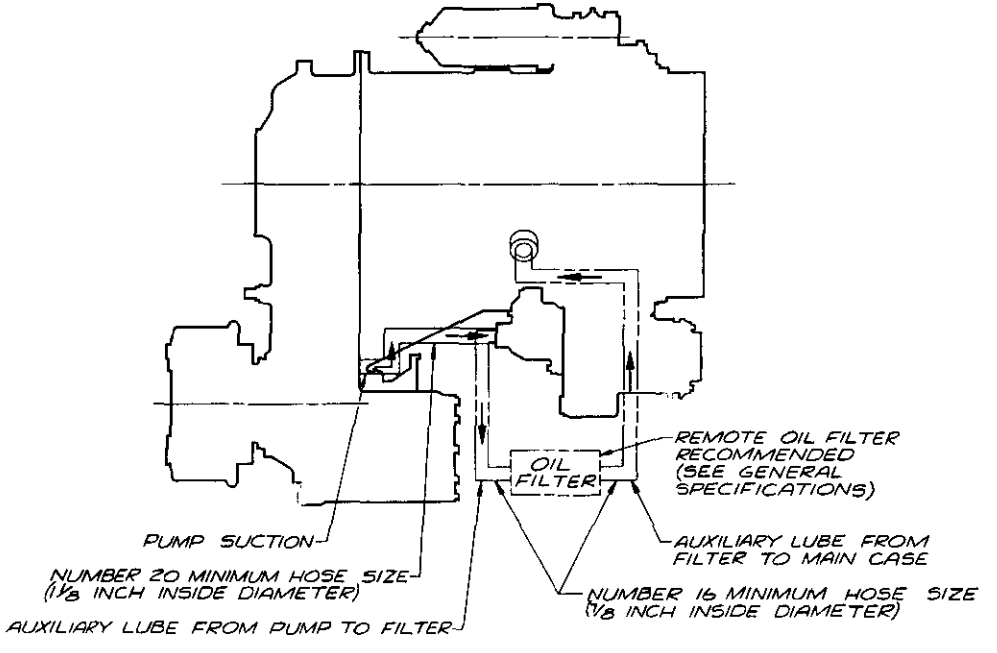

PARTS SHOWN IN PHANTOM ARE FURNISHED BY CUSTOMER

AS 56-018

FOR TRANSMISSION INSTALLATION DATA NOT SHOWN SEE BASIC INSTALLATION DRAWING – AS 56-015

REMOTE OIL FILTER - GENERAL SPECIFICATIONS

OIL FLOW	2.00 LITRE/s MAXIMUM
OPERATING OIL PRESSURE	210 kPa (2.14 kg/cm²)
OPERATING OIL TEMPERATURE	120°C MAXIMUM CONTINUOUS
OIL PRESSURE DROP	34 kPa (0.35 kg/cm²) MAXIMUM
BY-PASS VALVE TO BE INCORPORATED IN FILTER ASSEMBLY	
-INITIAL BY-PASS PRESSURE	70-100 kPa (0.71-1.02 kg/cm²)
-FULL BY-PASS PRESSURE	140-170 kPa (1.43-1.73 kg/cm²)
DEGREE OF FILTRATION	44 MICRONS MAXIMUM
INTERVAL BETWEEN SERVICING	500-1000 HOURS

TYPE OF CONTAMINATE
EARTH, IRON, STEEL, BRONZE, COPPER, AND ALUMINUM PARTICLES, ROCK, COAL, AND CEMENT DUST

METHOD OF INSTALLATION:
INDEPENDENT MOUNTED WITH 1.00-11.5 NPTF INCH SERIES MINIMUM PIPE TAP CONNECTIONS

METRIC
ALL DIMENSIONS ARE IN MILLIMETRES, UNLESS OTHERWISE SPECIFIED

THIRD ANGLE PROJECTION

CHANGES

Allison Transmissions

DRAWN	CHECKED	DIR. DRAFTSMAN	TITLE
D. NEW 8-18-73	ENLMANN 9-7-73	MOYER 9-7-73	AUXILIARY LUBE CIRCUIT
SCALE 0.12 TIMES	MGR. ENGR.	MGR. ENGR. SHEPHERD 8-29-73	MODEL CRT 5633 — AS 56-018

Detroit Diesel Allison Division of General Motors · Indianapolis, Indiana

METRIC TO INCHES			
MM MIN/NOM	MM MAX	IN MIN/NOM	IN MAX
10.16		.400	
11.2		.44	
11.9		.47	
12.68		.4995	
17.3	20.1	.68	.79
20.8		.82	
28.58		1.125	
33.0		1.31	
310.21		12.213	
407.78		16.054	

METRIC VALUES	EQUIVALENTS
76 N	17 POUNDS
156 N	35 POUNDS

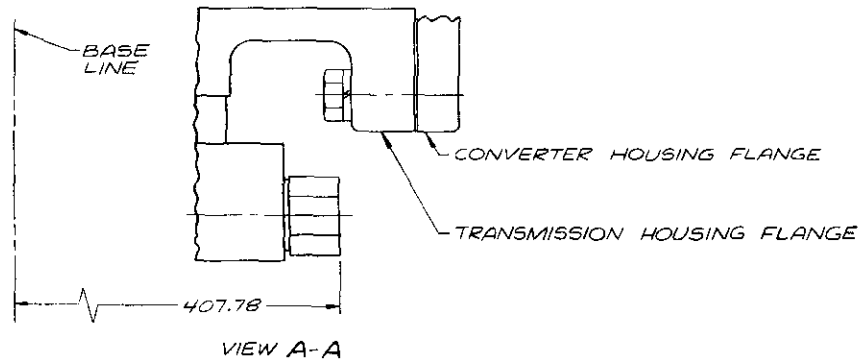

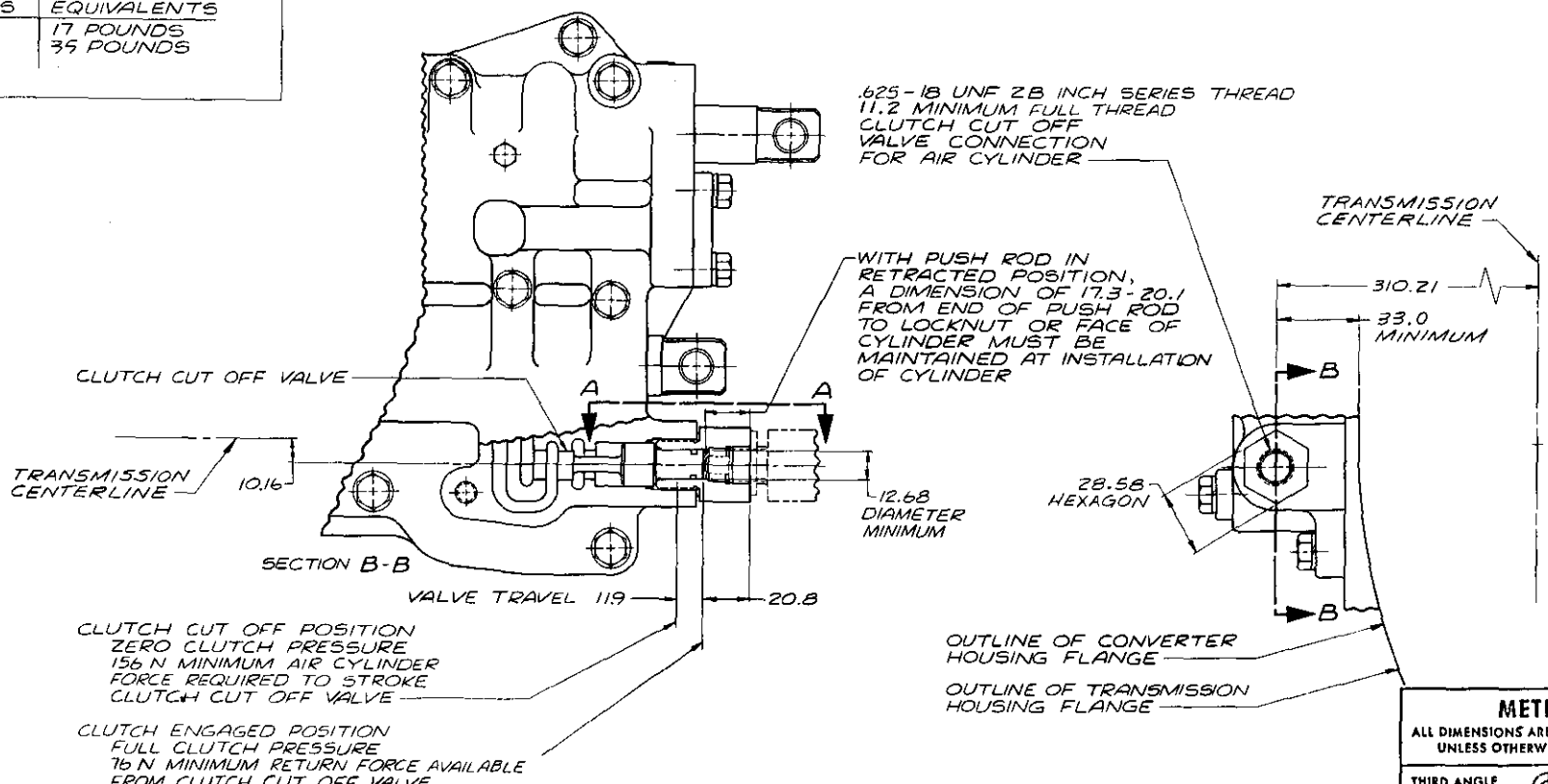

AS 56-019

METRIC
ALL DIMENSIONS ARE IN MILLIMETRES, UNLESS OTHERWISE SPECIFIED

THIRD ANGLE PROJECTION

NOTE:
1. AIR MUST NOT BE INTRODUCED INTO VALVE BODY
2. AIR CYLINDER TO ACTUATE VALVE BY MEANS OF PUSH ROD AND PROVIDE POSITIVE RETURN FORCE
3. TRANSMISSION ENGINEERING DEPARTMENT'S APPROVAL IS A PREREQUISITE TO USE OF ACTUATING MECHANISM

FOR TRANSMISSION INSTALLATION DATA NOT SHOWN SEE BASIC INSTALLATION DRAWING – AS 56-015 OR AS 56-016

PARTS SHOWN IN PHANTOM ARE CUSTOMER FURNISHED

DRAWN BY D. NEW 11-24-75	DESIGNED S. GEBBY 3-10-75	CHECKED BY [illegible] 3-11-75	Allison Transmissions
SCALE FULL	PROJ. ENGR. G. HADLEY 3-10-75	APPL. ENGR. R. KESLER 3-10-75	TITLE AIR ACTUATED CLUTCH CUT OFF OPTION
			MODEL CRT 5633 — AS 56-019
			Detroit Diesel Allison Division of General Motors · Indianapolis, Indiana

MILLIMETRES TO INCHES			
mm MIN/NOM	mm MAX	in MIN/NOM	in MAX
10.16		.40	
28.58		1.125	
33.0		1.31	
310.21		12.213	
407.78		16.054	

METRIC VALUES	EQUIVALENTS
1034 kPa	150 PSI
13790 kPa	2000 PSI

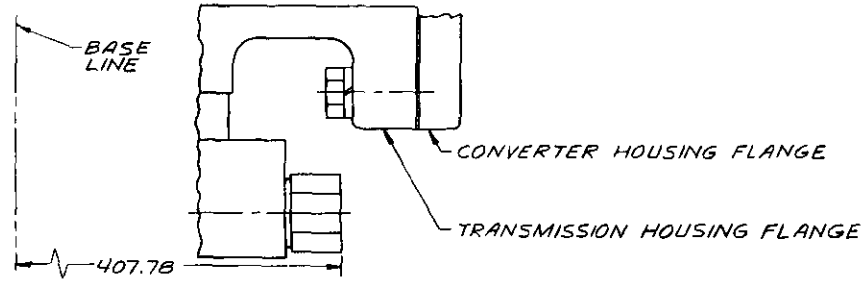

VIEW A-A

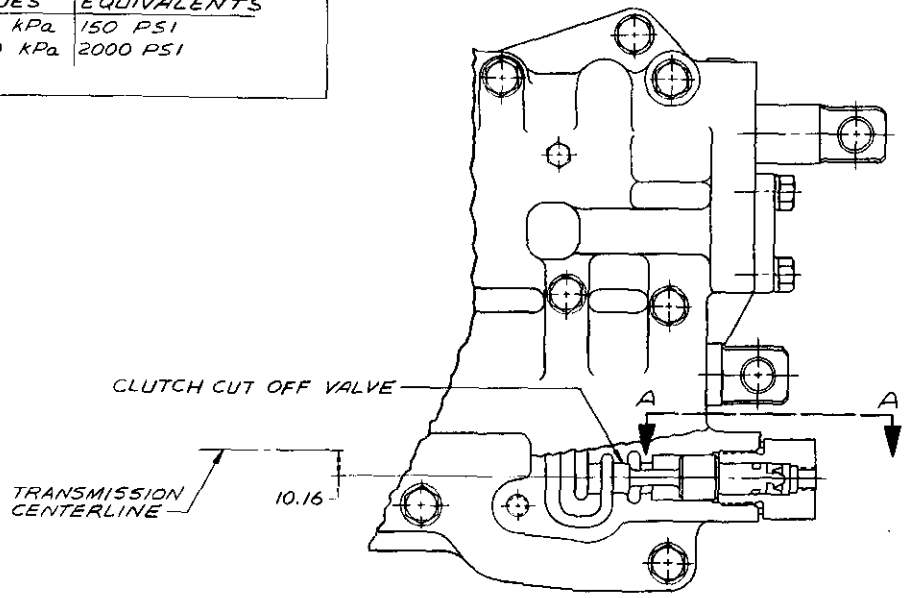

SECTION B-B

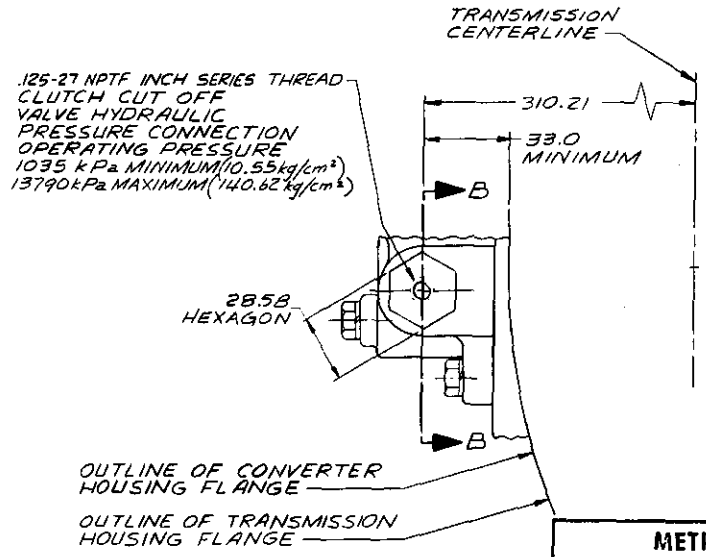

AS 56-020

METRIC
ALL DIMENSIONS ARE IN MILLIMETRES, UNLESS OTHERWISE SPECIFIED

THIRD ANGLE PROJECTION

FOR TRANSMISSION INSTALLATION DATA NOT SHOWN SEE BASIC INSTALLATION DRAWING – AS 56-015 OR AS 56-016

Allison Transmissions

DRAWN POWELL 11-28-73	DESIGN G. GREGY 3-12-75	SUPERVISOR 4/16/75	TITLE HYDRAULIC CLUTCH CUT-OFF OPTION
SCALE FULL	PROJ. ENGR G. HADLEY 3-12-75	APPL. ENGR R. KESLER 3-12-75	MODEL CRT 5633 — AS 56-020

Detroit Diesel Allison Division of General Motors · Indianapolis, Indiana

METRIC VALUES	EQUIVALENTS
-40°C	-40°F
+121°C	+250°F
+135°C	+275°F
2.52 LITRES/SEC	40 GPM
34 kPa	5 PSI
241 kPa	35 PSI
448 kPa	65 PSI
1379 kPa	200 PSI
103 kPa	15 PSI
70-100 kPa	10-15 PSI
140-170 kPa	20-25 PSI

REFERENCE DRAWINGS FOR OPTIONS AND SPECIFICATIONS

AS 56-022 COOLER OIL FLOW

COOLER CIRCUIT PRESSURE SPECIFICATIONS:

AT OPERATING TEMPERATURE AND MAXIMUM SPEED, HIGH RANGE
MAXIMUM ALLOWABLE CONVERTER OUT OIL PRESSURE 448 kPa (4.57 kg/cm²)
MAXIMUM ALLOWABLE EXTERNAL CIRCUIT PRESSURE DROP, 241 kPa (2.46 kg/cm²)

REFERENCE:
AS 56-022 CURVE FOR COOLER OIL FLOW
BASIC INSTALLATION DRAWING — AS 56-015 AND AS 56-016

HOSE SPECIFICATION:
SAE 100 R 5 EXCEPT OPERATING TEMPERATURE RANGE FROM -40°C TO +135°C

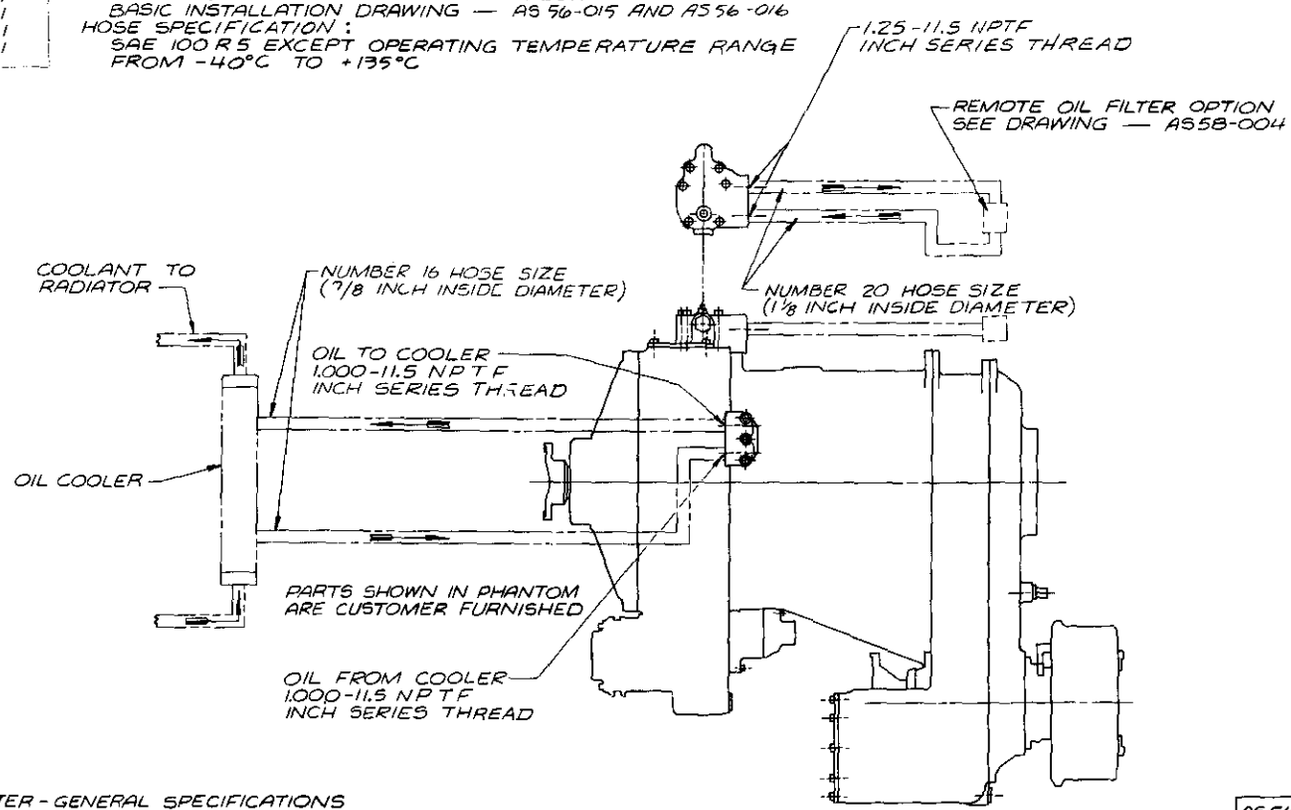

AS 56-021

REMOTE OIL FILTER - GENERAL SPECIFICATIONS

TYPE OF FLUID	HYDRAULIC TRANSMISSION FLUID TYPE C-2
OIL FLOW	2.52 litre/s MAXIMUM
OPERATING OIL PRESSURE	1379 kPa (14.06 kg/cm²) MAXIMUM
OPERATING OIL TEMPERATURE	121.1°C MAXIMUM CONTINUOUS
OIL PRESSURE DROP:	
INITIAL (CLEAN ELEMENT)	34 kPa (.35 kg/cm²) MAXIMUM
MAXIMUM PRIOR TO SERVICING	103 kPa (1.05 kg/cm²)
BY-PASS VALVE TO BE INCORPORATED IN FILTER ASSEMBLY	
INITIAL BY-PASS PRESSURE	70 - 100 kPa (.71-1.02 kg/cm²)
FULL BY-PASS PRESSURE	140 - 170 kPa (1.43-1.73 kg/cm²)
DEGREE OF FILTRATION	44 MICROMETRES MAXIMUM
INTERVAL BETWEEN SERVICING	500 HOURS

TYPE OF CONTAMINATE:
EARTH, IRON, STEEL, BRONZE, COPPER AND ALUMINUM PARTICLES
ROCK, COAL AND CEMENT DUST

METHOD OF INSTALLATION:
INDEPENDENT MOUNTED WITH 1.00-11.5 NPTF INCH SERIES MINIMUM PIPE TAP CONNECTIONS

METRIC
ALL DIMENSIONS ARE IN MILLIMETRES, UNLESS OTHERWISE SPECIFIED

THIRD ANGLE PROJECTION

Allison Transmissions

TITLE: EXTERNAL HYDRAULIC CIRCUIT

MODEL CRT 5633 | AS56-021

Detroit Diesel Allison Division of General Motors · Indianapolis, Indiana

REF

COOLER OIL FLOW DATA
CRT-5633 TRANSMISSION

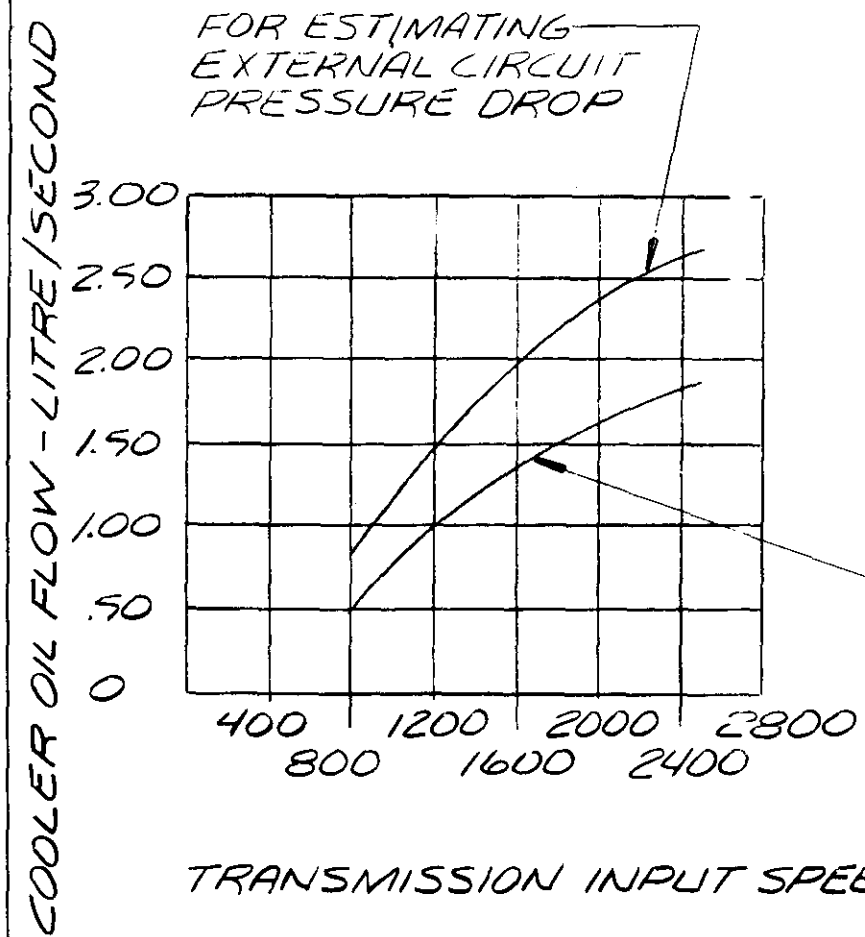

COOLER CIRCUIT PRESSURE SPECIFICATIONS:

1. AT OPERATING TEMPERATURE AND MAXIMUM SPEED IN TRAVEL GEAR - MAXIMUM ALLOWABLE CONVERTER OUT OIL PRESSURE 448 kPa (4.57 kg/cm²)
   MAXIMUM ALLOWABLE EXTERNAL CIRCUIT PRESSURE DROP 241 kPa (2.46 kg/cm²)
2. AT OPERATING TEMPERATURE AND FULL THROTTLE STALL, MINIMUM ALLOWABLE CONVERTER OUT OIL PRESSURE 241 kPa (2.46 kg/cm²)
   CUSTOMER TO INSTALL RESTRICTION IN COOLER RETURN LINE IF NECESSARY

METRIC
ALL DIMENSIONS ARE IN MILLIMETRES, UNLESS OTHERWISE SPECIFIED

THIRD ANGLE PROJECTION

Allison Transmissions

SHEET 1 OF 2

COOLER OIL FLOW

MODEL CRT-5633 A556-022

NOVA

METRIC VALUES	EQUIVALENTS
241 kPa	35 PSI
448 kPa	65 PSI

COOLER OIL FLOW DATA
CRT-5633 TRANSMISSION

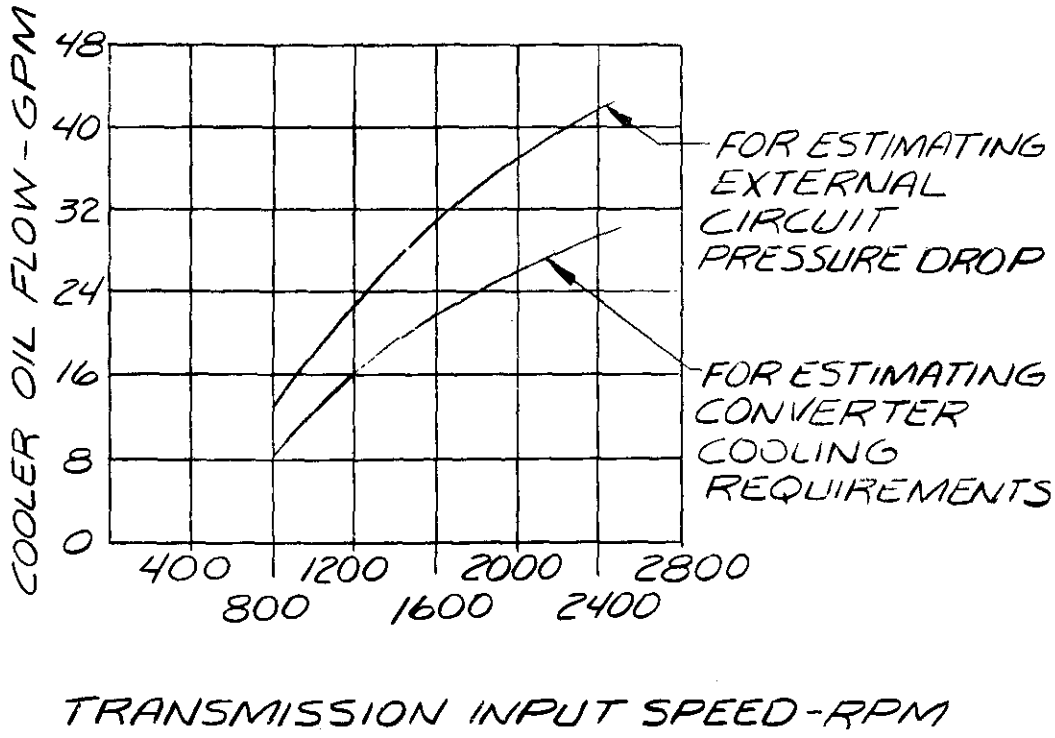

Allison Transmission
SHEET 2 OF 2
COOLER OIL FLOW
MODEL CRT 5633 AS56-022
NONE

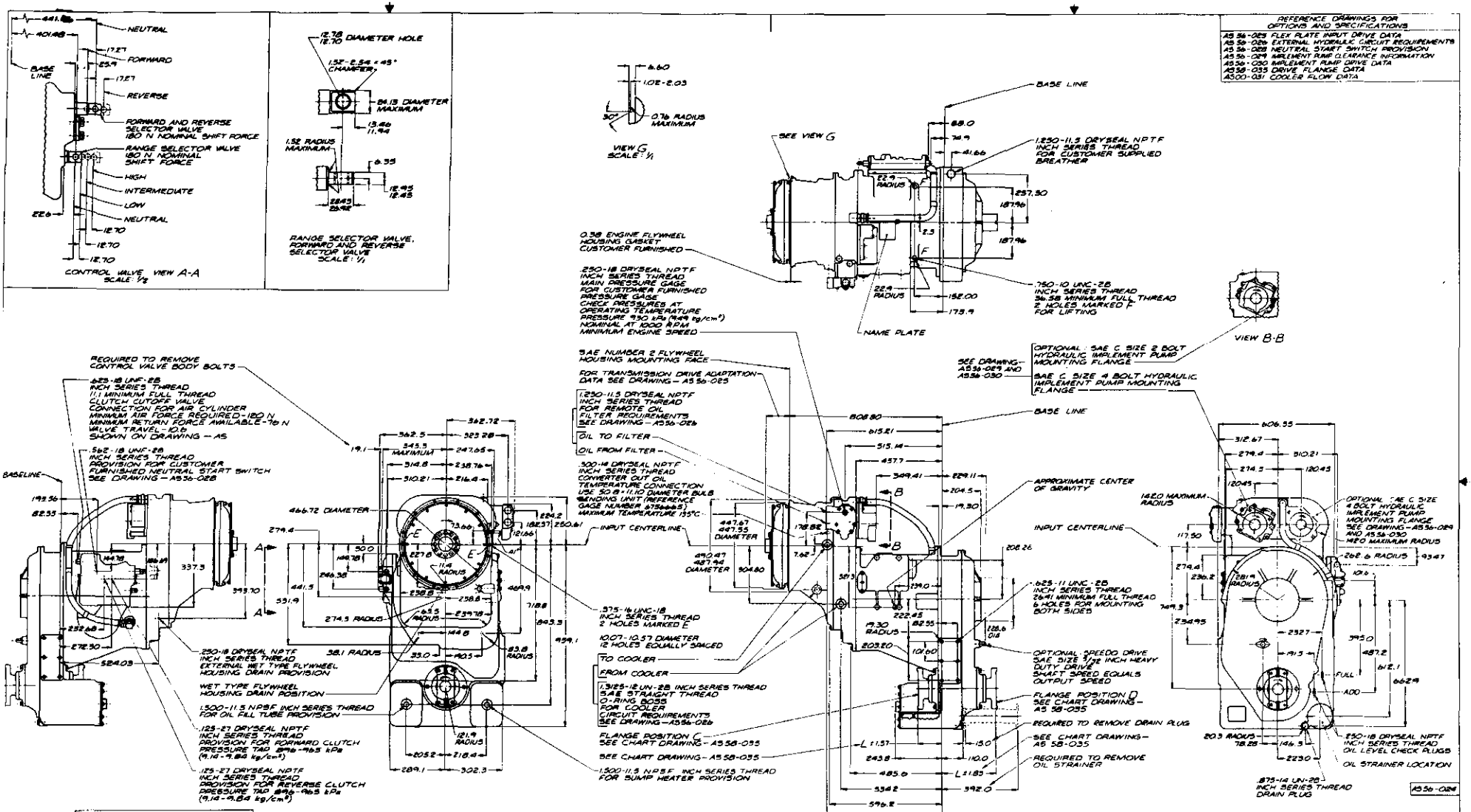

REFERENCE DRAWINGS FOR OPTIONS AND SPECIFICATIONS

- A556-025 FLEX PLATE INPUT DRIVE DATA
- A556-026 EXTERNAL HYDRAULIC CIRCUIT REQUIREMENTS
- A556-028 NEUTRAL START SWITCH PROVISION
- A556-029 IMPLEMENT PUMP CLEARANCE INFORMATION
- A556-030 IMPLEMENT PUMP DRIVE DATA
- A558-035 DRIVE FLANGE DATA
- A500-031 COOLER FLOW DATA

STANDARD TRANSMISSION GEAR RATIOS		
FORWARD	RANGE	REVERSE
3.04 : 1	LOW	3.16 : 1
1.51 : 1	INTERMEDIATE	1.57 : 1
.76 : 1	HIGH	.79 : 1

TRANSFER GEAR RATIO: STANDARD 1.00:1
OPTIONAL 1.30:1

OPERATING OIL - HYDRAULIC TRANSMISSION FLUID TYPE C-3

TOTAL CAPACITY APPROXIMATELY 49 LITRES PLUS EXTERNAL CIRCUIT

DRY WEIGHT APPROXIMATELY 1125 KILOGRAMS

DRIVE FLANGE - ADD 3 KILOGRAMS

DIRECTIONS OF ROTATION ARE SHOWN FOR CLOCKWISE INPUT ROTATION AND FORWARD GEAR

THE TRANSMISSION SHIFT CONTROL SYSTEM DESIGN SHOULD BE REVIEWED BY DETROIT DIESEL ALLISON DIVISION OF GENERAL MOTORS CORP. TRANSMISSION ENGINEERING DEPARTMENT.

METRIC
ALL DIMENSIONS ARE IN MILLIMETRES UNLESS OTHERWISE SPECIFIED
THIRD ANGLE PROJECTION

Allison Transmissions

SHEET 1

BASIC INSTALLATION DRAWING

MODEL CRT 5643 A556-024

A556-024 C

FIG 2

MILLIMETRES TO INCHES

mm MIN/NOM	mm MAX	in. MIN/NOM	in. MAX
0.2800		0.01488	
0.7800		0.02382	
1.0200	2.0300	0.04018	0.07982
1.5200		0.05584	
1.5200	2.5400	0.07584	0.10000
1.5700		0.06181	
1.8300		0.07205	
2.5000		0.09843	
2.5500		0.10000	
6.5000		0.25584	
7.6200		0.30000	
10.0700	10.5700	0.39646	0.41614
10.8000		0.41732	
11.0000		0.43701	
11.4000		0.44882	
11.9800	12.4800	0.47008	0.51882
12.4500	12.9500	0.49018	0.50984
12.7000		0.50000	
12.7000	12.7800	0.50000	0.50315
14.2000		0.55908	
15.0000		0.59055	
15.7000		0.61811	
17.2700		0.67882	
18.1000		0.71197	
18.2000		0.71584	
20.3000		0.79921	
21.3500		0.83700	
22.6000		0.88976	
22.9000		0.90158	
24.1300		0.95000	
25.5000		1.01378	
28.4100		1.03878	
28.8270	28.4500	1.05484	1.12008
33.0000		1.29921	
36.5800		1.44016	
38.1000		1.50000	
41.6300		1.64016	
50.0000		1.96850	
50.8000		2.00000	
57.2500		2.25394	
63.5000		2.50000	
73.0200		2.87480	
73.3800		2.90000	
74.8000		2.94882	
78.2800		3.08189	
93.6700		3.87882	
101.8000		4.00000	
110.0000		4.33071	
117.3000		4.62598	
120.4500		4.74213	
121.3800		4.78573	
121.8000		4.79921	
142.0000		5.58653	
144.7800		5.70000	
144.8000		5.70078	
148.3000		5.75584	
152.0000		5.98425	
172.8000		6.80448	
178.8200		7.04018	
182.3700		7.17897	
185.3300		7.29000	
187.8400		7.40000	
190.8600		7.50000	
191.3000		7.52937	
193.3800		7.62047	
203.2000		8.00000	
203.2000		8.07874	
208.2800		8.20000	
218.4000		8.59843	
218.4000		8.59843	
222.4500		8.75788	
223.0000		8.77953	
224.8000		8.82677	
224.8100		8.85858	
227.0000		8.94881	
228.1100		9.02068	
232.3200		9.18063	
232.7000		9.16142	
234.8300		9.25000	
235.2000		9.26821	
235.7300		9.30000	
235.8000		9.40158	
239.0000		9.40849	
239.7800		9.44016	
243.8000		9.59843	
245.3830		9.70000	
247.8530		9.75000	
250.3100		9.85834	
257.3000		10.13382	
258.3000		10.33858	
272.3000		10.72048	
274.3000		10.79822	
279.4000		11.00000	
279.1000		11.38188	
283.2000		11.54528	
304.8000		12.00000	
310.2100		12.21300	
312.8700		12.30183	
314.5000		12.38370	
321.2000		12.64961	
322.2300		12.72754	
337.3000		13.27853	
345.3000		13.59448	
349.4.0		13.75630	
362.3370		14.27128	
362.7200		14.28632	
382.0000		15.03307	

MILLIMETRES TO INCHES

mm MIN/NOM	mm MAX	in. MIN/NOM	in. MAX
383.7000		15.30000	
385.0000		15.35118	
401.4800		15.80850	
441.8300		17.38032	
441.9000		17.38189	
447.9300	447.8700	17.62481	17.62481
457.7000		18.01889	
468.7200		18.37481	
483.8650		19.00000	
483.8000		19.11811	
487.2000		19.18111	
487.5400	490.4700	19.21024	19.30385
513.1400		20.20111	
524.0300		20.63111	
531.9000		20.94088	
534.2000		21.03150	
588.2000		23.47245	
608.5500		23.97953	
608.8500		23.98937	
612.1000		24.08843	
615.2100		24.22087	
687.8000		28.08843	
719.8000		28.29922	
749.3000		29.50001	
808.8000		31.84252	
843.3000		33.20080	
958.1000		37.75589	

ADDITIONS	CHANGE A	
204.5000		8.05118
228.6000		9.00000

METRIC VALUE	EQUIVALENT
135°C	275°F
49 LITRE	13 GAL
1125 kg	2480 LB
3 kg	7 LB
930 kPa	135 PSI
896-965 kPa	130-140 PSI
120 N	27 LB
76 N	17 LB

AS56-024

METRIC

ALL DIMENSIONS ARE IN MILLIMETRES, UNLESS OTHERWISE SPECIFIED

THIRD ANGLE PROJECTION

G810

CHANGES

X	4	ADDED DIMENSIONS	TOF

DRAWN D. NEW	ISSUED 9 JUL 80	CAT ENGINEER MOYER/K.N.
DESIGN	CHECK	
0.2 TIMES	SMILEY 10 JUL 80	PASHANG 10 JUL 80

Allison Transmissions

SHEET 2

TITLE: BASIC INSTALLATION DRAWING

MODEL CAT 3643 | AS56-024

Detroit Diesel Allison Division of General Motors - Indianapolis, Indiana

FORM 8302 S

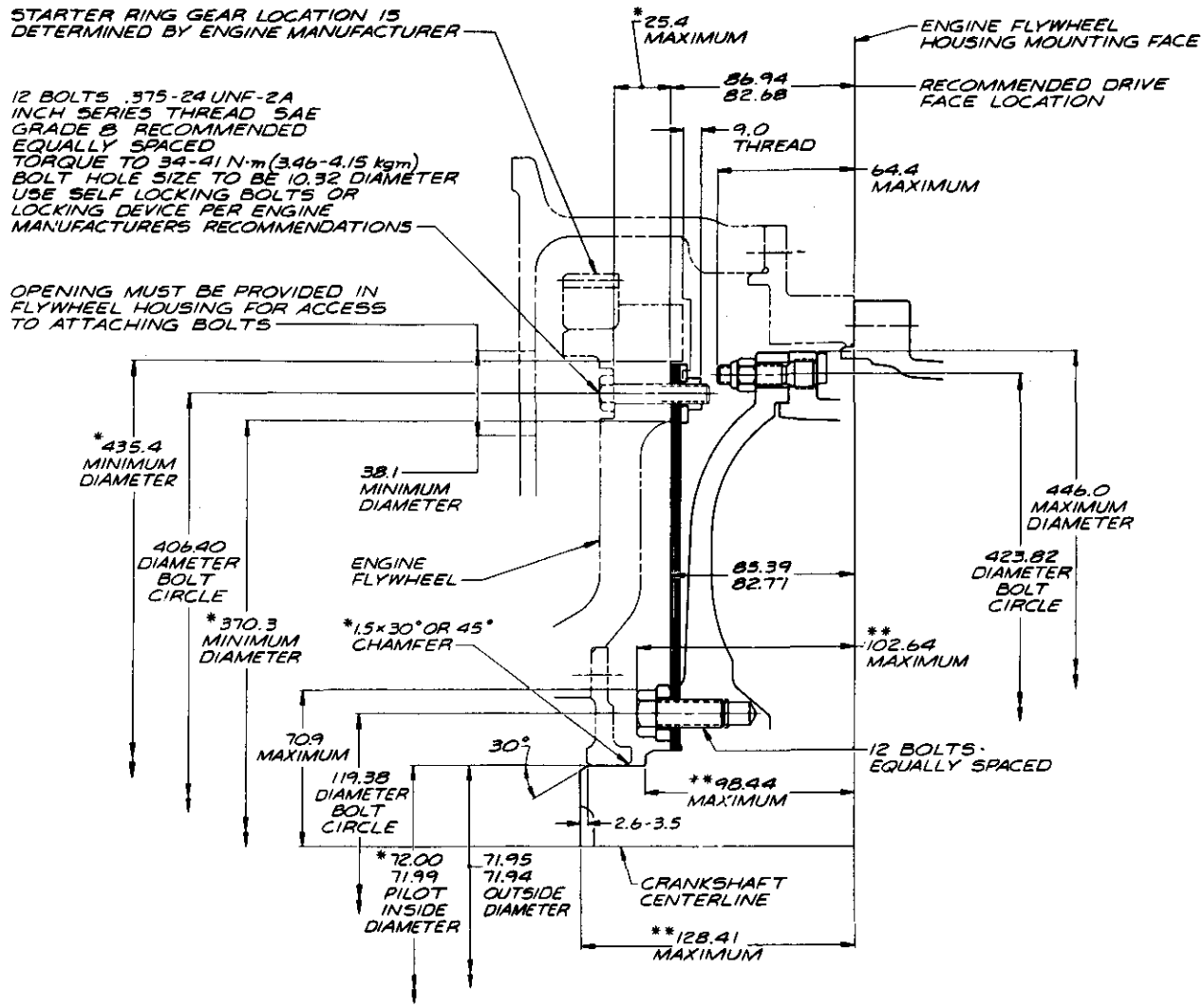

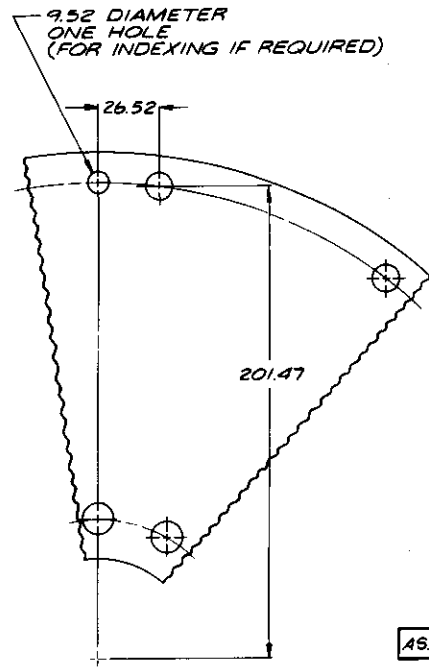

FLEX PLATE HOLE PATTERN

A556-025

ALL PHYSICAL ADAPTATION DESIGNS SHOULD BE REVIEWED BY DETROIT DIESEL ALLISON DIVISION, GENERAL MOTORS CORPORATION, TRANSMISSION ENGINEERING DEPARTMENT

* DENOTES RECOMMENDED DIMENSION

** DENOTES DIMENSION INCLUDES CONVERTER BALLOONING

ENGINE FLYWHEEL HOUSING AND FLYWHEEL PILOT DIAMETERS MUST MEET SAE CONCENTRICITY REQUIREMENTS

PROVISION FOR A WET TYPE FLYWHEEL HOUSING MUST BE MADE. REFER TO BASIC INSTALLATION DRAWING—A556-024 FOR DETAILS. SPLITLINE GASKET CUSTOMER SUPPLIED, SEALED STARTER, DOUBLE SEAL ON CRANKSHAFT, AND DRAIN BACK PROVISION MUST BE SUPPLIED ON ENGINE

METRIC
ALL DIMENSIONS ARE IN MILLIMETRES, UNLESS OTHERWISE SPECIFIED

THIRD ANGLE PROJECTION

CHANGES

1	A 20 SEP 93	REVISED PHYSICAL ADAPTATION NOTE	

DRAWN D. MEIN 02 MAY 90 — CHECKED D. MEYER 02 JUN 90 — SUPERVISOR — SUPV. ENGR. M. POCIASK 12 JUL 90 — SCALE 1/1

Allison Transmissions

SHEET 1 OF 2

TITLE: FLEX PLATE INPUT DRIVE DATA

MODEL CRT 5643-2 | A556-025

Detroit Diesel Allison Division of General Motors · Indianapolis, Indiana

FORM 8202 S

MILLIMETRES TO INCHES

mm MIN/NOM	mm MAX	in. MIN/NOM	in. MAX
1.5000		0.05908	
2.6000	3.5000	0.10236	0.13780
9.0000		0.35433	
9.5200		0.37480	
10.3200		0.40630	
25.4000		1.00000	
26.5200		1.04409	
38.1000		1.50000	
64.4000		2.53543	
70.9000		2.79134	
71.9400	71.9500	2.83228	2.83268
71.9900	72.0000	2.83425	2.83465
82.6800	86.3400	3.25512	3.42284
82.7700	85.3900	3.25866	3.36181
98.4400		3.87559	
102.6400		4.04095	
119.3800		4.70000	
128.4100		5.05551	
201.4700		7.93189	
370.3000		14.57874	
406.4000		16.00000	
423.8200		16.68583	
435.4000		17.14174	
446.0000		17.55906	

METRIC VALUE	EQUIVALENT
34-41 N·m	25-30 LB FT

AS56-025

Allison Transmissions

SHEET 2

FLEX PLATE INPUT DRIVE DATA

CRT 5643-2 AS56-025

METRIC VALUES	EQUIVALENTS
-40°C TO +135°C	-40°F TO +275°F
135°C	275°F
19 AND 22 LITRE/S	30 AND 35 GPM
34 kPa	5 PSI
83 kPa	12 PSI
83-103 kPa	12-15 PSI
103-210 kPa	15-30 PSI
138-172 kPa	20-25 PSI
241 kPa	35 PSI
276 kPa	40 PSI
448 kPa	65 PSI
896-965 kPa	130-140 PSI
1793 kPa	260 PSI

REFERENCE DRAWINGS FOR OPTIONS AND SPECIFICATIONS

A500-051 COOLER FLOW DATA

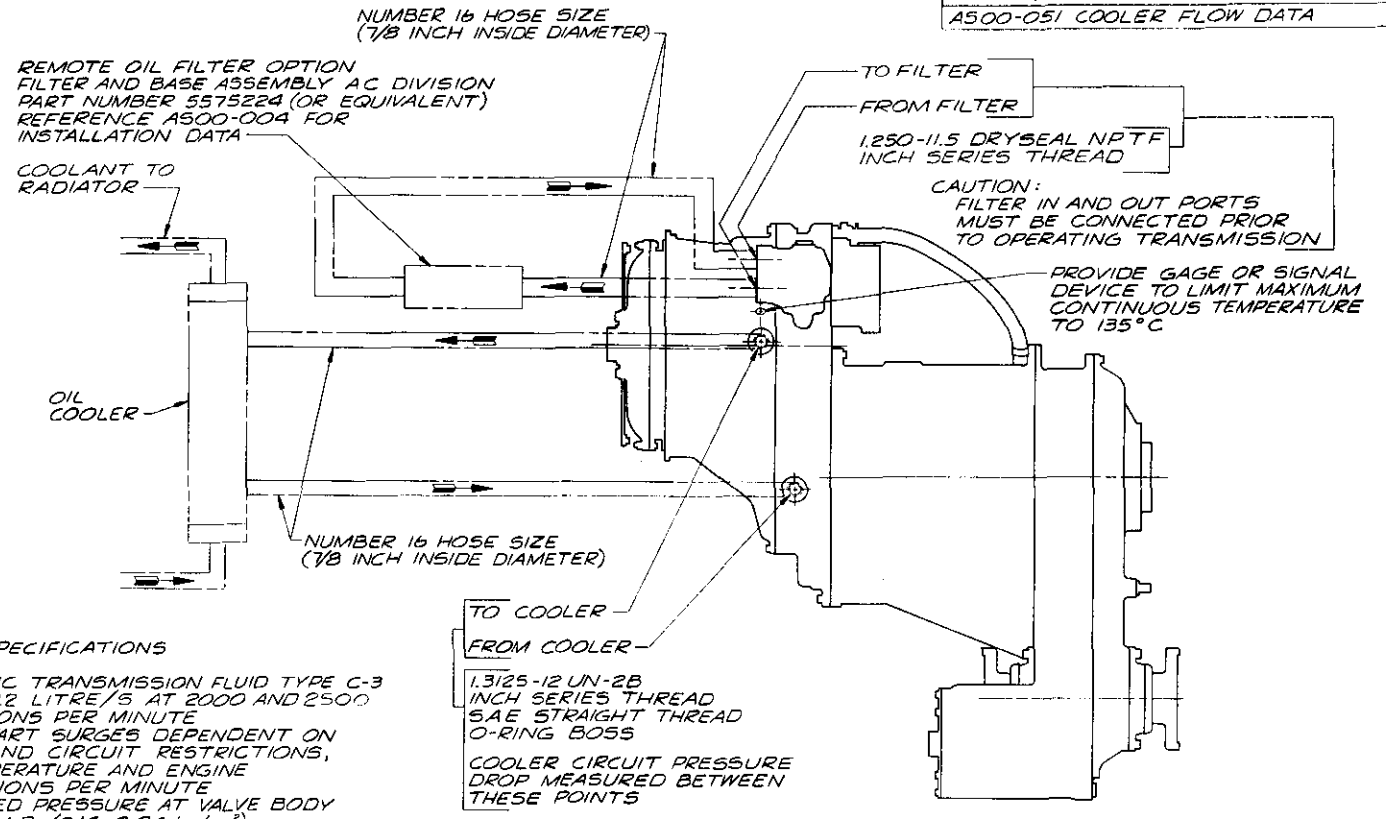

REMOTE OIL FILTER - GENERAL SPECIFICATIONS

TYPE OF FLUID	HYDRAULIC TRANSMISSION FLUID TYPE C-3
MAXIMUM OIL FLOW	19 AND 22 LITRE/S AT 2000 AND 2500 REVOLUTIONS PER MINUTE
OPERATING OIL PRESSURE	COLD START SURGES DEPENDENT ON FILTER AND CIRCUIT RESTRICTIONS, OIL TEMPERATURE AND ENGINE REVOLUTIONS PER MINUTE REGULATED PRESSURE AT VALVE BODY 896-965 kPa (9.14-9.84 kg/cm²)
OPERATING OIL TEMPERATURE	135°C MAXIMUM CONTINUOUS
OIL PRESSURE DROP:	
INITIAL (CLEAN ELEMENT)	34 kPa (0.35 kg/cm²) MAXIMUM
MAXIMUM PRIOR TO SERVICING	83 kPa (0.84 kg/cm²)
BY-PASS VALVE INCORPORATED	IN FILTER ASSEMBLY
INITIAL BY-PASS PRESSURE	83-103 kPa (0.84-1.05 kg/cm²)
FULL BY-PASS PRESSURE	138-172 kPa (1.41-1.76 kg/cm²)
DEGREE OF FILTRATION	44 MICRONS MAXIMUM
INTERVAL BETWEEN SERVICING	500-1000 HOURS (DESIRABLE)

TYPE OF CONTAMINATE:
EARTH, IRON, STEEL, BRONZE, COPPER AND ALUMINUM PARTICLES, ROCK, COAL AND CEMENT DUST

METHOD OF INSTALLATION:
INDEPENDENT MOUNTED WITH .750-14 NPTF INCH SERIES THREAD MINIMUM PIPE TAP CONNECTIONS

RECOMMENDED FILTER LOCATION EQUAL TO OR BELOW THE OIL RETURN PORT

FILTER CIRCUIT SPECIFICATIONS:
AT OPERATING TEMPERATURE AND MAXIMUM ENGINE SPEED
1. MAXIMUM ALLOWABLE EXTERNAL CIRCUIT PRESSURE DROP 241 kPa (2.46 kg/cm²)
2. MAXIMUM ALLOWABLE PUMP OUTPUT PRESSURE 1793 kPa (18.28 kg/cm²)

A556-026

PARTS SHOWN IN PHANTOM ARE CUSTOMER FURNISHED

COOLER CIRCUIT PRESSURE SPECIFICATIONS
(ALL PRESSURES MEASURED AT TRANSMISSION CONNECTION)

1. AT OPERATING TEMPERATURE AND MAXIMUM SPEED, HIGH RANGE:
   MAXIMUM ALLOWABLE CONVERTER OUT OIL PRESSURE 448 kPa (4.57 kg/cm²)
   MAXIMUM ALLOWABLE EXTERNAL CIRCUIT PRESSURE DROP 276 kPa (2.81 kg/cm²)
2. AT OPERATING TEMPERATURE AND FULL THROTTLE STALL, MINIMUM ALLOWABLE CONVERTER OUT OIL PRESSURE 276 kPa (2.81 kg/cm²). CUSTOMER TO INSTALL RESTRICTION IN COOLER RETURN LINE IF NECESSARY.
3. AT OPERATING TEMPERATURE AND FULL THROTTLE STALL, COOLER OUT OIL PRESSURE 103-210 kPa (1.05-2.11 kg/cm²)

REFERENCE:
1. FOR COOLER OIL FLOW DATA SEE DRAWING — A500-051
2. BASIC INSTALLATION DRAWING — A556-024
3. HOSE SPECIFICATION:
   SAE 100R EXCEPT OPERATING TEMPERATURE RANGE FROM -40°C TO +135°C

METRIC
ALL DIMENSIONS ARE IN MILLIMETRES, UNLESS OTHERWISE SPECIFIED

THIRD ANGLE PROJECTION

CHANGES: A 2-14-81 REVISED OIL FLOW

DRAWN D. NEW 4-21-80 SCALE 0.2 TIMES
CHECKED H.E.H. 7-21-80 PROJ. ENGR.
CHF DRAFTSMAN 7-21-80 APP. ENGR. M.R. FUCIASK 7-7-80

Allison Transmissions

TITLE EXTERNAL HYDRAULIC CIRCUIT REQUIREMENTS

MODEL CRT 5643-2 | A556-026

Detroit Diesel Allison Division of General Motors · Indianapolis, Indiana

FORM 8202 S

MILLIMETRES TO INCHES			
mm MIN/NOM	mm MAX	in. MIN/NOM	in. MAX
16.28 18.47	16.97	.641 .727	.668

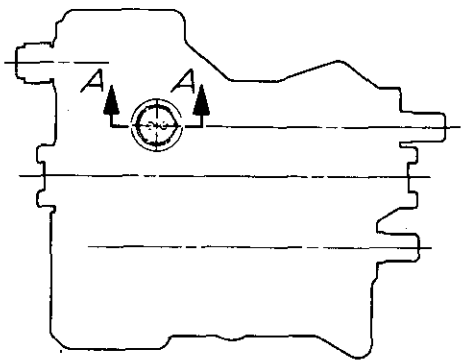

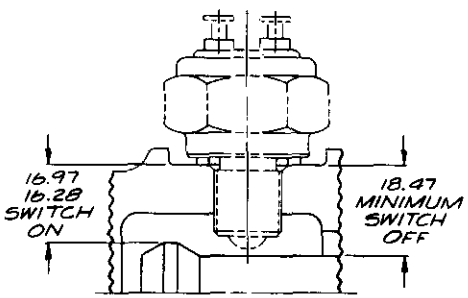

VIEW B
SCALE: 2/1

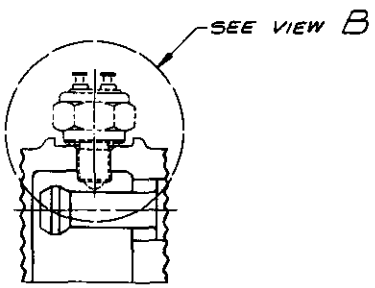

SECTION A-A
SCALE: 1/1

A556-028

FOR TRANSMISSION INSTALLATION DATA NOT SHOWN SEE BASIC INSTALLATION DRAWING—A556-024

TRANSMISSION IS SHIPPED WITH A .562-18 UNF-2A INCH SERIES THREAD STEEL PLUG AND A WASHER SEALING THE VALVE BODY
IF THE NEUTRAL START PROVISION IS NOT USED NO FURTHER MODIFICATION TO THE TRANSMISSION IS REQUIRED IF THE NEUTRAL START PROVISION IS USED THE CUSTOMER MUST FURNISH THE SWITCH AND A SPACER IF REQUIRED

PARTS SHOWN IN PHANTOM ARE CUSTOMER FURNISHED

METRIC
ALL DIMENSIONS ARE IN MILLIMETRES, UNLESS OTHERWISE SPECIFIED

THIRD ANGLE PROJECTION

CHANGES

DRAWN	CHECKED	CHIEF DRAFTSMAN
G. NEW 6-27-80	N. C. R. 7-15-80	7-23-80
SCALE 1/2	PROJ. ENGR.	APPL. ENGR. M.B. POCIASK 7-3-80

Allison Transmissions

TITLE: NEUTRAL START SWITCH PROVISION

MODEL CPT5643-2 | A556-028

Detroit Diesel Allison Division of General Motors - Indianapolis, Indiana

FORM 8202-5

MILLIMETRES TO INCHES			
mm MIN/NOM	mm MAX	in. MIN/NOM	in. MAX
12.7		0.50	
27.6		1.09	
81.3		3.20	
94.0		3.70	
106.1		4.18	
115.5		4.55	
236.2		9.30	
243.8		9.60	
274.3		10.80	

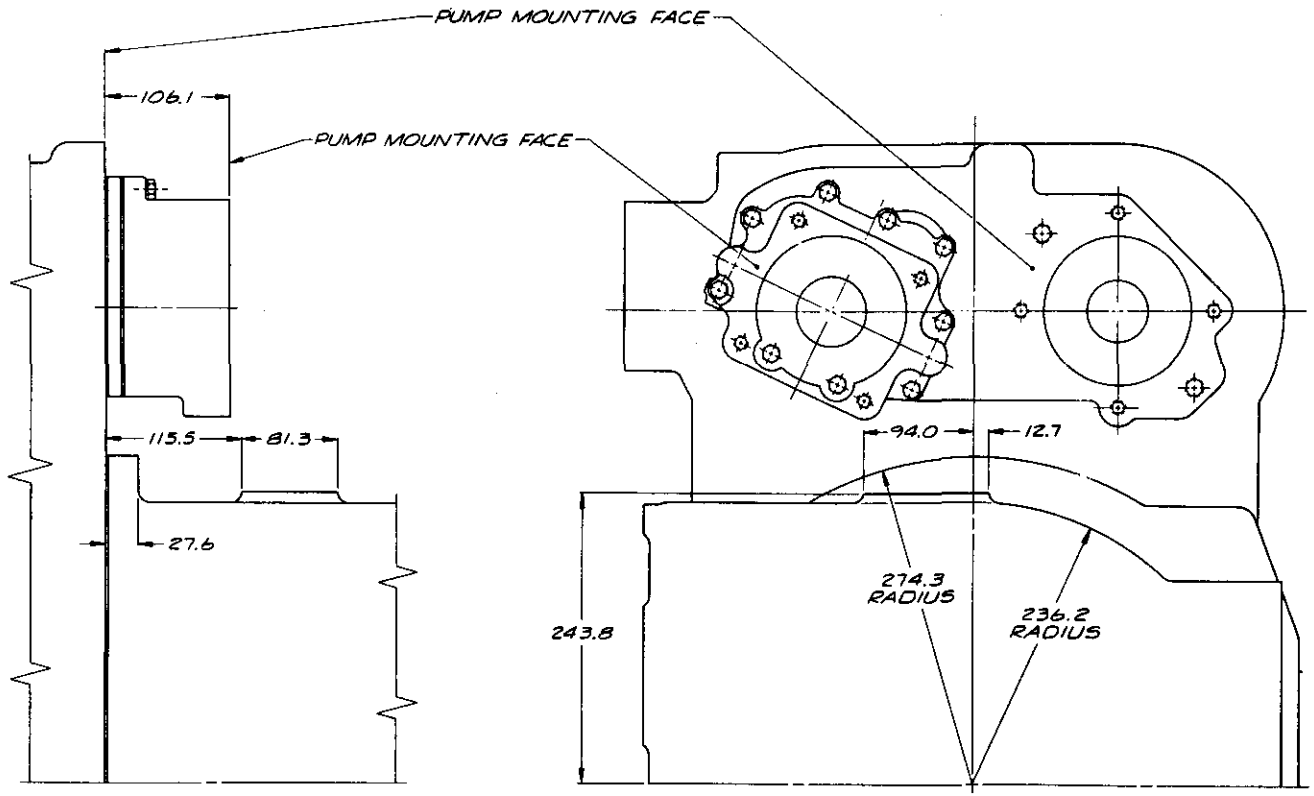

VIEW B-B ON BASIC INSTALLATION DRAWING—A556-024

A556-029

METRIC
ALL DIMENSIONS ARE IN MILLIMETRES, UNLESS OTHERWISE SPECIFIED

THIRD ANGLE PROJECTION

CHANGES

DRAWN	CHECKED	CAD DRAWING
D. NEW	D. MEYER	
28 AP 80	18 JN 80	20 JN 80
SCALE	PROJ. ENGR.	APPL. ENGR.
0.5 TIMES	M. PRICHARD	
	28 AP 80	

Allison Transmissions

TITLE: IMPLEMENT PUMP CLEARANCE INFORMATION

MODEL CRT 5643-2 | A556-029

Detroit Diesel Allison Division of General Motors · Indianapolis, Indiana

FORM 4702 5

MILLIMETRES TO INCHES			
mm MIN/MIN	mm MAX	in. MIN/MIN	in. MAX

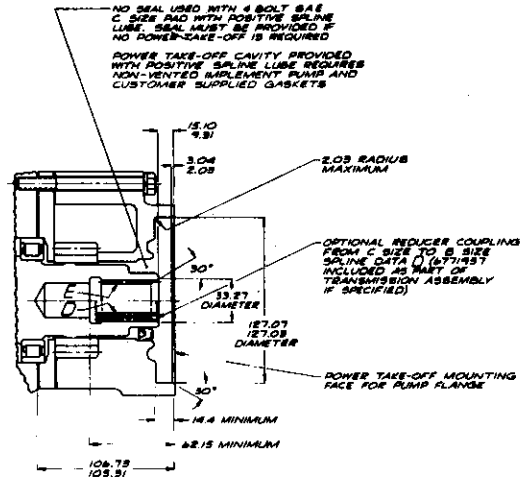

SECTION A-A
IMPLEMENT PUMP DRIVE
(SAE SIZE C MOUNTING FLANGE)
ENGINE DRIVEN POWER TAKE-OFF
DRIVE SPEED = ENGINE SPEED

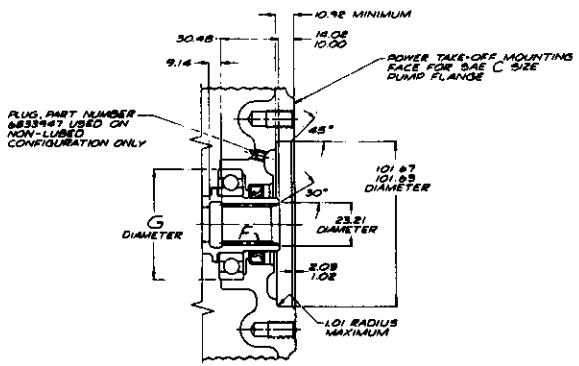

SECTION C-C
STEER PUMP DRIVE
(SAE SIZE C MOUNTING FLANGE)
ENGINE DRIVEN POWER TAKE-OFF
DRIVE SPEED = ENGINE SPEED

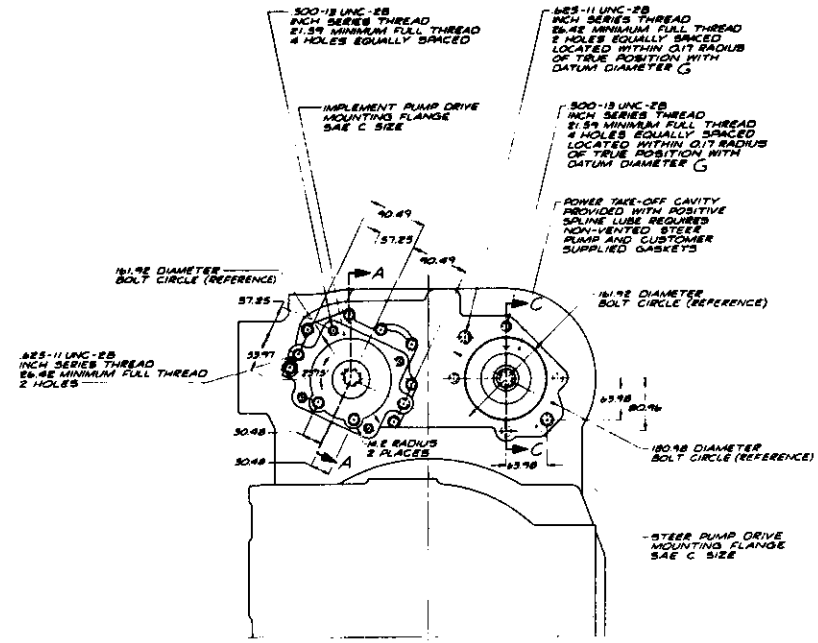

VIEW B-B ON BASIC INSTALLATION DRAWING – A556-024
SCALE: 0.5 TIMES

DIMENSIONS IN INCHES

INTERNAL SPLINE DATA D

16/32 PITCH	13 TEETH
30° PRESSURE ANGLE	
PITCH DIAMETER = .8125	INSIDE DIAMETER = .763-.768
ROOT DIAMETER = .904	TRUE INVOLUTE DIAMETER = .875

INTERNAL SPLINE DATA E

12/24 PITCH	14 TEETH
30° PRESSURE ANGLE	
PITCH DIAMETER = 1.1667	INSIDE DIAMETER = 1.083-1.088
ROOT DIAMETER = 1.271-1.284	TRUE INVOLUTE DIAMETER = 1.250

INTERNAL SPLINE DATA F
FLAT ROOT SIDE FIT

16/32 PITCH	13 TEETH
30° PRESSURE ANGLE	

IN ACCORDANCE WITH ANSI B92.1, CLASS 6

APPLY MOLY-COAT OR EQUIVALENT GREASE TO FULL SPLINE LENGTH OF COUPLING AND/OR SHAFT AT ASSEMBLY OF HYDRAULIC PUMP (SPLINES D, E AND F)

A556-030

METRIC
ALL DIMENSIONS ARE IN MILLIMETRES, UNLESS OTHERWISE SPECIFIED
THIRD ANGLE PROJECTION

Allison Transmissions

SAE SIZE C AND STEER PUMP DRIVE DATA
MODEL CPT 5643-2 | A556-030

FULL

FR1 A556-030

FR2

AB 58-000

FOR RETARDER MODELS THIS DIM. INCREASES, SEE BASIC INST DWG A558-029,031

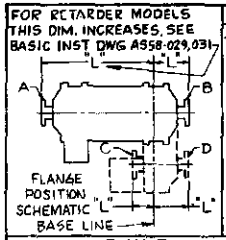

FLANGE DELINEATION CHART

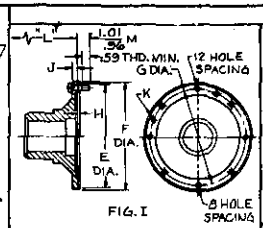

FIG. I

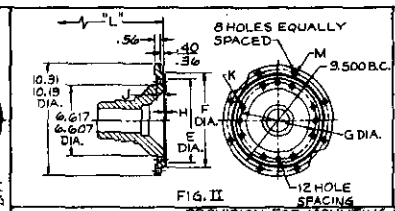

FIG. II

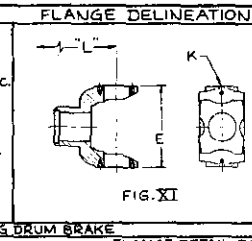

FIG. XI

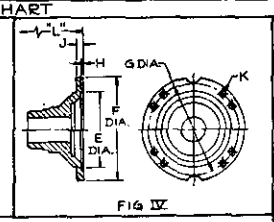

FIG IV

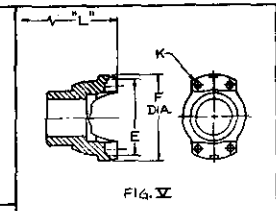

FIG. V

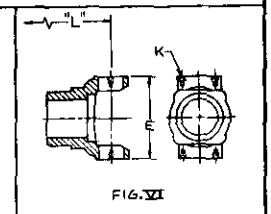

FIG. VI

PROVISION FOR MOUNTING DRUM BRAKE

POSITION	TYPE	SIZE	FIG. NO.	PART NO.	DETAIL NO.	"L" DIMENSION FOR MODEL & BASIC INSTALLATION (SEE NOTE) 5860 AS 58-031	5860 AS 58-029	5960 AS 58-031	5960 & 6061 AS 58-029	5630 AS 56-002	5631 AS 56-003	5643 AS 56-024				FLANGE DETAIL DIMENSIONS E	F	G	H	J	K FOR DRIVE LINE MOUNTING	M FOR PARKING BRAKE DRUM MOUNTING
A	SPICER	1700	I	6754103	6754103	41.56	41.52	—	—	—	—	—				7.750 7.752	8.01 7.99	7.250	.050 .060	.390 .370	.377 .379 DIA. 8 HOLES EQUALLY SPACED	
A	SPICER	1700	VI	6770785	6770785	41.15	41.11	—	—	—	—	—				6.038 6.091					3/8-24 THD.-.40 DEEP MIN.-4 HOLES	
A	SPICER	1800	I	6752520	6752520	41.56	41.52	41.56	41.52	—	—	—				7.750 7.752	8.01 7.99	7.250	.050 .060	.390 .370	.435 .441 DIA. 12 HOLES	
A	MECH.	8-C	VII	6769263	6769263	40.56	40.52	40.56	40.52	—	—	—				8.123 8.125	8.470			.562	.516 DIA. THRU 4 HOLES	
A	SPICER	1700	XI	6773140	6773140	—	—	—	—	34.08	34.55	—				6.093 6.091					3/8-24 THD.-.40 DEEP MIN.-4 HOLES	
A	SPICER	1850	V	6834885	6834885	42.54	42.50	42.54	42.50	—	—	—				8.093 8.091	8.80 8.69				9/16-18 THD.-.875 DEEP 4 HOLES	
A	MECH.	7-C	VII	6757603	6757603	—	—	—	—	32.96	33.43	—				5.842 5.844	6.25 6.22			.550 .550	.521 .541 DIA.-THRU 4 HOLES	
A	MECH.	9-C	VII	6774663	6774663	40.78	40.74	40.78	40.74	—	—	—				6.251 8.249	8.625			.625	.531 DIA-THRU 4 HOLES	
A	TWIN DISC	U230	VII	6830393	6830393	40.84	40.80	40.84	40.80	—	—	—				6.501 6.499	6.880			1.020 .980	1/2-20 THD-THRU 4 HOLES	

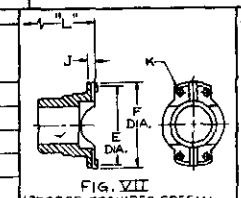

FIG. VII
6778892 REQUIRES SPECIAL BEARING RETAINER

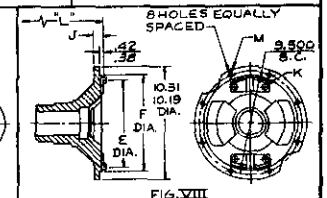

FIG. VIII

PROVISION FOR MOUNTING DRUM BRAKE

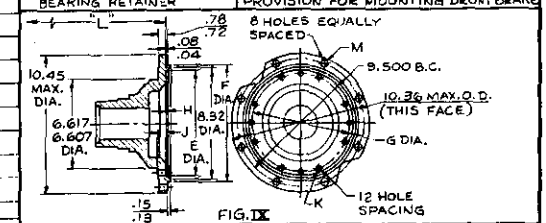

FIG. IX

PROVISION FOR MOUNTING DRUM BRAKE

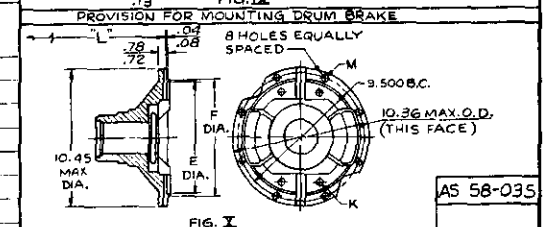

FIG. X

PROVISION FOR MOUNTING DRUM BRAKE

AS 58-035

TYPE	SIZE	FIG NO.	PART NO.	DETAIL NO.	5860 AS 58-031 POS. C	5860 AS 58-031 POS. D	5860 AS 58-029 POS. E	5960 AS 58-031 POS. C	5960 AS 58-031 POS. D	5960 6061 AS 58-029 POS. B	5630 - 5631 AS 56-002 AS 56-003 POS. C	5630 - 5631 AS 56-002 AS 56-003 POS. D	5643 AS 56-024 POS. C	5643 AS 56-024 POS. D	E	F	G	H	J	K FOR DRIVE LINE MOUNTING	M FOR PARKING BRAKE DRUM MOUNTING
MECH.	8 C	VII	6757572	6769412	***5.74	*12.02	—	***5.74	*12.02	—	***5.72	*12.02	—	—	8.123 8.125	8.51 8.49			6.35 6.15	.459 .479 DIA.-THRU 4 HOLES	
MECH	9-C	VII	23010230	23010226	—	—	—	—	—	—	—	—	4.96	11.22	8.247 8.251	8.500			1.00	1/2-20 THD-.85 DEEP MIN 4 HOLES	
MECH.	9-C	VII	6757633	6757623	*6.01	*12.30	—	***6.01	*12.30	—	***5.99	*12.30	—	—	8.249 8.251	8.65 8.59			6.55 6.15	.521 .541 DIA-THRU 4 HOLES	
MECH.	9-C	VIII	6769940	6769940	—	**15.16	—	—	***15.16	—	—	**15.16	—	—	8.249 8.251	8.687 8.685			.570 .530	1/2-20 THD.-.85 DEEP MIN. 4 HOLES	1/2-20 THD
MECH.	9-C	X	6772116	6772116	—	—	11.62	—	—	11.62	—	—	—	—	8.249 8.251	8.687 8.685				1/2-20 THD.-.85 DEEP MIN 4 HOLES	1/2-20 THD
MECH.	10-C	VII	6774667	6774666	*6.76	—	—	*6.76	—	—	—	—	—	—	8.374 8.379	8.875			.875	9/16-18 THD-THRU 4 HOLES	
SPICER	1800	IV	6769739	6769739	—	**15.14	—	—	**15.14	—	—	**15.14	—	—	7.750 7.752	8.687 8.685	7.250	.050 .060	.790 .730	.437 .441 DIA. 12 HOLES	1/2-20 THD.
SPICER	1800	IX	6772163	6772168	—	—	11.62	—	—	11.62	—	—	—	—	7.750 7.752	8.687 8.685	7.250	.050 .060	.790 .730	.437 .441 DIA 12 HOLES	1/2-20 THD.
SPICER	1850	IV	6770847	6770826	*6.20	*12.50	—	*6.20	*12.50	—	—	—	—	—	7.000 7.002	9.48 9.45	8.250	.125 .135	.630 .610	.627 .629 DIA. 8 HOLES	PARKING BRAKE MOUNTS BETWEEN FLANGE AND DRIVELINE
MECH.	8-C	VIII	6775916	6775916	—	**15.16	—	—	**15.16	—	—	**15.16	—	—	8.123 8.125	8.687 8.685			.990 .930	1/2-20 THD.-.85 DEEP MIN. 4 HOLES	1/2-20 THD.-THRU
MECH.	9-C	VII	6769388	6769387	***5.01	*12.30	—	***6.01	*12.30	—	***5.99	*12.30	—	—	8.249 8.251	8.65 8.59			.695 .615	1/2-20 THD.-THRU 4 HOLES	
MECH.	9-C	VII	6773397	6773396	—	—	10.25	—	—	10.25	—	—	—	—	8.249 8.251	8.500			.760	1/2-20 THD-THRU 4 HOLES	
SPICER	1850	IV	6774061	6774061	—	—	11.78	—	—	11.78	—	—	—	—	7.000 7.002	9.560 9.558	8.250	.125 .135	.930 .950	3/8-18 THD THRU 8 HOLES	PARKING BRAKE MOUNTS BETWEEN FLANGE AND DRIVELINE
SPICER	1850	I	6772136	6772135	—	—	11.78	—	—	11.78	—	—	—	—	7.000 7.002	9.560 9.558	8.250	.125 .135	.640 .610	3/8-18 BOLTS (.625-.628 OD)	
SPICER	1800	I	6768543	6755666	—	**11.21	10.19	—	—	10.19	—	**11.21	—	—	7.750 7.752	8.010 7.990	7.250	.050 .065	.390 .370	.439 .441 DIA THRU-12 HOLES	
MECH	10C	VII	6884088	6884087	***7.01	—	—	***7.01	—	—	—	—	—	—	8.374 8.379	8.875 8.875			1.02 .98	5/8-18 THD-4 HOLES	

NOTE: TWIN DISC J310 COMPONENTS ARE COMPATABLE WITH MECH. 9C-FLANGES

OUTPUT FLANGES FOR POS. C AND POS. D MAY BE INSTALLED ONLY AS INDICATED BY ASTERISKS REFERING TO NOTES BELOW FOR EACH POSITION

* SINGLE OUTPUT ** DOUBLE OUTPUT *** SINGLE OR DOUBLE OUTPUT **** TAPERED BEARING SINGLE OUTPUT ONLY

△ MAY BE USED WITH DISCONNECT

REV.				
M	11-14-61	ADD FLANGE 6884088 POS. C & D		
L	11-16-60	ADDED 23010230	HUGHES	
K	6-27-59	ADDED 6774666		
J	7-23-58	ADDED 5960 & 6061 FL	DAVIS	
H	3-27-58	SEE REV NOTICE		
G	4-5-57	SEE REV NOTICE		
F	4-26-56	SEE REV NOTICE		
E	8-7-57	SEE REV NOTICE		
D	6-28-56	SEE REV NOTICE		
C	12-20-55	ADD NOTE		
B	6-30-55	SEE REV NOTICE		
A	9-4-55	ADD FLANGES		

Allison TORQUATIC Drives

DRIVE FLANGE OPTION

DRAWN	CHECKED	ENGINEERING	
HUGHES	NIGGINS	RTS	
1-4-55	3-2-62	3-3-62	
SCALE NONE	WELCHER	BOWMAN	
	2-15-62	2-15-62	

MODEL SEE CHART | AS 58-035

AS 81-000

Revised & Redrawn - Ramsey, 10-2-64

Allison TORQMATIC Drives
INDIANAPOLIS, INDIANA

DATE	
12-15-61	AS-81-002
BY Ramsey	

TRANSMISSION ENGINEERING DEPARTMENT

COOLER OIL FLOW OF THE ALLISON TC-800 AND TC-900 SERIES TORQMATIC CONVERTERS

Oil Temperature ---------- 200°F.
Oil ---------- Hydraulic Transmission Fluid Type C-1

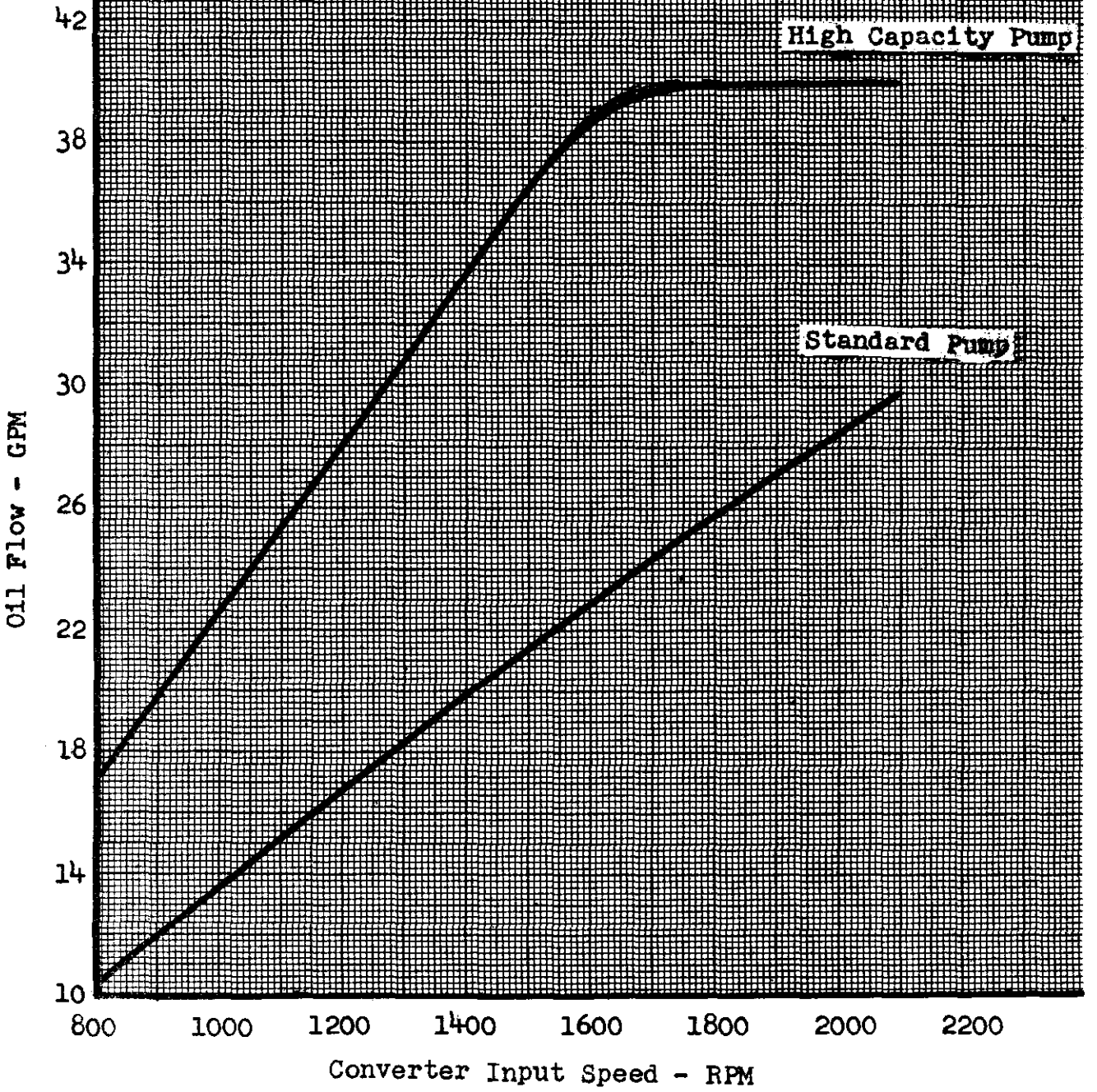

REFERENCE DRAWINGS FOR OPTIONS AND SPECIFICATIONS	
A3 00-015	CONVERTER DRIVE ADAPTATION
A3 00-008	RECOMMENDED SUPPORT CONSTRUCTION
A3 00-012	DRIVE FLANGE CHART
A3 81-003	HYDRAULIC DISCONNECT OPTION
A3 81-005	OVERCENTER FRONT DISCONNECT CLUTCH
A3 81-006	LOCK-UP CLUTCH OPTION
A3 81-007	SPROCKET LOAD CHART
A3 81-008	GOVERNOR DRIVE OPTION
A3 81-009	EXT. HYDRAULIC CIRCUIT REQ. (CONV. ONLY)

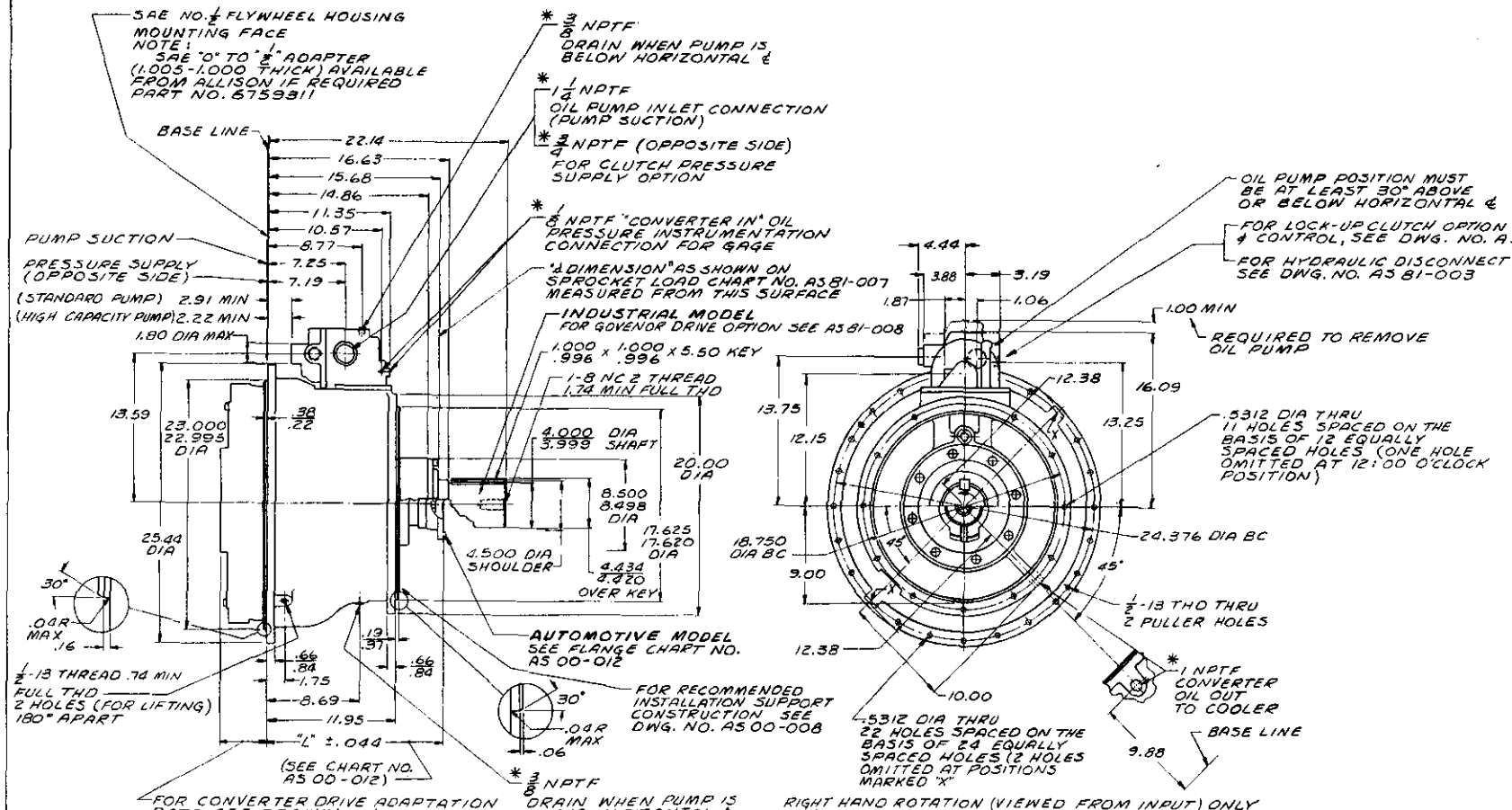

RIGHT HAND ROTATION (VIEWED FROM INPUT) ONLY
OPERATING OIL-HYDRAULIC TRANSMISSION FLUID TYPE "C-1"
* EXTERNAL SUMP REQUIREMENT - 10 GALLONS MINIMUM
* CONVERTER CHARGING PRESSURE 60 TO 90 PSI AT STALL (FULL THROTTLE) 120 PSI MAXIMUM
MAXIMUM CONVERTER OUT OIL TEMPERATURE 250°F
APPROXIMATE DRY WEIGHT =

AUTOMOTIVE MODEL	INDUSTRIAL MODEL
658 LBS	698 LBS

Allison Transmission Division

TITLE BASIC INSTALLATION DR

TC 800 & 900 SE

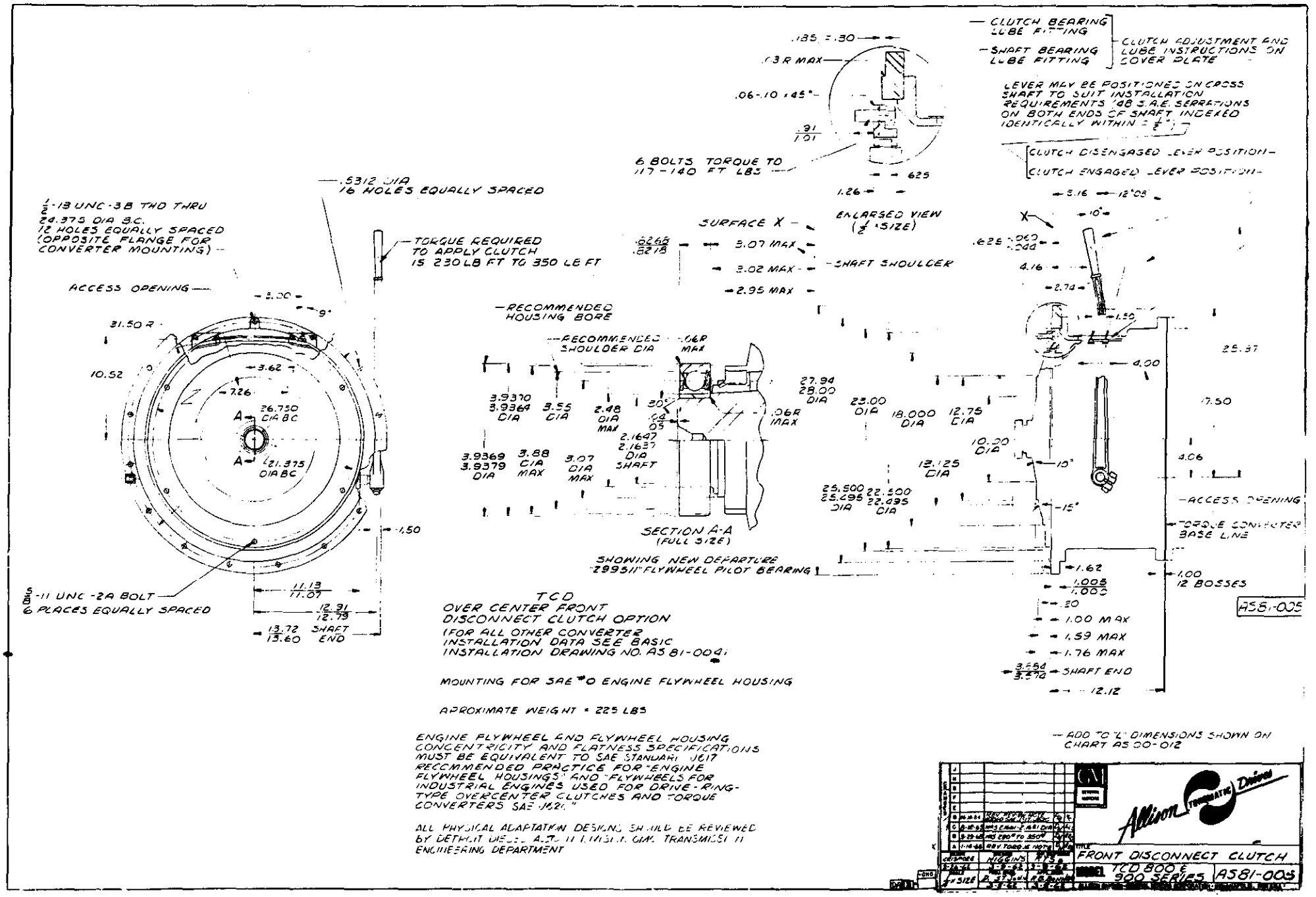
CLUTCH BEARING LUBE FITTING
SHAFT BEARING LUBE FITTING
CLUTCH ADJUSTMENT AND LUBE INSTRUCTIONS ON COVER PLATE
LEVER MAY BE POSITIONED ON CROSS SHAFT TO SUIT INSTALLATION REQUIREMENTS '48 S.A.E. SERRATIONS ON BOTH ENDS OF SHAFT INDEXED IDENTICALLY WITHIN ± 1/2°
CLUTCH DISENGAGED LEVER POSITION
CLUTCH ENGAGED LEVER POSITION
.185 ± .30
.13 R MAX
.06-.10 x 45°
.91 / 1.01
6 BOLTS TORQUE TO 117-140 FT LBS
.625
1.26
ENLARGED VIEW (1/2 SIZE)
.5312 DIA 16 HOLES EQUALLY SPACED
1/2-13 UNC-3B THD THRU
24.375 DIA B.C.
12 HOLES EQUALLY SPACED (OPPOSITE FLANGE FOR CONVERTER MOUNTING)
TORQUE REQUIRED TO APPLY CLUTCH IS 230 LB FT TO 350 LB FT
ACCESS OPENING
3.00
9°
31.50 R
10.52
3.62
7.26
26.750 DIA BC
21.375 DIA BC
1.50
5/8-11 UNC-2A BOLT 6 PLACES EQUALLY SPACED
11.13 / 11.07
12.91 / 12.79
13.72 / 13.60 SHAFT END
SURFACE X
.6268 / .6278
3.07 MAX
3.02 MAX
2.95 MAX
SHAFT SHOULDER
RECOMMENDED HOUSING BORE
RECOMMENDED SHOULDER DIA
.06R MAX
3.9370 / 3.9369 DIA
3.55 DIA
2.48 DIA MAX
30°
.04 / .05
2.1647 / 2.1637 DIA SHAFT
3.9369 / 3.9379 DIA
3.88 DIA MAX
3.07 DIA MAX
SECTION A-A (FULL SIZE)
SHOWING NEW DEPARTURE "29951" FLYWHEEL PILOT BEARING
27.94 / 28.00 DIA
23.00 DIA
18.000 DIA
12.75 DIA
10.20 DIA
12.125 DIA
25.500 / 25.295 DIA
22.500 / 22.495 DIA
10°
15°
3.16
12°08'
10°
.625 .060 / .040
4.16
2.74
1.50
4.00
25.37
7.50
4.06
ACCESS OPENING
TORQUE CONVERTER BASE LINE
1.62
1.00 / 1.005
12 BOSSES
.20
1.00 MAX
1.59 MAX
1.76 MAX
3.590 / 3.570 SHAFT END
12.12
A581-005
TCD
OVER CENTER FRONT
DISCONNECT CLUTCH OPTION
(FOR ALL OTHER CONVERTER INSTALLATION DATA SEE BASIC INSTALLATION DRAWING NO. AS 81-004)
MOUNTING FOR SAE #0 ENGINE FLYWHEEL HOUSING
APPROXIMATE WEIGHT = 225 LBS
ENGINE FLYWHEEL AND FLYWHEEL HOUSING CONCENTRICITY AND FLATNESS SPECIFICATIONS MUST BE EQUIVALENT TO SAE STANDARD J617 RECOMMENDED PRACTICE FOR "ENGINE FLYWHEEL HOUSINGS" AND "FLYWHEELS FOR INDUSTRIAL ENGINES USED FOR DRIVE-RING-TYPE OVERCENTER CLUTCHES AND TORQUE CONVERTERS SAE J620."
ALL PHYSICAL ADAPTATION DESIGNS SHOULD BE REVIEWED BY DETROIT DIESEL ALLISON DIV. GMC TRANSMISSION ENGINEERING DEPARTMENT
— ADD TO "L" DIMENSIONS SHOWN ON CHART AS 00-012
GM
Allison Automatic Drives
FRONT DISCONNECT CLUTCH
MODEL TCD 800 & 900 SERIES
A581-005

POWER TAKE-OFF SPROCKET CHART FOR TC-800 & 900 SERIES ALLISON CONVERTERS WITH HEAVY DUTY OUTPUT SHAFT

* (CHAIN DRIVE ONLY)

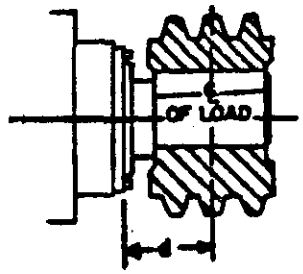

EXAMPLE:

DISTANCE FROM HOUSING TO ℄ OF LOAD = 6"
CONVERTER OUTPUT TORQUE @ 800 R.P.M. = 1,800 LB.FT.
THEN MIN. PITCH DIAMETER = 6.5"

d = DISTANCE FROM HOUSING TO ℄ OF LOAD IN INCHES. (DO NOT EXCEED 8 INCHES)

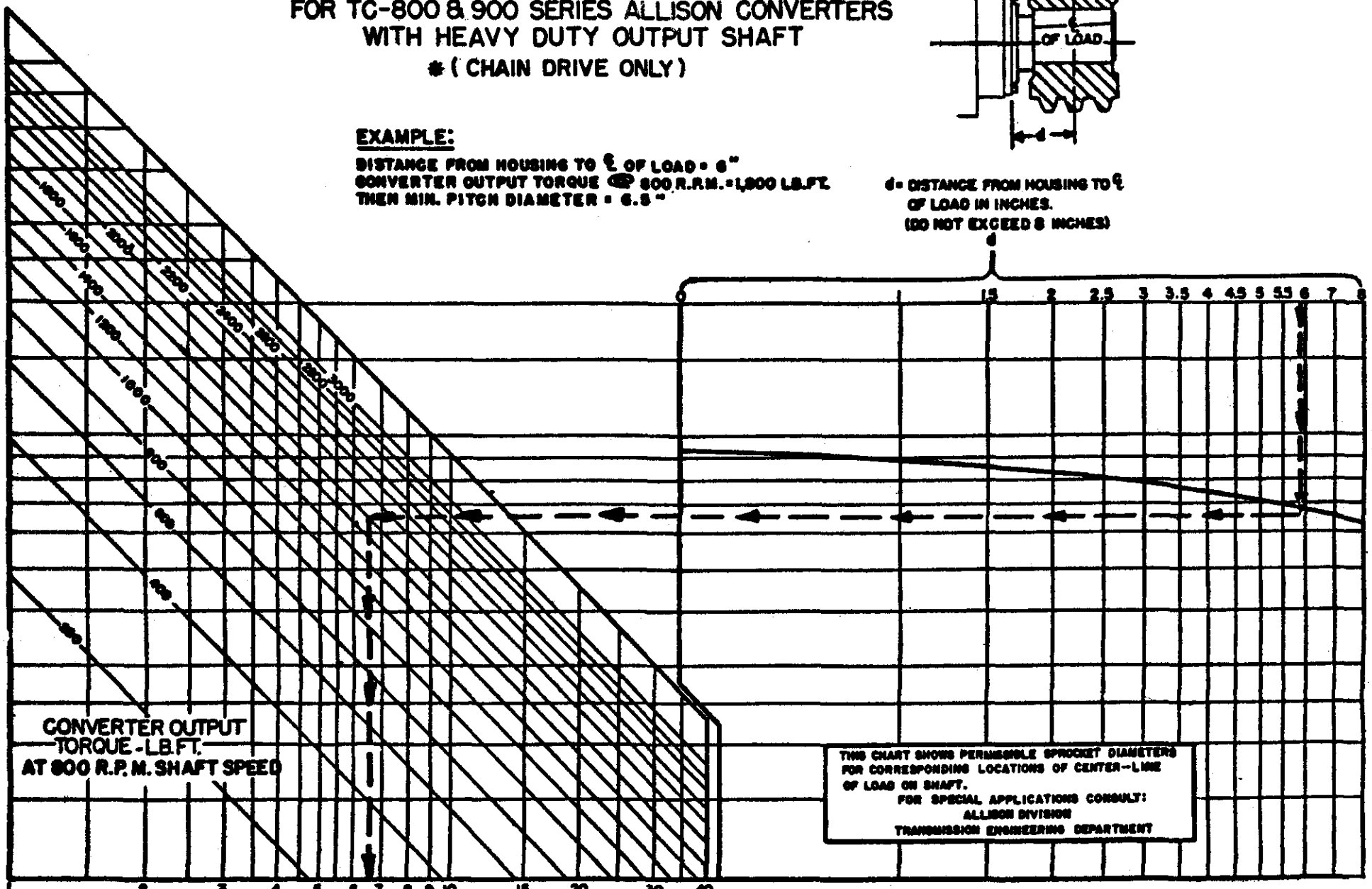

THIS CHART SHOWS PERMISSIBLE SPROCKET DIAMETERS FOR CORRESPONDING LOCATIONS OF CENTER-LINE OF LOAD ON SHAFT.
FOR SPECIAL APPLICATIONS CONSULT:
ALLISON DIVISION
TRANSMISSION ENGINEERING DEPARTMENT

* FOR V BELT DRIVE MIN. PULLEY P.D. EQUALS 1.5 TIMES MIN. SPROCKET P.D.

AS 81-007

REV. 10-18-62

ALLISON DIVISION GENERAL MOTORS CORPORATION — INDIANAPOLIS, INDIANA

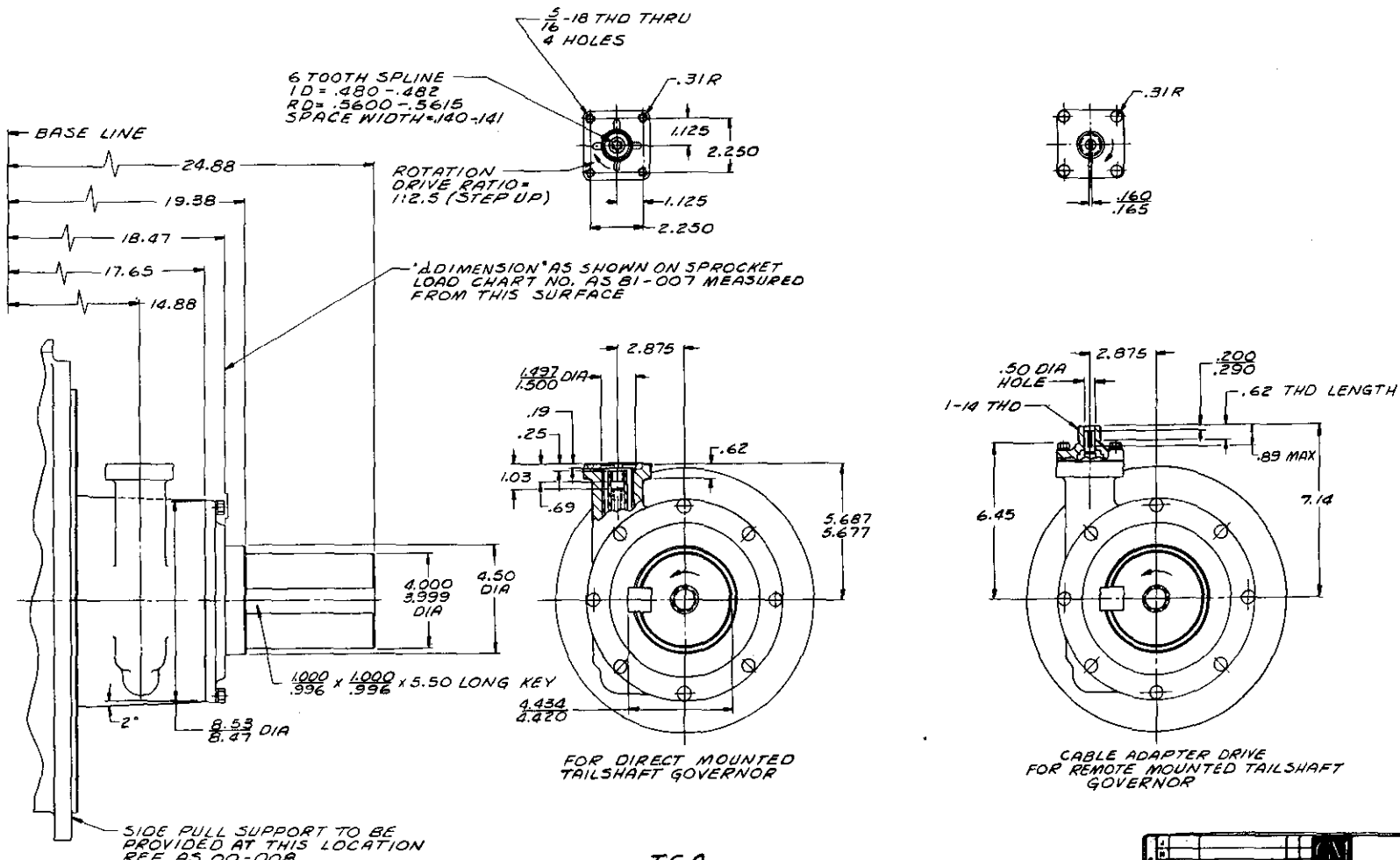

AS81-008

TCA

SPEEDOMETER OR
GOVERNOR DRIVE OPTION

(APPROX. ADDED WEIGHT = 27 LBS)
FOR ALL OTHER CONVERTER INSTALLATION DATA
SEE BASIC INSTALLATION DWG AS 81-004

Allison Division

TITLE GOVERNOR DRIVE OPTION

MODEL TC 800 & 900 AS81-008

ALLISON DIVISION
GENERAL MOTORS CORPORATION

"CONVERTER IN" PRESSURE TAPS 1/8 N.P.T.F.
PROVIDE PERMANENT PRESSURE GAGE.
OPERATING PRESSURE CONTROLLED BY COOLER CIRCUIT RESTRICTION (COOLER, FILTER, LINES, AND ORIFICE RESTRICTORS AS REQUIRED.)
PRESSURE SPECIFICATIONS:
(AT OPERATING TEMPERATURE 200°F TO 250°F)
60 TO 90 P.S.I. AT FULL THROTTLE STALL,
120 P.S.I. MAX. FULL THROTTLE NO LOAD (HIGH IDLE)

3/8 N.P.T.F.
SEAL DRAIN (WHEN PUMP IS BELOW HORIZONTAL ℄)

NOTE:
PUMP MUST BE LOCATED AT LEAST 30° ABOVE OR BELOW HORIZONTAL ℄

3/4 N.P.T.F. - FOR CLUTCH PRESSURE SUPPLY OPTION, 140 - 170 P.S.I.

1 1/4 N.P.T.F.

#16 MIN. HOSE SIZE (S.A.E. 7/8 I.D.)

FULL FLOW FILTER WITH SUITABLE BYPASS RECOMMENDED (A-C DIVISION PART NO. 5574784 OR EQUIVALENT)

PUMP SUCTION LINE.
#20 MIN. HOSE SIZE (S.A.E. 1 1/8 I.D.)
MAX. ALLOWABLE VACUUM 10" MERCURY AT PUMP INLET

FILTER

HEAT EXCHANGER

COOLANT FLOW

GENERAL COOLER RECOMMENDATIONS:
OIL TO WATER TYPE HEAT EXCHANGER RECOMMENDED.
CAPACITY TO PROVIDE CONTINUOUS COOLING WITH FOLLOWING CONDITIONS:
a) 250°F MAXIMUM OIL INLET (CONV. OUT) TEMPERATURE.
b) 70% CONVERTER EFFICIENCY WITH FULL ENGINE POWER (REF. TO SPECIFIC ENGINE - CONV. PERFORMANCE CURVE)

SEAL DRAIN LINE
(WHEN PUMP IS ABOVE HORIZONTAL ℄)
#8 MIN. HOSE SIZE (S.A.E. 13/32 I.D.)
FREE OF SHARP BENDS.
RETURN BELOW SUMP OIL LEVEL

1 N.P.T.F. - "CONV. OUT" 250°F MAX.
PROVIDE PERMANENT TEMPERATURE GAGE (REF. ALLISON PART NO. 6756665).

AS 81-009

HOSE SPECIFICATION:
S.A.E. 100 R5 EXCEPT OPERATING TEMPERATURE RANGE FROM -40°F. TO +275°F.

8.00 MIN.

3/8 N.P.T.F.

RETURN BELOW SUMP OIL LEVEL.

DIPSTICK OR OIL LEVEL CHECK PLUGS CHECK OIL LEVEL WITH ENGINE IDLING

AIR SPACE

BREATHER (ALLISON 6774565 OR EQUIVALENT IS REC'D.)

SUMP

10 GAL. MINIMUM

REF. AS 81-002 OR AS 81-010 FOR COOLER OIL FLOW INFORMATION AND AS 81-004 BASIC INSTALLATION DRAWING.

PARTS SHOWN IN PHANTOM ARE FURNISHED BY CUSTOMER

PUMP SUCTION SCREEN
REF. AS 00-013 FOR SPECIFICATIONS AND RECOMMENDATIONS.
MUST BE ACCESSIBLE FOR PERIODIC CLEANING

NOTE:
REQUIREMENTS SHOWN ARE FOR INDEPENDENT POWER UNIT CONVERTER INSTALLATIONS.

CHANGES			
J			
H			
G			
F			
E			
D			
C			
B	2-8-73	FILTER WAS 5574486	
A	2-10-65	ADD NOTE	

DRAWN	CHECKED	CHIEF DRAFTSMAN
HUGHES 9-25-62	K.L.H. 10-3-62	RTS 10-3-62
SCALE NONE	PROJ. ENGR. ST. JOHN 9-27-62	APPL. ENGR. WELCHER 9-28-62

DA-A

GM GENERAL MOTORS

Allison TORQMATIC Drives

TITLE: EXTERNAL HYDRAULIC CIRCUIT REQUIREMENTS

MODEL 800 & 900 SERIES TORQUE CONV.

AS 81-009

ALLISON DIVISION · GENERAL MOTORS CORPORATION · INDIANAPOLIS, INDIANA

Product Update Bulletins (PUB) have been designed to ensure that updated product information can be distributed as quickly as possible. Each PUB will refer back to specific item(s) in other sections, and will serve as interim updates during the period before an entire section requires revision. As sections are entirely updated, you will be instructed which PUB's may be discarded. A sample PUB format is attached. All data book recipients will automatically receive PUB's.

INDEX
PRODUCT UPDATE BULLETINS (PUBS)

PUB #	TITLE
35D	SCAAN Application Data Reference
60	Allison Converter Absorption Chart Summary
66	Shift Specification & Miscellaneous Data for Analysis of Torsional Data Tapes

Product Update Bulletin

Allison Transmissions

SCAAN APPLICATION DATA REFERENCE

PUB. NO. 35D

DATE October 1983

DETROIT DIESEL ALLISON DIVISION
GENERAL MOTORS CORPORATION
P. O. BOX 894
INDIANAPOLIS, INDIANA 46206
ATTENTION: SALES DEVELOPMENT J5

C-6-PB35D—01 3/84

SCAAN VOCATION DATA REFERENCE

This PUB is intended as a user's reference when operating SCAAN (System for Computerized Application ANalysis). It shows various users what results may be obtained and provides a reference for the computer's permanent data storage. This information aids the user in determining what configuration to run and what performance will be required from that configuration.

The user should realize that the data base described herein is continually updated based on new experience and/or new requirements. For this reason, it should be expected that it will not always agree with the current version of the SCAAN program. Please relay questions or suggestions to Technical Data, (Speed Code K9), Transmission Engineering.

This manual is divided into the following thirteen sections:

Section	Title	Page
1.	SCAAN Information Availability	3
2.	SCAAN Data Input Information	5
3.	Vocation Descriptions	6
4.	Transmission/Vocation Compatibility	7
5.	Engine-Permanent Library	12
6.	Engine-Enter Data from Terminal	26
7.	Engine-Accessory Deductions	28
8.	Transmission — Allison File Numbers	30
9.	Transmission — Mechanical File Numbers	34
10.	Converter Selection Guidelines	35
11.	Vehicle — Standard Factors	35
12.	Vehicle — Driveline Components	37
13.	Vehicle — Performance Guidelines	39

DISCLAIMER STATEMENT

The vehicle performance data is an estimate for the specified vehicle and power train based on the simulation of vehicle and power train components for certain conditions. Since vehicle or power train performance variations and operating conditions can cause actual vehicle performance to vary, General Motors Corporation (Detroit Diesel Allison Division) does not represent and hereby disclaims that, under all conditions, the actual vehicle will achieve the indicated performance.

1. **SCAAN INFORMATION AVAILABILITY**—Three basic output segments are available from the SCAAN program.

   A. **Application Information**

   This is the first page printed for each SCAAN run and includes input data specified by the user and applicable SCAAN Library file numbers. It itemizes, on a single sheet, the pertinent information used to generate the SCAAN analysis and performance data.

   B. **Summary (Application Analysis)**

   A SCAAN Application Summary is available for any configuration requested. This one-page summary provides a concise application analysis in terms of vocation compatibility, transmission rating and vehicle guidelines.

The chart below shows under what conditions SCAAN application summaries are available to the various Distributor, Regional, Sales, and Engineering users. Depending on the application's status, the title of the SCAAN summary may be "SCAAN Application Review, Questionable Application or Rejected Application". Moving from left to right, the column headings start with a completely acceptable application and then move toward progressively more severe violations.

	APPLICATION ANALYSIS					
	MEETS ALL APPLICATION RATINGS & GUIDELINES	DOES NOT MEET VEH. PERFORMANCE GUIDELINES (X)	NOT WITHIN ENGINE OR TRANS. PERF. GUIDELINES (XX)	QUESTIONABLE VOCATION (XX)	UNACCEPTABLE VOCATION (XXX)	EXCEEDS ENGINE OR TRANSMISSION RATINGS (XXX)
	SCAAN SUMMARY HEADING					
DISTRIBUTORS AND REGIONS	APPLICATION REVIEW		QUESTIONABLE APPLICATION		REJECTED APPLICATION	
SALES INTERNATIONAL DETROIT INDIANAPOLIS	APPLICATION REVIEW		QUESTIONABLE APPLICATION		REJECTED APPLICATION	
ENGINEERING INTERNATIONAL DETROIT INDIANAPOLIS	APPLICATION REVIEW		APPLICATION REVIEW		REJECTED APPLICATION	

C. **Performance Data**

The user is offered a selection of several types of performance data.

- Engine-converter match
- Transmission output performance
- Vehicle propulsion
- Vehicle acceleration
- Vehicle retardation

For most selections an abbreviated printout option is provided.

2. SCAAN DATA INPUT INFORMATION

① CUSTOMER NAME	② VEHICLE MANF + MODEL

③ VOC NO	④ ENGINE	⑤ TRANS	⑥ WT LBS	⑦ RAD R/MI

EITHER/OR

⑧ HEIGHT	⑨ WIDTH	⑩ DVL RAT	MAX MPH	⑪ ACC?

X FOR OUTPUT

⑫ SCAAN	VEH PER	BRAKING	MATCH	TRANS	WHL HP	ADAPTATION P/N

① Customer Name - Requires at Least 2 Different Char., 3 Char. Minimum

② Veh Manuf + Model - Requires at Least 4 Different Char., 5 Char. Minimum

③ Vocation Number
- o File No. (4 Digit)
- o Question Mark (?) Provides Complete Vocation List with File Nos.

④ Engine Description
- o File No. (5 or 6 Digits) Obtain from PIM 436
- o Eng. Manuf. & Model (i.e. DDA 6V53T or Cummins VT930)
- o Question Mark (?) Provides a List of Engines and File Nos.
- o Zero (0) or Blank, the Program Asks: SELECT ENG
  - 1- FROM A MANUFACTURER/MODEL LIST
  - 2- WANT A PARTICULAR POWER
  - 3- BY SCAAN ENGINE LIBRARY FILE
  - 4- BY SCAAN ENGINE LIBRARY FILE NO., BUT WITH MODIFIED GOV. RPM
  - 5- ENTER ENGINE DATA FROM TERMINAL
  - 6- USE ENGINE DATA FROM A PREVIOUS SCAAN HISTORY FILE RUN
  - 7- (WANT TO LIST DATA FOR A PARTICULAR ENGINE)
  - 8- (WANT AN APPROVED ENGINE LIST FOR A PARTICULAR TRANSM.)
  - 9- (WANT A LIST OF SCAAN ENGINE LIBRARY FILE NUMBERS)

⑤ Transmission Description
- o File No. (4 or 5 Digits) Obtain from PIM 436
- o Transmission Model (i.e. MT643, Mech 9 Spd. Mech RTO 910)
- o Question Mark (?) Provides a List of Transmissions Suitable to the Vocation Selected
- o Zero (0) or Blank the Problem Asks:
  - 1- HAVE SCAAN LIST TRANSM/CONVERTER COMBINATIONS APPROVED FOR YOUR VOCATION AND YOUR ENGINE
  - 2- WANT A PARTICULAR TRANSMISSION MODEL (OR FILE NO.)
  - 3- WANT AN APPROVED ENGINE LIST FOR A TRANSMISSION

⑥ Vehicle Weight (GVW or GCW)
- o Weight in Pounds (No Commas)
- o Zero (0) or Blank Signifies No Vehicle. Therefore Only Conv. Match or Trans. Output is Avail.

⑦ Rolling Radius for Tire, Sprocket, or Roller
- o Radius in inches (Must be Between 1 and 100)
- o Revolutions per Mile (Must be Greater than 100)
- o Question Mark (?) Offers Tire Table for Reference
- o R after Number Denotes Radial Tires

⑧⑨ Vehicle Height and Width (Feet)
- o Some Off-Highway Vehicles Ask for Frontal Area (Ft2)

⑩ Driveline (Select Only One)
- o Dvl Rat - Overall Driveline Reduction Ratio (Axle Ratio Multiplied by Auxiliary Gearing if Used)
- o Max Mph - Vehicle Mph Top Speed
- o If All Are Left Blank, SCAAN Asks:
  HOW DO YOU WANT TO SPECIFY DRIVELINE...
  - 1- BY INDIVIDUAL COMPONENT REDUCTION RATIOS
  - 2- BY OVERALL DRIVELINE REDUCTION RATIO
  - 3- BY SPECIFYING VEHICLE MPH TOP SPEED
  - 4- WANT DRIVELINE RATIO TO GIVE 0.25% GRADEABILITY AT 55 MPH
  - 5- BY SPECIFYING VEHCLE STALL GRADEABILITY OR TRACTIVE EFFORT
  - 6- BY SPECIFYING VEHCLE PERFORMANCE AT 70% CONVERTER EFFICIENCY

⑪ Vehicle Acceleration
- o An (x) Provides Acceleration on Level Grade
- o A (g) Permits User to Obtain Acceleration on a Grade. SCAAN Will Ask User to Specify Grade.

⑫ Available Output Data. Place (x) in Field if Data Req'd.
- o SCAAN - Application Review
- o Veh Per - Vehicle Performance (PRep-VPC) MPH, Eng. Spd., TE, Gradeability
- o Braking - Braking Performance Including Engine Friction and Retarders
- o Match - Engine and Torque Converter Match
- o Transm - Transmission Output Performance
- o Whl Hp - Wheel Horsepower Requirements (PRep-VPR)
- o Adaptation P/N - Adaptation Parts List

3. **VOCATION DESCRIPTIONS**—SCAAN has approximately 60 different vocations. Most refer to vehicles; however, some vocations are for stationary equipment. The descriptions are provided to assist the user in picking the correct vocation. Accurate vocation selection is essential since this determines what transmissions are available and what vehicle performance guidelines are required.

File No.

1010 Industrial Converter—torque converter only. Often used in oil field drilling equipment.

ON-HIGHWAY

2110 Short-Haul Tractor/Trailer—Configuration usually used for city and suburban deliveries.

2121 Eastern N.A. Line-Haul Tractor/Trailer—Configuration usually used for hauling between cities. Trailer can be van type, refrigerator, tanker, etc. Geographic breakdowns reflect different performance requirements for these locales.

2122 Western N.A. Line-Haul Tractor/Trailer—Configuration usually used for hauling between cities. Trailer can be van type, refrigerator, tanker, etc. Geographic breakdowns reflect different performance requirements for these locales.

2123 European Line-Haul Tractor/Trailer—Configuration usually used for hauling between cities. Trailer can be van type, refrigerator, tanker, etc. Geographic breakdowns reflect different performance requirements for these locales.

2130 Motor Home—Recreational vehicle with living accommodations.

2140 Intercity Bus—Bus (coach) operating between cities. Also referred to as a tourist coach or "Greyhound."

2150 Car Hauler—Tractor/trailer used to transport automobiles.

2160 One-Way Rental Truck—Rental truck often used in city, but must be capable of extended highway operation.

2210 School Bus—Bus used for transporting school children. Generally, only used in the U.S.

2221 Transit Coach (U.S.)—Typical U.S. city bus. Normally, a V-drive configuration. This vocation requires conformance with DOT spec.

2222 Multipurpose Coach (European)—Europe and most other areas of the world apart from the U.S. build the same chassis for all bus applications. Not normally a V-drive.

2230 Liquid Delivery—Straight truck used in urban and suburban areas for liquid deliveries such as lawn chemicals or fuel oil. Also airport refueller.

2240 Van Body—Straight truck with van body used for pickup and delivery.

2310 Trailer Spotter—Tractor used for moving trailers in a yard or loading railroad flatcars.

2320 Dock Spotter—Tractor used for loading and unloading trailers from ships. Frequently has specific gradeability requirements for ramps.

2400 Tow Tractor/Highway or Aircraft—Low speed on-highway tractor used for towing a variety of loads. Often used for aircraft towing or pushout.

2500 Baggage Tow Truck—Straight truck with van body used at airports to tow baggage. Also use this vocation for various other airport truck vocations such as for food service, portable stairway or conveyor.

2600 Special Snow Plow/Blower—Specialized truck used for snow removal. It should not be used for the public services dump truck (3111) with a snow plow attached.

2710 Fire Truck Pumper—Fire fighting vehicle equipped with pumping apparatus for extinguishing building fires. Requires transmission high range lockup controls. Use crash truck vocation (3900) for airport fire fighting.

2720 Fire Truck (Non-Pumping)—Any fire fighting vehicle not requiring pumping capability.

ON/OFF-HIGHWAY

3111 Dump Truck, Public Services—General Purpose dump truck used by cities and highway departments. May be equipped with snow plow. Limited off-highway operation.

3112 Dump Truck, On/Off-Highway—Dump truck designed for substantial off-highway operation.

3121 Transit Mix, Rear Discharge—Cement mixer and transporter.

3122 Transit Mix, Front Discharge—Cement mixer and transporter. Front or rear discharge determines performance requirements.

3130 Construction Material Truck—Vehicle is typified by a concrete block truck, but can haul other heavy building materials on the construction site.

3140 Mobile Backhoe—On/off highway straight truck with a hydraulic backhoe mounted on rear.

3211 Refuse Packer, On-Highway—This refuse packer operates on-highway only and never gets into a landfill. Usually used to pick up refuse and transfer to a satellite collection point.

3212 Refuse Packer, Conventional—Refuse packer, front or rear load, which collects refuse and makes fewer than five trips to a landfill per day.

3213 Refuse Packer, Roll-Off—Roll-off or semi-trailer which collects refuse from satellite collection points and takes it to the landfill. Vehicle is generally heavier than other refuse trucks and spends more time in the landfill.

3220 Farm Truck—Typical stake bed truck used for general purpose farm operations which includes off-road capability.

3310 Light Crane Carrier (up to 132,275 lbs.)—Vehicle up to 132,275 lbs. (60,000 kg) GVW which transports a large crane having its own powertrain. Use mobile crane vocation (5600) for cranes which are powered by the vehicle powertrain.

3320 Heavy Crane Carrier (above 132,275 lbs.)—Vehicle above 132,275 lbs. (60,000 kg) GVW which transports a large crane having its own powertrain. Use mobile crane vocation (5600) for cranes which are powered by the vehicle powertrain.

3400 Oil Field Servicing Rig—Straight truck which transports oil field equipment, notably a mobile drilling rig. Use (61009) vocation for drilling and pumping rig performance.

3510 Public Utility, Single Axle—On-highway utility truck often required to tow cable spools or telephone poles. Consider towed weight in performance calculations.

3520 Public Utility, Dual Axle—Utility truck with off-road capability, such as a cable stringer. Consider towed weight in performance calculations.

3530 Public Utility, All Wheel Drive—Utility truck intended for predominately off-highway use. This vocation is typified by use of all wheel drive, either 4 × 4 or 6 × 6 in vehicles such as telephone pole hole augers. If applicable, consider towed weight in performance calculations.

3600 Tractor Trailer, On/Off-Highway—General purpose tractor trailer typified by a log hauler.

3700 Heavy Equipment Transport—A 4 × 6 or 6 × 6 tractor used to pull a low boy trailer and its equipment.

3800 Straddler Carrier—Vehicle which straddles load, lifts and carries it forward or reverse with equal ease.

3900 Crash Truck—Airport fire fighting vehicle usually requiring pump and roll capability. This vocation requires conformance with government specifications.

OFF-HIGHWAY HAULING

4011 Pan Scraper—Scraper with single front engine and without elevator. Consult Application Engineering if twin powered pan scraper performance is required.

4014 Elevating Scraper—Scraper with single front engine and elevator mechanism. Performance is often required with and without elevator mechanism.

4020 Rear Dump—Off-highway rear dump truck typically found in mining operations.

4030 4 Whl DR Prime Mover/Tow Tractor—Off-highway tractor for towing heavy loads such as ore or salt.

4040 Underground Mine Haul—Vehicle for underground mining operations. Performance requirements determined by individual applications.

4050 Bottom Dump—Off-highway hauler which dumps load through bottom of vehicle. Normally, a tractor trailer configuration.

OFF-HIGHWAY CYCLING

5110 Wheel Loader—A 4 × 4 articulated vehicle with a hydraulic front bucket used for stockpiling, excavating, mining, etc.

5120 Loader, Backhoe—Tractor with rear mounted backhoe. Front loader bucket is generally used only to fill in ditch. 4 × 4 or 4 × 2, non-articulated.

5210 Fork Lift, Hard Surface—Tractor with front fork lift. 4 × 2 non-articulated. Normally equal speeds forward and reverse. Ballast weights may be required.

5220 Fork Lift, Rough Terrain—A 4 × 4 articulated vehicle with front fork lift mechanism.

5230 Log Handler—Vehicle similar to a rough terrain fork lift except that it uses grapples or other log handling device.

5240 Skidder—Articulated 4 × 4 vehicle used for skidding logs.

5310 Compactor, Sanitary Landfill—A 4 × 4 articulated loader chassis fitted with special wheels for compacting refuse.

5320 Compactor, Soil Compaction—Specialty 4 × 4 articulated vehicle using sheep's foot or similar compaction device.

5330 Roller, Drum/Rubber Tire—Vehicle used for final soil or other surface compaction.

5400 Wheeled Dozer—A 4 × 4 vehicle with dozer blade.

5500 Tracked Dozer—Crawler tractor with dozer blade.

5600 Mobile Crane, Rough Terrain—Vehicle which carries a hydraulic crane. Same powertrain operates crane as propels vehicle. Also called hydraulic or articulated crane.

SPECIALIZED EQUIPMENT

6100 Oil Field Pumping Unit—Pumping equipment requiring manual automatic controls. May or may not be mounted on a vehicle. Since this vocation is a powertrain, only transmission performance is available.

6200 Hoist/Winch—Examples are the lift mechanism on a crane carrier or an anchor winch on an off-shore drilling platform. Since this vocation is a powertrain, only transmission performance is available.

6300 Auger—Powertrain for an earth drill which itself may be mounted on a variety of vehicles. Since its vocation is a powertrain, only transmission performance is available.

6400 Locomotive Rail Equipment—Freightyard switching, rail repair equipment, or powered passenger rail care.

6500 Agricultural Tractor—Farm vehicle used to pull and/or operate mounted trailing implements.

6600 Agricultural Spreader/Sprayer—Farm vehicle used to broadcast dry chemicals or spray liquid chemicals.

6700 Agricultural Hauler—Farm vehicle used for hauling produce trailers.

4. **TRANSMISSION/VOCATION COMPATIBILITY**—Only certain transmissions are applicable to particular vocations. On the following pages, those vocations that are suitable are shown in the transmission/vocation matrix by an "a". If the matrix shows "c", then Sales, Regions, and Distributors may run this combination; however, Engineering review is required. A blank means that this combination is unacceptable.

a = Acceptable; (blank) = Not Acceptable;
c = Consider- DDA Transm. Engineering Review Required

Model: description	TA no.	1	2	2	2	2	2	2	2	2	2	2	2	2	2	2	2	2	3	3	3	3	3	3	3	3	3	3	3	3	3	3	3	4	4	4	4	4	4	5	5	5	5	5	5	5	5	5	5	5	6	6	6	6	6	6	6
		0	1	1	1	1	1	1	1	2	2	2	2	2	3	3	4	5	6	7	7	1	1	1	1	1	2	2	2	2	3	3	4	5	5	5	6	7	8	9	0	0	0	0	1	1	2	2	2	3	3	3	4	5	6	1	2	3	4	5	6	7
		1	2	2	2	3	4	5	6	1	2	3	4	1	2	0	0	0	1	2	1	1	2	3	4	1	1	1	2	1	2	0	1	2	3	4	5	1	2	1	2	3	4	1	2	3	0	0	0	0	0	1	1	2	3	4	5	6	7
		0	0	1	2	3	0	0	0	0	1	2	0	0	0	0	0	0	0	1	2	1	2	0	0	1	2	3	0	0	0	0	0	0	0	0	0	0	0	0	1	4	0	0	0	0	0	0	0	0	0	0	0	0	0	0	0	0	0
TC-350 TORQUE CONVERTER INDUSTRIAL	201x	a																																																			a	a	a	a			
TC-370 TORQUE CONVERTER INDUSTRIAL	202x	a																																																			a	a	a	a			
TC-400 TORQUE CONVERTER INDUSTRIAL	203x	a																																																			a	a	a	a			
TC-500 TORQUE CONVERTER INDUSTRIAL	204x	a																																																			a	a	a	a			
TC-800 TORQUE CONVERTER IND.	206x	a																																																			a	a	a	a			
TC-900 TORQUE CONV. (STD OIL PUMP) IND	208x	a																																																			a	a	a	a			
TC-900 TORQUE CONV. (LARGE OIL PUMP) IND.	209x	a																																																			a	a	a	a			
AT-542 DIESEL	511x		c			a	c		a	a	a	c		c	a	a	a		a	a	a	c	a	a	a	a	c			c			a			a				a	a	a										c			c			
AT-545 GASOLINE	512x		c			a	c		a	a	a	c		c	a	a	a		a	a	a	c	a	a	a	a	c			c			a			a				a	a	a										c			c			
AT-545 HI TORQUE (TRUCKS)	515x		c						c					c	c	c			c	c	c		c	c	c		c			c			c			c																					
AT-545 HI TORQUE (SCHOOL BUS,MOTORHOME,FIRETRUCK)	516x					a			a										a	a	a																																				
AT-543 GENERAL	551x		c			a	c		a	a	a	c		c	a	a	a	a	a	a	a	a	a	a	a	a	c			c			a			a				a	a	a										c			c			
MT-643 GENERAL	611x		a	c	c	a	c	c	c	a	a	a		c	a	a	a	a	a	a	a	a	a	a	a	a	a	a	a	a	a	a	a	a	a	a	a	a	a	a	c	c	c	c	c									c			c		a	c
MT-643 GENERAL(2-ND GEAR START)	612x						a	c		a	a			c																																													
MT-653 DR GENERAL	613x		c			c									a	a	a	a	c		a	a	a	a	a	a		a	a	a	a	a	a	a	a	a	a	a	a	a	a	c	c	c	c	c									c		c	c	c	a	c
MT-643 TRAILER SPOTTER	614x																a																																									
MT-653 DOCK SPOTTER	615x																	a																																								
MT-653 TRAILER SPOTTER	617x																a																																									
MT-643 STATIONARY EQUIPMENT	621x																																																						a	a	a			
MT-653 STATIONARY EQUIPMENT	624x																																																						a	a	a			
MT-643 AGRICULTURAL HAULER	631x																																																										a
MT-653 DR AGRICULTURAL HAULER	632x																																																										a
MT-643 FIRE TRUCK	641x																									a	a	a																															
MT-643 (2-ND GEAR START) FIRE TRUCK	642x																									a	a	a																															
MT-653 DR FIRE TRUCK	643x																									a	a	a																															
MT-643 TRANSIT COACH	651x												a																																													
MT-643 TRANSIT(COACH (2ND GEAR START)	652x												a																																													
MT-643 INTERCITY, SCHOOL, MOTOR HOME	653x						a	a	a			a		a																																												
MT-643 INTERCITY, SCHOOL, MOTOR HOME (2ND GR ST)	654x						a	a	a			a		a																																												
MT-644 GENERAL	711x		a	c	c	a	c	c	c	a	a	a		c	a	a	a	a	a	a	a	a	a	a	a	a	a	a	a	a	a	a	a	a	a	a	a	a	a	a	c	c	c	c	c									c			c		a	c
MT-644 GENERAL (2ND GEAR START)	712x						a	c	c		a	a		c																																													
MT-644 GENERAL (LU IN 3-4)	713x							c	c					c																																													
MT-644 GENERAL (2ND GEAR START,LU IN 3-4)	714x							c	c					c																																													
MT-644 TRANSIT COACH	715x												a																																													
MT-644 TRANSIT COACH(2-ND GEAR START)	716x												a																																													
MT-644 INTERCITY, SCHOOL, MOTOR HOME	717x						a	a	a			a		a																																												
MT-644 INTERCITY, SCHOOL, MOTOR HOME (2ND GR ST)	718x						a	a	a			a		a																																												
MT-644 EMERGENCY EQUIPMENT	719x																									a	a	a																															
MT-644 TRANSIT COACH (LU IN 3-4)	720x												a																																													
MT-644 TRANSIT COACH(2-ND GEAR START, LU IN 3-4)	721x												a																																													
MTB-644	723x		a	c	c	a	c	c	c	a	a	a		c	a	a	a	a	a	a	a	a	a	a	a	a	a	a	a	a	a	a	a	a	a	a	a	a	a	a	c	c	c	c	c									c			c		a	c
MTB-644(2ND GEAR START)	724x							c	c		a	a		c													a	a	a																															
MTB-644 TRANSIT COACH (LU IN 3-4)	725x												a																																													
MTB-644 TRANSIT COACH(2-ND GEAR START, LU IN 3-4)	726x												a																																													
MTB-644 INTERCITY, SCHOOL, MOTOR HOME	727x						a	a	a			a		a																																													
MTB-644 INTERCITY, SCHOOL, MOTOR HOME (2ND GR ST)	728x						a	a	a			a		a																																													
MT-654 CR AG. TRACTOR(2ND GR ST)	822x																																																								a	a	
MT-654 CR AG. HAULER (2ND GR ST)	823x																																																									a
MT-654 CR	831x		a	a	a	a	a	c	c	a	a	a		c	a	a	a	a	a	a	a	a	a	a	a	a	a	a	a	a	a	a	a	a	a	a	a	a	a	a				c									c	c	c	c	c	a	a	a
MT-654 CR (2-ND GEAR START)	832x		a	a	a	a	a	c	c	a	a	a		c	a	a	a	a	a	a	a	a	a	a	a	a	a	a	a	a	a	a	a	a	a	a	a	a	a	a				c									c	c	c	c	c	a	a	a
MT-654 CR TRANSIT COACH	833x												a																																													
MT-654 CR TRANSIT COACH (2-ND GEAR START)	834x												a																																													
MT-654 CR INTERCITY, SCHOOL, MOTOR HOME	835x						a	a	a			a		a																																													
MT-654 CR INTERCITY, SCHOOL, MOTOR HOME (2ND GR ST	836x						a	a	a			a		a																																													
MT-654 CR(4TH & 5TH LOCKUP ONLY)	837x		a	a	a	a	a	c	c	a	a	a		c	a	a	a	a	a	a	a	a	a	a	a	a	a	a	a	a	a	a	a	a	a	a	a	a	a	a				c									c	c	c	c	c	a	a	a
MT-654 CR STATIONARY EQUIPMENT	842x																																																										
MTB-654CR	851x							c	c		a	a		c			a	a	a																																								
MTB-654CR (2-ND GEAR START)	852x							c	c		a	a		c			a	a	a																																								
MTB-654CR TRANSIT COACH	853x												a																																													
MTB-654CR TRANSIT COACH(2-ND GEAR START)	854x												a																																													
MTB-654CR INTERCITY, SCHOOL, MOTOR HOME	855x						a	a	a			a		a																																												
MTB-654CR INTERCITY, SCHOOL, MOTOR HOME (2ND GR ST	856x						a	a	a			a		a																																												

+ + + + + V O C A T I O N S + + + + +

a = Acceptable; (blank) = Not Acceptable;
c = Consider- DDA Transm. Engineering Review Required

| Model, description | TA no. | 1 0 1 1 | 2 1 2 0 | 2 1 2 0 | 2 1 2 0 | 2 1 3 0 | 2 1 4 0 | 2 1 5 0 | 2 1 6 0 | 2 2 1 0 | 2 2 2 0 | 2 2 3 0 | 2 2 4 0 | 2 3 1 0 | 2 3 2 0 | 2 4 0 0 | 2 5 0 0 | 2 6 0 0 | 2 7 1 0 | 2 7 2 1 | 2 1 1 0 | 2 1 2 1 | 2 2 1 0 | 2 2 2 0 | 2 2 3 0 | 2 3 1 0 | 2 3 2 0 | 2 3 3 0 | 2 3 4 0 | 2 3 5 0 | 2 3 6 0 | 2 3 7 0 | 2 3 8 0 | 2 3 9 0 | 3 4 0 0 | 4 1 1 0 | 4 1 2 1 | 4 1 3 0 | 4 2 0 0 | 4 2 1 0 | 4 2 2 1 | 4 2 3 0 | 4 2 4 0 | 5 1 2 0 | 5 1 2 1 | 5 1 3 0 | 5 2 1 0 | 5 2 2 0 | 5 2 3 0 | 5 2 4 0 | 5 3 1 0 | 5 3 2 0 | 5 3 3 0 | 5 4 0 0 | 5 5 1 0 | 5 5 2 0 | 5 5 3 0 | 5 5 4 0 | 6 1 4 0 | 6 2 0 0 | 6 3 0 0 | 6 4 0 0 | 6 5 0 0 | 6 6 0 0 | 6 7 0 0 |
|---|---|---

+ + + + + V O C A T I O N S + + + + +

a = Acceptable; (blank) = Not Acceptable;
c = Consider- DDA Transm. Engineering Review Required

Model: description	TA no.	1	2	2	2	2	2	2	2	2	2	2	2	2	2	2	2	2	3	3	3	3	3	3	3	3	3	3	3	3	3	3	3	4	4	4	4	4	4	5	5	5	5	5	5	5	5	5	5	5	6	6	6	6	6	6	6
		0	1	1	1	1	1	1	1	2	2	2	2	3	3	4	5	6	7	7	1	1	1	1	2	2	2	3	3	4	5	5	5	6	7	8	9	0	0	0	0	1	1	2	2	2	3	3	4	5	6	1	2	3	4	5	6	7
		1	2	2	2	3	4	5	6	1	2	2	3	4	1	2	0	0	0	1	2	1	1	2	3	4	1	1	1	2	1	2	0	1	2	3	0	0	0	1	1	2	3	4	5	1	2	1	2	3	4	1	2	3	0	0	0	0
		0	0	1	2	3	0	0	0	0	1	2	0	0	0	0	0	0	0	1	2	1	2	0	0	1	2	3	0	0	0	0	0	0	0	0	0	1	4	0	0	0	0	0	0	0	0	0	0	0	0	0	0	0	0	0	0	0
TT-2221-1 GENERAL (2.662,.699)	2101												a	a		c																						c	a	a		a	a	a	a	c												
TT-2221-1 MATERIAL HANDLER (2.662,.699)	2103														a																			a							a														a			
TT-2221-1 HEAVY DUTY EQUIPMENT (2.662,.699)	2104																																				a									c		c										
TT-2421-1 GENERAL (2.662,.699)	2105												a	a		c																						c	a	a		a	a	a	a	c												
TT-2421-1 MATERIAL HANDLER (2.662,.699)	2107														a																			a							a														a			
TT-2421-1 HEAVY DUTY EQUIPMENT (2.662,.699)	2108																																				a									c		c										
TT-2221-1 GENERAL (2.153,.565)	2112												a	a	a	c																						c	a	a		a	a	a	a	c												
TT-2421-1 GENERAL (2.153,.565)	2116												a	a	a	c																						c	a	a		a	a	a	a	c												
TT-2221-1 GENERAL (3.902,1.024)	2122												a	a	a	c																						c	a	a		a	a	a	a	c												
TT-2421-1 GENERAL (3.902,1.024)	2126												a	a	a	c																						c	a	a		a	a	a	a	c												
TTR-2221-1 GENERAL (3.902,1.024)	2201																																							c			a	a	a												
TTR-2421-1 GENERAL (3.902,1.024)	2202																																							c			a	a	a												
TTR-2221-1 GENERAL (2.662,.699)	2251																																							c			a	a	a												
TTR-2421-1 GENERAL (2.662,.699)	2252																																							c			a	a	a												
TRT-2221-1 GENERAL (2.029,.736)	2301												a	a		c																						c	a	a	a	a	c	a			a	c	a	a	a	a					
TRT-2221-1 MATERIAL HANDLER (2.029,.736)	2303														a																			a							a														a			
TRT-2221-1 HEAVY DUTY EQUIPMENT (2.029,.736)	2304																																				a									a	a	c										
TRT-2421-1 GENERAL (2.029,.736)	2305												a	a		c																						c	a	a	a	a	c	a			a	c	a	a	a	a					
TRT-2421-1 MATERIAL HANDLER (2.029,.736)	2307														a																			a							a														a			
TRT-2421-1 HEAVY DUTY EQUIPMENT (2.029,.736)	2308																																				a									a	a	c										
TRT-2221-3 GENERAL (6.611,2.398)	2309												a	a		c																								a		a			a				a	c	a	a	a	a			
TRT-2221-3 MATERIAL HANDLER (6.611,2.398)	2312														a																			a							a														a			
TRT-2421-3 GENERAL (6.611,2.398)	2313												a	a		c																								a		a			a				a	c	a	a	a	a			
TRT-2421-3 MATERIAL HANDLER (6.611,2.398)	2315														a																			a							a														a			
TRT-2221-3 GENERAL (2.398,.826)	2317												a	a		c																								a		a			a				a	c	a	a	a	a			
TRT-2221-3 MATERIAL HANDLER (2.398,.826)	2319														a																			a							a														a			
TRT-2421-3 GENERAL (2.398,.826)	2321												a	a		c																								a		a			a				a	c	a	a	a	a			
TRT-2421-3 MATERIAL HANDLER (2.398,.826)	2323														a																			a							a														a			
TRT-2211-3 GENERAL (2.398)	2325												a	a																										a					a				a						a			
TRT-2211-3 MATERIAL HANDLER (2.398)	2326														a																			a							a														a			
TRT-2411-3 GENERAL (2.398)	2327												a	a																										a					a				a						a			
TRT-2411-3 MATERIAL HANDLER (2.398)	2328														a																			a							a														a			
TT-3420-1 GENERAL (2.516,.699)	2411												c	c	a	c																						a	a		a	a	a	a	c										c			
TT-3420-1 GENERAL (2.035,.565)	2412												c	c	a	c																						a	a		a	a	a	a	c										c			
TT-3420-1 GENERAL (2.982,.828)	2413												c	c	a	c																						a	a		a	a	a	a	c										c			
TT-3420-1 GENERAL (2.179,.565)	2414												c	c	a	c																						a	a		a	a	a	a	c										c			
TT-3420-1 GENERAL (3.192,.828)	2415												c	c	a	c																						a	a		a	a	a	a	c										c			
TT-3420-1 MATERIAL HANDLER (2.516,.699)	2431																																				c																		a			
TT-3420-1 MATERIAL HANDLER (2.035,.565)	2432																																				c																		a			
TT-3420-1 MATERIAL HANDLER (2.982,.828)	2433																																				c																		a			
TT-3420-1 MATERIAL HANDLER (2.179,.565)	2434																																				c																		a			
TT-3420-1 MATERIAL HANDLER (3.192,.828)	2435																																				c																		a			
TRT-3220-1 GENERAL (2.516,.913)	2461												c	c	a	c																						a	a		a	a	a	a	c										c			
TRT-3420-1 GENERAL (2.516,.913)	2481												c	c	a	c																						a	a		a	a	c	a	a										c	a		
TRT-3420-1 MATERIAL HANDLER (2.516,.913)	2483																																				c																		a			
TRT-3420-1 HEAVY DUTY EQUIPMENT (2.516,.913)	2484																																																							a	c		
TT-4721-1 GENERAL (2.710,.727)	2501												c	c	a	c																						a	a		a	a	a	a	c										c			
TT-4721-1 MATERIAL HANDLER (2.710,.727)	2503																																				c																		a			
TRT-4821-1 GENERAL (2.581,.692)	2601												c	c	a	c																						a	a		a	a	c	a	a										c	a		
TRT-4821-1 MATERIAL HANDLER (2.581,.692)	2603																																				c																		a			
TRT-4821-1 COMPACTOR (2.581,.692)	2604																																																									
TRT-4821-1 HEAVY DUTY EQUIPMENT (2.581,.692)	2605																																																							c			
TRT-4821-1 GENERAL (4.32,1.21)	2651												c	c	a	c																						a	a		a	a	a	c	c		a	c							c	a		

+ + + + + L O C A T I O N S + + + + +

a = Acceptable; (blank) = Not Acceptable;
c = Consider- DDA Transm. Engineering Review Required

| Model: description | DA no. | 0001 | 0002 | 0003 | 0004 | 0005 | 0006 | 0007 | 0008 | 0009 | 0010 | 0011 | 0012 | 0013 | 0014 | 0015 | 0016 | 0017 | 0018 | 0019 | 0020 | 0021 | 0022 | 0023 | 0024 | 0025 | 0026 | 0027 | 0028 | 0029 | 0030 | 0031 | 0032 | 0033 | 0034 | 0035 | 0036 | 0037 | 0038 | 0039 | 0040 | 0041 | 0042 | 0043 | 0044 | 0045 | 0046 | 0047 | 0048 | 0049 | 0050 | 0051 | 0052 | 0053 | 0054 | 0055 | 0056 | 0057 | 0058 | 0059 | 0060 | 0061 | 0062 | 0063 | 0064 | 0065 | 0066 | 0067 |
|---|---|---

5. **ENGINE—PERMANENT LIBRARY**—The listing below and on following pages show the engines which are stored in permanent data. Engines are listed by manufacturer and then alphanumeric order. California engines are grouped at the end of each manufacturer's list and nearly all engines include their calendar year (CY) of certification. All engines show gross and/or net horsepower at governed speed. In addition, each engine notes which vocations are suitable for it.

The user may specify a governed speed other than that contained in the library by adding the letter M to the basic library file number. All accessories are referenced to the normal (library) governed speed. The net curve is then interpolated or extrapolated to reflect performance with the modified governed speed.

```
  Applicable Vocations:
  =====================
1- ON HIGHWAY (all); ON-OFF HIGHWAY (all)
2- OFF-HIGHWAY HAUL (all); OFF HIGHWAY- CYCLING (all)
3- SPECIALIZED EQUIPMENT (all); INDUSTRIAL POWER PACKAGE (all)
4- INTERCITY BUS; TRANSIT COACH- U.S.;
    MULTIPURPOSE COACH- EUROPE
5- FIRE TRUCK- PUMPER; FIRE TRUCK- NON-PUMPER

A- ON-OFF HIGHWAY (all)
B- SPOTTING TRACTORS
C- TOW TRACTOR AIRCRAFT/HARD SURFACE
D- BAGGAGE TOW TRUCK
E- INDUSTRIAL POWER PACKAGE (all)
F- ON HIGHWAY (all)
G- SHORT HAUL TRACTOR/TRAILER
H- MOTOR HOME
J- TRUCK- ONE-WAY RENTAL
K- DUMP TRUCK
L- CONSTRUCTION MATERIAL TRUCK
M- PICKUP + DELIVERY- REFUSE + FARM
N- CRANE CARRIER
P- PUBLIC UTILITY
R- PICKUP+DEL- STRAIGHT TRUCK/BUS
S- FIRE TRUCK
T- LOADER-BACKHOE
U- FORK LIFT- HARD SURFACE
V- COMPACTOR-SANITARY LANDFILL
W- ROLLER- DRUM/RUBBER TIRE
X- HOIST/WINCH
Y- AGRICULTURAL SPREADER/SPRAYER
Z- WHEEL LOADER
a- AGRICULTURAL TRACTOR
b- CRASH TRUCK
c- MOBILE CRANE- ROUGH TERRAIN
d- INDUSTRIAL POWER PACKAGE
e- SPECIALIZED EQUIPMENT (all)

v- except TRACKED DOZER
u- except REFUSE PACKER-SEVERE LANDFILL
x- except SPECIAL SNOW PLOW/BLOWER
y- except MULTIPURPOSE COACH- EUROPE
z- except OVER-THE-ROAD
```

engine file number	model, descr	peak lb.ft	gross=g net=n hp	gov rpm	1	2	3	4	5	for vocations, see below
DETROIT DIESEL ALLISON:										
10001	3-53 40	186	84g	2800		*	*			A
10002	3-53 45	198	92g	2800		*	*			A
10003	3-53 50	205	98g	2800		*	*			A
10062	3-53T 60	302	125g	2500		*	*			A
10022	3-71 55	274	92g	2100		*	*			A
10023	3-71 60	287	99g	2100		*	*			A
10024	3-71 65	291	109g	2100		*	*			A
10025	3-71 70	298	115g	2100		*	*			A
10004	4-53 C40	251	114g	2800		*	*			AB
10007	4-53 C45	270	127g	2800		*	*			AB
10009	4-53 C50	282	136g	2800		*	*			AB
10063	4-53T 5A55 CY81,CY82,CY83	379	155g	2500	*	*	*			
10052	4-53T 5A60 CY81,CY82,CY83	402	170g	2500	*	*	*			
10124	4-53T 65	420	175g	2500		*	*			ACD
10005	4-71 55	370	130g	2100		*	*			A
10012	4-71 60	389	140g	2100		*	*			A
10014	4-71 65	407	155g	2100		*	*			A
10015	4-71 70	417	168g	2300		*	*			A
10369	4-71T N70	505	184g	2100		*				AE
10034	6-71 60	584	210g	2100		*	*			A
10105	6-71 7185 CY81,CY82,CY83	510	183g	2100	*	*	*			
10139	6-71 7E50 CY81,CY82,CY83	567	185g	2100	*	*	*			
10141	6-71 7E55 CY81,CY82,CY83	592	200g	2100	*	*	*			
10142	6-71 7E60 CY81,CY82,CY83	611	215g	2100	*	*	*			
10143	6-71 7E65 CY81,CY82,CY83	611	230g	2100	*	*	*			
10213	6-71 7E65 CY81,CY82,CY83	611	239g	2300					*	
10106	6-71 B55 CY81,CY82,CY83	550	197g	2100	*	*	*			
10107	6-71 B60 CY81,CY82,CY83	577	210g	2100	*	*	*			
10180	6-71 C70 1978	610	250g	2300	*	*	*			
10420	6-71 N65	611	230g	2100		*	*			A
10190	6-71T 65 1978	619	214g	2100	*	*	*			
10064	6-71T 70 1978	690	250g	2100	*	*	*			
10039	6-71T 75	772	272g	2100	*	*	*			
10155	6-71T 7C70 CY81,CY82,CY83	784	260g	2100	*	*	*			
10196	6-71T 7C75 CY81,CY82,CY83	801	275g	2100	*	*	*			
10154	6-71T N65 CY81,CY82,CY83	739	245g	2100	*	*	*			
10390	6-71TA 7C75 CY83	810	260g	1800	*	*	*			
10391	6-71TA 7C75 CY83	811	270g	1950	*	*	*			
10267	6-71TT 7E75 CY81,CY82,CY83	856	170g	1800	*	*	*			
10205	6-71TT 7E75 CY81,CY82,CY83	854	210g	1800	*	*	*			
10372	6-71TT 7E75 CY81,CY82,CY83	856	230g	1800	*	*	*			
10203	6-71TT 7E75 CY81,CY82,CY83	853	230g	1950	*	*	*			
10204	6-71TT 7E75 CY81,CY82,CY83	853	230g	2100	*	*	*			
10206	6-71TT 7E75 CY81,CY82,CY83	853	240g	2100	*	*	*			
10392	6-71TTA 7E75 CY83	841	170g	1800	*	*	*			
10393	6-71TTA 7E75 CY83	837	180g	1800	*	*	*			
10394	6-71TTA 7E75 CY83	840	210g	1800	*	*	*			
10395	6-71TTA 7E75 CY83	840	230g	1800	*	*	*			
10396	6-71TTA 7E75 CY83	842	230g	1950	*	*	*			

engine file number	model, descr	gross=g peak lb.ft	net=n hp	gov rpm	for vocations: see below 1	2	3	4	5
DETROIT DIESEL ALLISON:									
10397	6-71TTA 7E75 CY83	842	230g	2100	*	*	*		
10398	6-71TTA 7E75 CY83	844	240g	2100	*	*	*		
10414	6.2L CY83 G HEAVY DUTY	241	140n	3600	*	*	*		
10379	6.2L (LH6) CY82	240	125n	4000	*	*	*		
10380	6.2L (LL4) CY82	240	132n	4000	*	*	*		
10016	6V-53 C40 1978	385	171g	2800	*	*	*		
10021	6V-53 C50 1978	445	211g	2800	*	*	*		
10370	6V-53T 5A50 CY81,CY82,CY83	550	215g	2200	*	*	*		
10255	6V-53T 5A50 CY81,CY82,CY83	551	225g	2600	*	*	*		
10371	6V-53T 5A50 CY82,CY83	552	223g	2500	*	*	*		
10389	6V-53T 5A55 INDUSTRIAL	570	235g	2600	*	*	*		
10144	6V-71 7E50 NO.1, CY81,CY82,CY83	551	160g	2100				*	
10274	6V-71 7E50 NO.2, CY81,CY82,CY83	562	172g	2100				*	
10145	6V-71 7E55 NO.1, CY81,CY82,CY83	565	175g	2100				*	
10275	6V-71 7E55 NO.2, CY81,CY82,CY83	574	185g	2100				*	
10146	6V-71 7E60 NO.1, CY81,CY82,CY83	576	190g	2100				*	
10276	6V-71 7E60 NO.2, CY81,CY82,CY83	583	200g	2100				*	
10421	6V-71 C65	609	230g	2100		*	*		A
10415	6V-71 N55	556	195g	2100		*	*		A
10419	6V-71 N60	584	210g	2100		*	*		A
10422	6V-71TA 71N5 NO.1,CY82,CY83	555	177g	2100				*	
10425	6V-71TA 71N5 NO.2,CY82,CY83	595	192g	2100				*	
10423	6V-71TA N55 NO.1,CY82,CY83	577	186g	2100				*	
10426	6V-71TA N55 NO.2,CY82,CY83	619	200g	2100				*	
10424	6V-71TA N60 NO.1,CY82,CY83	635	206g	2100				*	
10427	6V-71TA N60 NO.2,CY82,CY83	671	220g	2100				*	
10076	6V-92 70 1978	680	240g	2100	*	*	*		
10077	6V-92 75 1978	709	257g	2100	*	*	*		
10078	6V-92 80	746	273g	2100	*	*	*		
10079	6V-92 85 1978	778	288g	2100	*	*	*		
10081	6V-92T 80 1978	795	280g	2100	*	*	*		
10055	6V-92T 80 1978	867	292g	2100	*	*	*		
10082	6V-92T 85 1978	840	300g	2100	*	*	*		
10056	6V-92T 85 1978	915	312g	2100	*	*	*		
10083	6V-92T 90 1978	891	322g	2100	*	*	*		
10084	6V-92T 90 1978	960	335g	2100	*	*	*		
10224	6V-92TA 70 CY81	763	265g	2100				*	
10242	6V-92TA 70 CY81	779	270g	2100	*	*	*		
10222	6V-92TA 70 NO.1, CY81	723	253g	2100				*	
10225	6V-92TA 75 CY81	805	277g	2100				*	
10243	6V-92TA 75 CY81	823	292g	2100	*	*	*		
10223	6V-92TA 75 NO.1, CY81	763	265g	2100				*	
10299	6V-92TA 7G65 NO.1,CY81,CY82,CY83	727	239g	2100				*	
10303	6V-92TA 7G65 NO.2,CY81,CY82,CY83	766	253g	2100				*	
10301	6V-92TA 7G70 NO.1,CY81,CY82,CY83	776	261g	2100				*	
10295	6V-92TA 7G70 NO.2,CY81,CY82,CY83	816	277g	2100				*	
10302	6V-92TA 7G75 NO.1,CY81,CY82,CY83	836	279g	2100				*	
10296	6V-92TA 7G75 NO.2,CY81,CY82,CY83	873	294g	2100				*	
10246	6V-92TA 80 CY81	849	290g	2100				*	

engine file number	model, descr	peak lb.ft	gross=g net=n hp	gov rpm	for vocations, see below 1	2	3	4	5
DETROIT DIESEL ALLISON:									
10174	6V-92TA 80 CY81	867	294g	2100	*	*	*		
10247	6V-92TA 80 NO.1,CY81	805	277g	2100				*	
10175	6V-92TA 85 CY81	910	315g	2100	*	*	*		
10176	6V-92TA 90 CY81	957	335g	2100	*	*	*		
10348	6V-92TA 9B80 CY81,CY82,CY83	862	286g	2100	*	*	*		
10349	6V-92TA 9B85 CY81,CY82,CY83	915	308g	2100	*	*	*		
10346	6V-92TA 9B90 CY81,CY82,CY83	963	307g	1800	*	*	*		
10350	6V-92TA 9B90 CY81,CY82,CY83	963	330g	2100	*	*	*		
10116	6V-92TAC 85 1978	870	300g	2100	*	*	*		
10117	6V-92TAC 90 1978	914	318g	2100	*	*	*		
10085	6V-92TT 90 1978	960	240g	1950	*	*	*		
10132	6V-92TT 90 1978	962	270g	1950	*	*	*		
10207	6V-92TTA 90 CY81	957	250g	1800	*	*	*		
10221	6V-92TTA 90 CY81	957	307g	1800	*	*	*		
10177	6V-92TTA 90 CY81	957	270g	1950	*	*	*		
10208	6V-92TTA 90 CY81	957	290g	1950	*	*	*		
10178	6V-92TTA 90 CY81	957	270g	2100	*	*	*		
10257	6V-92TTA 9B90 CY81,CY82	963	307g	1900	*	*	*		
10258	6V-92TTA 9B90 CY81,CY82	963	307g	2100	*	*	*		
10347	6V-92TTA 9B90 CY81,CY82,CY83	963	270g	1800	*	*	*		
10351	6V-92TTA 9B90 CY81,CY82,CY83	963	270g	2100	*	*	*		
10431	8.2 L 4A43	355	160g	2600		*	*		A
10418	8.2 L 4A53	355	165g	2800	*	*	*		
10430	8.2 L 4B45	330	140g	2600		*	*		A
10357	8.2 L N.A. 4A40 CY81,CY82,CY83	318	130g	2800					FGHJKLMNP WXYZ
10198	8.2 L N.A. 4A53 CY81,CY82,CY83	350	165g	3000					BDGHJKLMP RSWY
10308	8.2 L N.A. 4A53 CY81,82,83EXPORT	350	160g	2800					BDGHJKLMP RSWY
10400	8.2 L N.A. 4A53 CY83	355	165g	2800	*	*	*		
10361	8.2 L N.A. 4A53 INDUSTRIAL	350	160g	2800					CDTUVWXY
10399	8.2 L N.A. 4B45 CY83	330	145g	2800	*	*	*		
10417	8.2 L TURBO 4A53	375	160g	2800		*	*		A
10309	8.2 L TURBO 4A53 CY81,82,EXPORT	369	160g	2800					FGHJKLMNP WXYZ
10386	8.2 L TURBO 4A53 CY82,CY83	375	156g	2600					FGHJKLMNP WXYZ
10388	8.2 L TURBO 4A53 CY82,CY83	375	160g	2800					FGHJKLMNP WXYZ
10403	8.2 L TURBO 4A53 CY83	375	156g	2600	*	*	*		
10402	8.2 L TURBO 4A53 CY83	375	160g	2800	*	*	*		
10359	8.2 L TURBO 4A53 INDUSTRIAL	369	155g	2600					Z
10360	8.2 L TURBO 4A53 INDUSTRIAL	369	160g	2800					Z
10429	8.2 L TURBO 4C53	442	198g	2600		*	*		A
10428	8.2 L TURBO 4C53	442	205g	2800		*	*		A
10197	8.2 L TURBO 4C65 CY81,CY82,CY83	430	205g	3000					FGHJKLMNP WXYZ
10387	8.2 L TURBO 4C65 CY82,CY83	440	200g	2800					FGHJKLMNP WXYZ

engine file number	model, descr	peak lb.ft	gross=g net=n hp	gov rpm	for vocations, see below 1	2	3	4	5	
DETROIT DIESEL ALLISON:										
10405	8.2 L TURBO 4C65 CY83	443	205g	2800	*	*	*			
10358	8.2 L TURBO 4C65 INDUSTRIAL	430	200g	2800						CDTUVWXY
10075	8V-71 60 1978	778	280g	2100	*	*	*			
10300	8V-71 65 1978	811	305g	2100	*	*	*			
10310	8V-71 70 1978	826	335g	2300	*	*	*			
10150	8V-71 7E50 CY81,CY82,CY83	742	245g	2100	*	*	*			
10147	8V-71 7E50 NO.1, CY81,CY82,CY83	722	230g	2100				*		
10151	8V-71 7E55 CY81,CY82,CY83	766	265g	2100	*	*	*			
10148	8V-71 7E55 NO.1,CY81,CY82,CY83	748	250g	2100				*		
10152	8V-71 7E60 CY81,CY82,CY83	783	280g	2100	*	*	*			
10327	8V-71 7E60 CY81,CY82,CY83	780	287g	2300					*	
10149	8V-71 7E60 NO.1,CY81,CY82,CY83	771	270g	2100				*		
10153	8V-71 7E65 CY81,CY82,CY83	818	304g	2100	*	*	*			
10217	8V-71 7E65 CY81,CY82,CY83	818	316g	2300					*	
10074	8V-71 C55 1978	734	263g	2100	*	*	*			
10416	8V-71 N 55	741	265g	2100	*	*	*			
10072	8V-71T 75 1978	993	350g	2100	*	*	*			
10069	8V-71T C65 1978	911	308g	2100	*	*	*			
10071	8V-71T C70 1978	959	335g	2100	*	*	*			
10066	8V-71TA 7C70 CY81,CY82,CY83	1005	345g	2100	*	*	*			
10067	8V-71TA 7C75 CY81,CY82,CY83	1066	370g	2100	*	*	*			
10218	8V-71TA 7C75 CY81,CY82,CY83	1062	370g	2100					*	
10065	8V-71TA N65 CY81,CY82,CY83	943	318g	2100	*	*	*			
10411	8V-71TTA 7C75 CY81,CY82,CY83	1064	345g	1900	*	*	*			
10254	8V-71TTA 7C75 CY81,CY82,CY83	1064	345g	1900	*	*	*			
10161	8V-71TTA 7C75 CY81,CY82,CY83	1068	305g	1950	*	*	*			
10068	8V-71TTA 7C75 CY81,CY82,CY83	1068	305g	2100	*	*	*			
10412	8V-71TTA 7C75 CY81,CY82,CY83	1065	345g	2100	*	*	*			
10374	8V-71TTA 7C75 CY81,CY82,CY83	1064	345g	2100	*	*	*			
10111	8V-71TTAC 75 1978	1059	305g	1950	*	*	*			
10086	8V-92 70 1978	907	320g	2100	*	*	*			
10061	8V-92 75 1978	948	342g	2100	*	*	*			
10088	8V-92 80	996	364g	2100	*	*	*			
10089	8V-92 85 1978	1037	384g	2100	*	*	*			
10090	8V-92T 80 1978	1060	375g	2100	*	*	*			
10091	8V-92T 85 1978	1120	400g	2100	*	*	*			
10092	8V-92T 90	1187	430g	2100	*	*	*			
10433	8V-92T 9200	1316	492g	2300						b
10365	8V-92TA 7G75 CY81,CY82,CY83	1151	355g	1800	*	*	*			
10185	8V-92TA 80 CY81	1112	381g	2100	*	*	*			
10186	8V-92TA 85 CY81	1175	408g	2100	*	*	*			
10187	8V-92TA 90 CY81	1242	435g	2100	*	*	*			
10352	8V-92TA 9A80 CY81,CY82,CY83	1143	404g	2100	*	*	*			
10353	8V-92TA 9A85 CY81,CY82,CY83	1214	432g	2100	*	*	*			
10354	8V-92TA 9A90 CY81,CY82,CY83	1252	445g	2100	*	*	*			
10434	8V-92TA 9E65 CY82,CY83	1043	330g	2100				*		
10435	8V-92TA 9E70 CY82,CY83	1091	345g	2100				*		
10121	8V-92TAC 85 1978	1152	400g	2100	*	*	*			
10122	8V-92TAC 90 1978	1208	424g	2100	*	*	*			

engine file number	model, descr	peak lb.ft	gross=g net=n hp	gov rpm	for vocations, see below 1	2	3	4	5
DETROIT DIESEL ALLISON:									
10096	8V-92TT 90 1978	1223	335g	1800	*	*	*		
10133	8V-92TT 90 1978	1224	365g	1950	*	*	*		
10098	8V-92TTA 90 1978	1230	365g	1950	*	*	*		
10209	8V-92TTA 90 CY81	1242	335g	1800	*	*	*		
10188	8V-92TTA 90 CY81	1242	365g	1950	*	*	*		
10355	8V-92TTA 9A90 CY81,CY82,CY83	1251	365g	1950	*	*	*		
10189	8V-92TTA 9A90 CY81,CY82,CY83	1252	365g	2100	*	*	*		
10377	12V-149 130	2310	800g	1900		*	*		A
10331	12V-149T 150	3026	1050g	1900		*	*		A
10332	12V-149TI 195	3909	1350g	1900		*	*		A
10339	12V-149TI 170	3485	1200g	1900		*	*		A
10017	12V-71 70	1240	480g	2100		*	*		A
10830	12V-71 C50 1978	1020	367g	2100	*	*	*		
10850	12V-71 C55 1978	1110	395g	2100	*	*	*		
10870	12V-71 C60 1978	1174	425g	2100	*	*	*		
10099	12V-71 C65	1218	460g	2100	*	*	*		
10252	12V-71T 70	1381	500g	2100		*	*		A
10253	12V-71T 75	1450	525g	2100		*	*		A
10240	12V-71T 65	1379	485g	2100		*	*		A
10241	12V-71T 70	1463	525g	2100		*	*		A
10321	12V-71T N65	1376	484g	2100		*	*		A
10323	12V-71T N70	1467	524g	2100		*	*		A
10325	12V-71T N75	1533	553g	2100		*	*		A
10322	12V-71TT N65	1376	400g	2100		*	*		A
10324	12V-71TT N70	1468	450g	2100		*	*		A
10326	12V-71TT N75	1532	450g	2100		*	*		A
10212	12V-71TV 65 IND	1380	485g	2100		*	*		A
10211	12V-71TV 70 IND	1463	525g	2100		*	*		A
10018	12V-71TV 75 IND	1532	553g	2100		*	*		A
10337	12V-92 9270	1414	476g	2100		*	*		A
10336	12V-92 9275	1488	505g	2100		*	*		A
10335	12V-92 9280	1549	533g	2100		*	*		A
10334	12V-92 9285	1593	561g	2100		*	*		A
10328	12V-92T 9B80	1660	576g	2100		*	*		A
10329	12V-92T 9B85	1762	617g	2100		*	*		A
10330	12V-92T 9B90	1854	655g	2100		*	*		A
10378	16V-149 130	3080	1060g	1900		*	*		A
10383	16V-149T 130	3270	1100g	1900		*	*		A
10340	16V-149TI 150	4139	1400g	1900		*	*		A
10409	16V-149TI 160	4689	1600g	1900		*	*		A
10406	16V-149TI 160	4689	1655g	2050		*	*		A
10338	16V-149TI 170	4804	1600g	1900		*	*		A
10407	16V-149TI 190	5292	1800g	1900		*	*		A
10333	16V-149TI 195	5177	1800g	1900		*	*		A
10026	16V-71 55	1480	530g	2100		*	*		A
10027	16V-71 60	1566	565g	2100		*	*		A
10028	16V-71 65	1625	615g	2100		*	*		A
10317	16V-71T N60	1646	552g	2100		*	*		A
10318	16V-71T N65	1772	628g	2100		*	*		A

engine file number	model, descr	peak lb.ft	gross=g net=n hp	gov rpm	for vocations, see below 1	2	3	4	5
DETROIT DIESEL ALLISON:									
10319	16V-71T N70	1862	682g	2100		*	*		A
10320	16V-71T N75	1950	724g	2100		*	*		A
10036	16V-71TI 80	1987	727g	2100		*	*		A
10037	16V-71TI 90	2155	800g	2100		*	*		A
10029	16V-71TV 70	1839	665g	2100		*	*		A
10031	16V-71TV 75	1940	700g	2100		*	*		A
10006	16V-92 70	1816	640g	2100		*	*		A
10008	16V-92 75	1890	684g	2100		*	*		A
10011	16V-92 80	1967	720g	2100		*	*		A
10013	16V-92 85	2073	769g	2100		*	*		A
10038	16V-92T 80	2101	750g	2100		*	*		A
10039	16V-92T 85	2213	800g	2100		*	*		A
10041	16V-92T 90	2405	860g	2100		*	*		A
10202	16V-92TA 90	2415	880g	2100		*	*		A
DETROIT DIESEL ALLISON: (CALIFORNIA)									
10259	6-71TAC 7G65 CALIF.CY81,82,83	694	235g	2100	*	*	*		
10260	6-71TAC 7G70 CALIF.CY81,82,83	745	250g	2100	*	*	*		
10261	6-71TAC 7G75 CALIF.CY81,82,83	783	270g	2100	*	*	*		
10266	6-71TTAC 7G75 CALIF.CY81,82,83	781	180g	1800	*	*	*		
10265	6-71TTAC 7G75 CALIF.CY81,82,83	787	210g	1800	*	*	*		
10264	6-71TTAC 7G75 CALIF.CY81,82,83	783	230g	1950	*	*	*		
10263	6-71TTAC 7G75 CALIF.CY81,82,83	783	230g	2100	*	*	*		
10262	6-71TTAC 7G75 CALIF.CY81,82,83	783	240g	2100	*	*	*		
10373	6-71TTACC 7G75 CALIF.CY81,82,83	785	230g	1800	*	*	*		
10413	6.2L CALIF.,CY83 G HEAVY DUTY	241	140n	3600	*	*	*		
10381	6.2L (LH6) CALIF.,CY82	240	125n	4000	*	*	*		
10382	6.2L (LL4) CALIF.,CY82	240	132n	4000	*	*	*		
10304	6V-92TAC 7G65 CALIF.NO.1,CY81,82,8	709	216g	2100				*	
10307	6V-92TAC 7G65 CALIF.NO.2,CY81,82,8	744	232g	2100				*	
10305	6V-92TAC 7G70 CALIF.NO.1,CY81,82,8	762	236g	2100				*	
10297	6V-92TAC 7G70 CALIF.NO.2,CY81,82,8	800	253g	2100				*	
10306	6V-92TAC 7G75 CALIF.NO.1,CY81,82 ,	814	254g	2100				*	
10298	6V-92TAC 7G75 CALIF.NO.2,CY81,82,8	856	271g	2100				*	
10268	6V-92TAC 80 CALIF.NO.1,CY80,81	743	248g	2100				*	
10269	6V-92TAC 80 CALIF.NO.2,CY80,81	800	268g	2100				*	
10270	6V-92TAC 9C70 CALIF.NO.1,CY80,81	622	204g	2100				*	
10271	6V-92TAC 9C70 CALIF.NO.2,CY80,81	663	222g	2100				*	
10280	6V-92TAC 9C70 CALIF.,CY80,CY81	663	218g	2100	*	*	*		
10272	6V-92TAC 9C75 CALIF.NO.1,CY80,81	683	224g	2100				*	
10273	6V-92TAC 9C75 CALIF.NO.2,CY80,81	731	244g	2100				*	
10281	6V-92TAC 9C75 CALIF.,CY80,CY81	731	239g	2100	*	*	*		
10282	6V-92TAC 9C80 CALIF. CY80,CY81	800	263g	2100	*	*	*		
10283	6V-92TAC 9C85 CALIF. CY80,CY81	861	285g	2100	*	*	*		
10284	6V-92TAC 9C90 CALIF. CY80,CY81	921	305g	2100	*	*	*		
10341	6V-92TAC 9E65 CALIF.NO.1,CY81,82,8	767	222g	2100				*	
10343	6V-92TAC 9E65 CALIF.NO.2,CY81,82,8	798	240g	2100				*	
10342	6V-92TAC 9E70 CALIF.NO.1,CY81,82,8	809	240g	2100				*	
10344	6V-92TAC 9E70 CALIF.NO.2,CY81,82,8	846	260g	2100				*	

engine file number	model, descr	peak lb-ft	gross=@ net=n hp	gov rpm	for vocations: see below 1	2	3	4	5
DETROIT DIESEL ALLISON: (CALIFORNIA)									
10363	6V-92TAC 9F90 CALIF,CY81,82,83	959	304@	1800	*	*	*		
10362	6V-92TAC 9F90 CALIF,CY81,82,83	960	325@	2100	*	*	*		
10287	6V-92TTAC 9C90 CALIF, CY80,CY81	921	270@	2100	*	*	*		
10285	6V-92TTAC 9C90 CALIF,CY80,CY81	921	240@	1900	*	*	*		
10286	6V-92TTAC 9C90 CALIF,CY80,CY81	921	270@	1950	*	*	*		
10288	6V-92TTAC 9C90 CALIF,CY80,CY81	921	290@	1950	*	*	*		
10364	6V-92TTAC 9F90 CALIF,CY81,82,83	959	240@	1800	*	*	*		
10375	6V-92TTAC 9F90 CALIF,CY81,82,83	959	270@	1800	*	*	*		
10183	6V-92TTAC 9F90 CALIF,CY81,82,83	958	270@	1950	*	*	*		
10184	6V-92TTAC 9F90 CALIF,CY81,82,83	959	270@	2100	*	*	*		
10256	8.2 L N.A.4A53 CALIF,CY81,82,83	350	165@	3000					BDGHJKLMP RSwx
10401	8.2 L N.A. 4A53 CALIF.,CY83	360	165@	2800	*	*	*		
10345	8.2 L TURBO 4C65 CALIF,CY81,82,83	430	205@	3000					BDGHJKLMP RSwx
10404	8.2 L TURBO 4C65 CALIF.,CY83	430	200@	2800	*	*	*		
10376	8V-92TAC 7G75 CALIF,CY81,82,83	1150	355@	1800	*	*	*		
10289	8V-92TAC 9C80 CALIF, CY80,CY81	1079	347@	2100	*	*	*		
10290	8V-92TAC 9C85 CALIF, CY80,CY81	1164	377@	2100	*	*	*		
10291	8V-92TAC 9C90 CALIF, CY80,CY81	1236	405@	2100	*	*	*		
10366	8V-92TAC 9F90 CALIF,CY81,82,83	1251	440@	2100	*	*	*		
10292	8V-92TTAC 9C90 CALIF, CY80,CY81	1236	335@	1900	*	*	*		
10293	8V-92TTAC 9C90 CALIF, CY80,CY81	1236	365@	1950	*	*	*		
10294	8V-92TTAC 9C90 CALIF, CY80,CY81	1236	365@	2100	*	*	*		
10367	8V-92TTAC 9F90 CALIF,CY81,82,83	1251	365@	1950	*	*	*		
10356	8V-92TTAC 9F90 CALIF,CY81,82,83	1251	365@	2100	*	*	*		
CUMMINS:									
20224	3B2.9 PRELIMINARY	135	56@	2500		*	*		A
20225	4B3.9 PRELIMINARY	184	76@	2500		*	*		A
20226	4B3.9 PRELIMINARY	184	80@	2800	*	*	*		
20227	4BT3.9 PRELIMINARY	251	100@	2500		*	*		A
20228	4BT3.9 PRELIMINARY	236	105@	2800	*	*	*		
20229	4BTA3.9 PRELIMINARY	283	116@	2500		*	*		A
20230	4BTA3.9 PRELIMINARY	266	122@	2800	*	*	*		
20231	6B5.9 PRELIMINARY	280	116@	2500		*	*		A
20232	6B5.9 PRELIMINARY	280	120@	2800	*	*	*		
20233	6BT5.9 PRELIMINARY	381	152@	2500		*	*		A
20234	6BT5.9 PRELIMINARY	361	160@	2800	*	*	*		
20235	6BTA5.9 PRELIMINARY	432	177@	2500		*	*		A
20236	6BTA5.9 PRELIMINARY	406	186@	2800	*	*	*		
20237	6CB.3 PRELIMINARY	411	158@	2200		*	*		A
20238	6CB.3 PRELIMINARY	408	160@	2500	*	*	*		
20239	6CTB.3 PRELIMINARY	545	204@	2200		*	*		A
20240	6CTB.3 PRELIMINARY	529	213@	2500	*	*	*		
20241	6CTA8.3 PRELIMINARY	631	234@	2200		*	*		A
20242	6CTA8.3 PRELIMINARY	610	250@	2500	*	*	*		
20210	FLEET 270 CY81,CY82	1020	250@	1600	*	*	*		
20209	FLEET 270 CY81,CY82	1021	270@	1600	*	*	*		

engine file number	model, descr	peak lb.ft	gross=@ netm hp	gov rpm	for vocations, see below 1	2	3	4	5
CUMMINS:									
20134	KT-1150-C 450 12% TORQUE RISE	1256	450@	2100		*	*		A
20009	KT-1150-C 450 20% TORQUE RISE	1352	450@	2100		*	*		A
20141	KT-2300-C 900	2702	900@	2100		*	*		A
20108	KT-450 CY81,CY82,CY83	1350	450@	2100	*	*	*		
20135	KTA-1150-C 525 10% TORQUE RISE	1441	525@	2100		*	*		A
20136	KTA-1150-C 525 20% TORQUE RISE	1582	525@	2100		*	*		A
20137	KTA-1150-C 600 10% TORQUE RISE	1655	600@	2100		*	*		A
20243	KTA-2300-C 1050	3024	1050@	2100		*	*		A
20065	KTA-2300-C 1200	3300	1200@	2100		*	*		A
20244	KTA-2300-C 1350	3885	1350@	2100		*	*		A
20094	KTA-2300-C 15% TORQUE RISE	3020	1052@	2100		*	*		A
20064	KTA-3067-C 1350	3712	1350@	2100		*	*		A
20243	KTA-3067-C 20% TORQUE RISE	4066	1331@	2100		*	*		A
20110	KTA-525 CY81,CY82	1651	525@	1900	*	*	*		
20109	KTA-525 CY81,CY82,CY83	1651	525@	2100	*	*	*		
20111	KTA-600 CY81,CY82,CY83	1652	600@	2100	*	*	*		
20253	LTA 10-240 CY83 SPL LU OPER MAY BE	857	240@	1900	*	*	*		
20246	LTA 10-240 CY83 SPL LU OPER MAY BE	870	240@	2100	*	*	*		
20251	LTA 10-240 CY83 SPL LU OPER MAY BE	750	240@	2100	*	*	*		
20254	LTA 10-270 CY83 SPL LU OPER MAY BE	860	270@	1900	*	*	*		
20247	LTA 10-270 CY83 SPL LU OPER MAY BE	858	270@	2100	*	*	*		
20255	LTA 10-320 CY83	862	320@	2100					Sb
20099	NH-230 CY81,CY82	644	220@	2100	*	*	*		
20175	NHHTC-290 CY81,CY82	930	270@	2100	*	*	*		
20174	NHHTC-290 CY83	924	290@	2100	*	*	*		
20177	NHHTC-290 FORMULA,CY81,CY82	930	270@	1900	*	*	*		
20176	NHHTC-290 FORMULA,CY81,CY82	930	290@	1900	*	*	*		
20252	NHHTC-350 CY83	1066	350@	2100	*	*	*		
20001	NT-855-C 280	805	280@	2100		*	*		A
20002	NT-855-C 295	740	295@	2300					EXc
20003	NT-855-C 310	891	310@	2100		*	*		A
20004	NT-855-C 335	930	335@	2100		*	*		A
20005	NT-855-C 365	930	365@	2300					EXc
20006	NTA-855-C 360	990	360@	2100		*	*		A
20007	NTA-855-C 380	962	380@	2300		*	*		A
20142	NTA-855-C 400	1150	400@	2100		*	*		A
20008	NTA-855-C 420	1130	420@	2300		*	*		A
20205	NTC-240 FORMULA,CY81,CY82,CY83	900	240@	1800	*	*	*		
20208	NTC-270 FORMULA CY81,CY82,CY83	1000	270@	1900	*	*	*		
20143	NTC-300 CY81,CY82,CY83	1000	300@	2100	*	*	*		
20156	NTC-300 CY82	1000	270@	2100	*	*	*		
20157	NTC-300 FORMULA, CY81,CY82,CY83	1000	300@	1800	*	*	*		
20158	NTC-300 FORMULA, CY82	1000	270@	1800	*	*	*		
20160	NTC-350 CY81	1120	320@	2100	*	*	*		
20159	NTC-350 CY81	1120	350@	2100	*	*	*		
20219	NTC-350 CY82	1180	350@	2100	*	*	*		
20219	NTC-350 CY83	1175	330@	2100	*	*	*		
20162	NTC-350 FORMULA CY81	1120	320@	1800	*	*	*		
20161	NTC-350 FORMULA CY81	1120	350@	1800	*	*	*		

engine file number	model, descr	gross=s peak lb.ft	net=n hp	gov rpm	for vocations, see below 1	2	3	4	5
CUMMINS:									
20220	NTC-350 FORMULA CY82	1181	320s	1800	*	*	*		
20218	NTC-350 FORMULA CY82	1180	350s	1800	*	*	*		
20250	NTC-350 FORMULA CY83	1175	350s	1800	*	*	*		
20221	NTC-350 C Y82	1180	320s	2100	*	*	*		
20163	NTC-400 CY81	1150	400s	2100	*	*	*		
20223	NTC-400 CY82	1253	400s	2100	*	*	*		
20222	NTC-400 FORMULA CY82,CY83	1251	400s	1900	*	*	*		
20178	NTC-475 CY81,CY82,CY83	1430	475s	2100	*	*	*		
20211	NTC-475 FORMULA,CY81,CY82,CY83	1421	450s	1900	*	*	*		
20206	PT-240 CY81,CY82,CY83	650	230s	2100	*	*	*		
20181	PT-240 CY81,CY82,CY83	900	240s	2100	*	*	*		
20207	PT-270 CY81,CY82,CY83	1000	270s	2100	*	*	*		
20217	PT-270 DERATED CY81,CY83	930	270s	2100	*	*	*		
20010	V-378-C 155	289	142s	2800		*	*		A
20012	V-504-C 210	388	190s	2800		*	*		A
20077	V-555 CY81,CY82,CY83	425	202s	3000	*	*	*		
20076	V8-210 1978	370	183s	3000	*	*	*		
20020	VT-1710-C 635	1748	635s	2100	*	*	*		
20173	VT-225 CY81,CY82,CY83	445	225s	3000	*	*	*		
20248	VT-225 453 CY83	453	225s	3000	*	*	*		
20204	VT-300 FORMULA,CY81,CY82	860	270s	2100	*	*	*		
20203	VT-300 FORMULA,CY81,CY82,CY83	860	300s	2100	*	*	*		
20151	VT-350 CY81,CY82	858	320s	2400	*	*	*		
20150	VT-350 CY81,CY82,CY83	858	350s	2400	*	*	*		
20014	VT-555 240	443	221s	2800		*	*		A
20021	VTA-1710-C 700	1921	700s	2100		*	*		A
CUMMINS: (CALIFORNIA)									
20215	NTC-475 CALIF,CY81,CY82,CY83	1430	475s	2100	*	*	*		
20216	NTC-475 FORMULA,CALIF,CY81,82,83	1421	451s	1900	*	*	*		
20213	NTCC-240 FORMULA,CALIF,CY81,CY82	900	240s	1800	*	*	*		
20166	NTCC-300 CALIF. CY81,CY82,CY83	1000	270s	2100	*	*	*		
20165	NTCC-300 CALIF. CY81,CY82,CY83	1000	300s	2100	*	*	*		
20168	NTCC-300 FORMULA,CALIF.,CY81,82	1000	270s	1800	*	*	*		
20167	NTCC-300 FORMULA,CALIF.CY81,82,83	1000	300s	1800	*	*	*		
20170	NTCC-350 CALIF. CY81,CY82,CY83	1120	320s	2100	*	*	*		
20169	NTCC-350 CALIF. CY81,CY82,CY83	1120	350s	2100	*	*	*		
20172	NTCC-350 FORMULA,CALIF.,CY81,82	1120	320s	1800	*	*	*		
20171	NTCC-350 FORMULA,CALIF.CY81,82,83	1120	350s	1800	*	*	*		
20127	NTCC-400 CALIF. CY81,CY82,CY83	1150	400s	2100	*	*	*		
20214	PT-240 CALIF,CY81,CY82,CY83	650	230s	2100	*	*	*		
20212	PT-240 CALIF,CY81,CY82,CY83	900	240s	2100	*	*	*		
CATERPILLAR:									
30103	3208 165 DINA,CY81,CY82,CY83	399	165s	2600	*	*	*		
30061	3208 175 CY81,CY82,CY83	405	175s	2800	*	*	*		
30137	3208 175 DINA	400	175s	2800		*			dev
30062	3208 185 CY81,CY82,CY83	452	185s	2600	*	*	*		
30164	3208 200 DIT,CY82,CY83	621	200s	2000	*	*	*		

engine file number	model, descr	peak lb.ft	gross=g net=n hp	gov rpm	for vocations, see below 1	2	3	4	5
ATERPILLAR:									
30059	3208 210 CY81,CY82,CY83	500	210g	2800	*	*	*		
30136	3208 210 DINA	500	210g	2800		*			dev
30151	3208 250 DIT	640	250g	2600		*			dev
30118	3208T 225 CY81	560	225g	2600	*	*	*		
30127	3208T 225 DIT,CY82,CY83	585	225g	2600	*	*	*		
30117	3208T 250 CY81,CY82	610	250g	2600	*	*	*		
30165	3208T 250 CY82,CY83	640	250g	2600	*	*	*		
30138	3306 150 PCNA	425	150g	2200		*			dev
30149	3306 200 PCT	600	200g	2200		*			dev
30148	3306 225 PCT	691	225g	2200		*			dev
30070	3306 245 CY81,CY82,CY83	820	245g	2200	*	*	*		
30157	3306 245 DITA,CY82,CY83	861	245g	2100	*	*	*		
30156	3306 250 DITA,CY82,CY83	861	250g	1800	*	*	*		
30139	3306 250 PCT	685	250g	2200		*			dev
30155	3306 260 DITA,CY82,CY83	861	260g	1900	*	*	*		
30158	3306 270 DITA,CY82,CY83	861	270g	2000	*	*	*		
30144	3306 270 PCTA	742	270g	2200		*			dev
30126	3306 270 PCTA,CY81,CY82,CY83	775	270g	2200	*	*	*		
30108	3406 280 DIT,CY81,CY82,CY83	1015	280g	2100	*	*	*		
30107	3406 290 DIT,CY81,CY82	1000	290g	1900	*	*	*		
30160	3406 290 DIT,CY82	1000	290g	1800	*	*	*		
30106	3406 305 DIT,CY81	1050	305g	1900	*	*	*		
30159	3406 310 DITA,CY82,CY83	1090	310g	1800	*	*	*		
30131	3406 325 DIT	1015	325g	2100		*			dev
30125	3406 325 DIT,CY81,CY82	1050	325g	2100	*	*	*		
30078	3406 350 CY81,CY82	1166	350g	1900	*	*	*		
30161	3406 350 DITA,CY82,CY83	1200	350g	1800	*	*	*		
30129	3406 360 DITA	1121	360g	2100		*	*		A
30130	3406 375 PCTA	1084	375g	2100		*			dev
30101	3406 380 CY81	1245	380g	2100	*	*	*		
30123	3406 400 CY81,CY82,CY83	1270	400g	2100	*	*	*		
30128	3406 400 DITA	1205	400g	2100		*	*		A
30166	3406B 400 CY84,PRELIM.	1375	400g	2100	*	*	*		
30114	3408 425	1296	425g	2100		*	*		A
30143	3408 425 DIT	1296	425g	2100		*			dev
30100	3408 450 CY81,CY82,CY83	1460	450g	2100	*	*	*		
30113	3408 450 DITA,CY82,CY83	1358	450g	2100	*	*	*		
30115	3408 475 DITA	1416	475g	2100		*			dev
30142	3408 475 PCTA	1390	475g	2100		*			dev
30116	3412 575	1820	575g	1800		*	*		A
30027	3412 575	1727	575g	2100		*	*		A
30147	3412 575 DIT	1817	575g	2100		*			dev
30028	3412 650	1953	650g	2100		*	*		A
30145	3412 650 DIT	1953	650g	2100		*			dev
30153	3412 700 DITA	2081	700g	2100		*			dev
30154	3412 725 PCTA	2075	725g	2100		*			dev
30029	3412 750	2150	750g	2100					
30146	3412 750 PCTA	2150	750g	2100		*			dev
30163	3512 1200 DITA	3888	1200g	1800		*			dev

engine file number	model, descr	peak lb.ft	gross=g net=n hp	gov rpm	for vocations, see below 1	2	3	4	5
CATERPILLAR:									
30162	3516 1600 DITA	5043	1600g	1800	*				dev
30031	D333T 250	685	250g	2200	*	*			A
30134	D348PCTA 850	2602	850g	2000	*				dev
30135	D348PCTA 920	2701	920g	2000	*				dev
30034	D348T 850	2601	850g	2000	*	*			A
30132	D349PCTA 1130	3251	1130g	2000	*				dev
30133	D349PCTA 1220	3479	1220g	2000	*				dev
30102	D349TA 1220	3492	1220g	2000	*	*			A
CATERPILLAR: (CALIFORNIA)									
30065	3208 175 CALIF.,CY81,CY82,CY83	425	175g	2800	*	*	*		
30064	3208 200 CALIF.,CY81,CY82,CY83	490	200g	2800	*	*	*		
30120	3208T 210 DIT,CALIF.,CY82,CY83	576	210g	2600	*	*	*		
30071	3306 245 CALIF.,CY81,CY82,CY83	820	245g	2200	*	*	*		
30067	3306 250 CALIF.,CY81	690	250g	2200	*	*	*		
30069	3306 270 CALIF.,CY81,CY82,CY83	775	270g	2200	*	*	*		
30111	3406 300 DITA,CALIF.CY81,82,83	1054	300g	1900	*	*	*		
30110	3406 300 DITA,CALIF.CY81,82,83	1054	300g	2100	*	*	*		
30124	3406 380 DITA,CALIF.CY81,82,83	1286	380g	2100	*	*	*		
30091	3408 450 CALIF.,CY81,CY82,CY83	1350	450g	2100	*	*	*		
CHEVROLET:									
40013	5.7L(350) CY81,CY82,CY83	275	161n	3800	*	*	*		
40015	6.0L(366) DUAL EXHAUST,CY81,82,83	305	190n	4000	*	*	*		
40014	6.0L(366) SINGLE EXH.CY81,82,83	290	180n	4000	*	*	*		
40033	6.2 L (LH6) CY82,CY83	240	125n	4000	*	*	*		
40034	6.2 L (LL4) CY82,CY83	240	132n	4000	*	*	*		
40017	7.0L(427) DUAL EXHAUST,CY81,82,83	350	207n	4000	*	*	*		
40032	7.0L(427) SINGLE EXH.CY81,82,83	340	195n	3800	*	*	*		
40018	7.4L(454) CY83	365	225n	4000	*	*	*		
FORD:									
60016	6.1L(370)2V CY81,CY82,CY83	274	154n	3600	*	*	*		
60017	6.1L(370)4V CY81	283	178n	3600	*	*	*		
60023	6.1L(370)4V CY82,CY83	293	176n	3600	*	*	*		
60018	7.0L(429)4V CY81,CY82,CY83	343	223n	4000	*	*	*		
FORD: (CALIFORNIA)									
60022	6.1L(370)2V CALIF. CY82,CY83	274	154n	3600	*	*	*		
60024	6.1L(370)4V CALIF. CY82,CY83	284	171n	3600	*	*	*		
60025	7.0L(429)4V CALIF. CY82,CY83	343	223n	4000	*	*	*		
INTERNATIONAL HARVESTER:									
70042	6.9 LITER CY83	305	155g	3000	*	*	*		
70031	9.0 LITER CY81,CY82,CY83	366	165g	2800	*	*	*		
70032	9.0 LITER CY81,CY82,CY83	401	180g	2800	*	*	*		
70021	DT-466B CY81,CY82	415	160g	2400	*	*	*		
70015	DT-466B CY81,CY82	445	180g	2600	*	*	*		
70017	DT-466B CY81,CY82	488	210g	2600	*	*	*		

engine file number	model, descr	peak lb.ft	gross=g net=n hp	gov rpm	for vocations, see below 1	2	3	4	5
INTERNATIONAL HARVESTER:									
70045	DT-466C CY82,CY83	466	180g	2400	*	*	*		
70044	DT-466C CY82,CY83	513	210g	2600	*	*	*		
70046	DT-466C CY83	426	165g	2400	*	*	*		
70050	DT-466C CY83	473	195g	2600	*	*	*		
70025	MV-404 2BBL CY81	326	189n	3600	*	*	*		
70026	MV-404 4BBL CY81	336	206n	3600	*	*	*		
70027	MV-446 CY81	385	227n	3600	*	*	*		
70023	V-345 W/GOV. CY81,CY82,CY83	287	162n	3600	*	*	*		
70022	V-345 W/O GOV. CY81,CY82,CY83	278	147n	3600	*	*	*		
70024	V-392 CY81,CY82,CY83	302	185n	3600	*	*	*		
70028	V-537 2BBL CY81	410	203n	3200	*	*	*		
INTERNATIONAL HARVESTER: (CALIFORNIA)									
70043	6.9 LITER CALIF.,CY83	305	155g	3000	*	*	*		
70040	9.0 LITER CALIF.,CY82	373	175g	2800	*	*	*		
70039	DT-466B CALIF.,CY81,CY82	422	180g	2600	*	*	*		
70049	DT-466C CALIF.,CY83	423	165g	2400	*	*	*		
70041	DTI-466B CALIF.,CY81,CY82,CY83	488	210g	2600	*	*	*		
70047	DTI-466C CALF. CY83	543	210g	2600	*	*	*		
70036	MV-404 2BBL CALIF.,CY81	324	183n	3600	*	*	*		
70037	MV-446 CALIF.,CY81	380	221n	3600	*	*	*		
70035	V-345 CALIF.,CY81,CY82,CY83	281	155n	3600	*	*	*		
MACK:									
80065	E4-210 CY81,CY82,CY83	533	210g	2400	*	*	*		
80043	E6-200 CY81,CY82,CY83	600	200g	2100	*	*	*		
80062	E6-250 CY81,CY82,CY83	750	250g	2100	*	*	*		
80044	E6-260 CY81,CY82,CY83	775	260g	2100	*	*	*		
80055	E6-315 CY81,CY82,CY83	1050	315g	1900	*	*	*		
80054	E6-315R CY80,CY81	1050	315g	1800	*	*	*		
80057	E6-320 CY80,CY81	1000	320g	2100	*	*	*		
80080	E6-325 CY81,CY82,CY83	1051	325g	1950	*	*	*		
80082	E6-325R CY81,CY82,CY83	1051	325g	1800	*	*	*		
80073	E6-350 CY81,CY82,CY83	1132	350g	1950	*	*	*		
80063	E6-350 CY81,CY82,CY83	1132	350g	1950	*	*	*		
80064	E6-350R CY81,82,83 ENC426S-80	1132	350g	1800	*	*	*		
80074	E6-350R CY81,82,83 ENC441C-81	1131	350g	1800	*	*	*		
80070	E9-440 CY81,CY82,CY83	1497	440g	1800	*	*	*		
80076	EM6-225 CY81,CY82,CY86	844	225g	2100	*	*	*		
80046	EM6-237 CY81,CY82,CY83	906	237g	2100	*	*	*		
80061	EM6-237R CY81,CY82,CY83	907	237g	1800	*	*	*		
80066	EM6-250 CY81,CY82,CY83	941	250g	2100	*	*	*		
80075	EM6-250R CY81,CY82,CY83	940	250g	1700	*	*	*		
80079	EM6-275 CY81,CY82,CY83	1038	275g	2100	*	*	*		
80083	EM6-275L CY82,CY83	1279	275g	1700	*	*	*		
80071	EM6-275R CY81,CY82,CY83	1086	275g	1600	*	*	*		
80041	EM6-285 CY81,CY82,CY83	1080	285g	2100	*	*	*		
80042	EM6-285R CY81,CY82,CY83	1081	285g	1700	*	*	*		
80067	EM6-300 CY81,CY82,CY83	1126	300g	2100	*	*	*		

engine file number	model, descr	peak lb.ft	gross=@ net=@ hp	gov rpm	for vocations, see below 1	2	3	4	5
MACK:									
80072	EM6-300R CY81,CY82,CY83	1123	300@	1700	*	*	*		
80087	EM6-300R CY83	1124	300@	1900	*	*	*		
80047	EM9-400 CY81,CY82,CY83	1520	400@	2100	*	*	*		
80048	EM9-400R CY81,CY82,CY83	1520	400@	1700	*	*	*		
80078	EM9-400R CY81,CY82,CY83	1521	400@	1900	*	*	*		
80052	EMC6-250 CY81,CY82,CY83	951	250@	2100	*	*	*		
80059	EMC6-285 CY81,CY82,CY83	1080	285@	2100	*	*	*		
80060	EMC6-285R CY81,CY82,CY83	1080	285@	1700	*	*	*		
80049	EMC9-400 CY81,CY82,CY83	1520	400@	2100	*	*	*		
80051	EMC9-400R CY81,CY82,CY83	1520	400@	1700	*	*	*		
80077	EMC9-400R CY81,CY82,CY83	1521	400@	1900	*	*	*		
80091	RVI-MIDR0602 12B CY83	397	175@	2800	*	*	*		
80068	RVI-MIDR0602 12C CY81	369	176@	2800	*	*	*		
80090	RVI-MIDR0602 12C CY83	395	175@	2600	*	*	*		
80092	RVI-MIDR0602 12E CY83	385	165@	2800	*	*	*		
80069	RVI-MIDR0620 30 CY81	510	210@	2300	*	*	*		
80093	RVI-MIDR0620 30K CY83	525	210@	2300	*	*	*		
MACK: (CALIFORNIA)									
80058	EC6-235 CALIF. CY81,CY82,CY83	700	235@	2100	*	*	*		
80081	EC6-330 CALIF. CY82,CY83	1046	330@	1950	*	*	*		
80084	EC6-350 CALIF. CY81,CY82,CY83	1130	350@	1950	*	*	*		
80085	EC6-350R CALIF. CY83	1131	350@	1800	*	*	*		
80086	EC9-440 CALIF. CY83	1497	440@	1800	*	*	*		
80088	EMC6-300 CALIF. CY83	1125	300@	2100	*	*	*		
80089	EMC6-300R CALIF. CY83	1128	300@	1700	*	*	*		
MERCEDES BENZ:									
90001	OM-352 CY80,CY81,CY82	260	130@	2800	*	*	*		
90002	OM-352A CY80,CY81,CY82	310	136@	2800	*	*	*		

6. ENGINE—ENTERING DATA FROM TERMINAL

All users may enter their own engine data by leaving the "ENGINE" description blank. See Item 4, page 5. When entering engine data from the terminal (see work sheet) it will be necessary to specify the engine type:

1 – Gasoline (Spark Ignition)
2 – Diesel (Conventional)
3 – Diesel (High Torque Rise)

This identification is used by the program to insure proper shift calibration selection for automatic transmissions. For example, the Allison HT 740 (Truck Economy Calibration) and HT 750DR (High Torque Rise Calibration) transmissions are compatible only with engine type 3. For SCAAN, a diesel engine must have the following characteristics to qualify as high torque rise:

- GROSS PEAK TORQUE SPEED MUST BE EQUAL TO OR LESS THAN 1300 RPM
- RATE OF TORQUE RISE FROM GOV. SPEED TO PEAK TORQUE SPEED MUST BE EQUAL TO OR GREATER THAN 4% PER 100 RPM.

Entering Engine Curves

To assure that the engine curve data entered into SCAAN is interpolated accurately by SCAAN, the following guidelines should be observed when choosing the eight data points.

1. As is stated on the worksheet, it is highly recommended and encouraged to enter torque values instead of horsepower. This will make obtaining a smooth torque curve as well as a peak torque value much easier.
2. If the data is in tabular form, a curve should be plotted before entering the data. In this way, the user will be able to recognize any features of the curve that require special treatment.
3. The torque value entered at full load governed speed should be such that the given horsepower rating at that speed is attained.
4. The data points entered should be such that the ratio of one interval to the next is between 1/3 and 3.
5. The first speed entered should be at least 200 RPM below peak torque speed.
6. The peak torque value must be one of the eight points. (Figure 1)
7. When there is a drastic change in the shape of the curve, it is necessary to cluster the points around this area. The interval ratio must still fall between 1/3 and 3 as is stated above. (Figure 2)
8. When a discontinuity occurs on the curve (a sharp turn or a corner) that point must be entered twice. Furthermore, there must be at least two points entered before and after the discontinuity. (Figure 3)
9. For smoke limited engines and others that result in a torque curve as is shown below (Figure 4), the following procedure should be observed. The section of the curve before point 1 should not be entered since the engine will not operate in this range under wide open throttle. Point 1 should be entered first. Point 2 should be entered at 1 ft-lb (n-m) greater than the actual value so that SCAAN can recognize a definitive peak torque. Point 3 should be entered twice since it is a discontinuity. The remaining points should be used to describe the torque behavior between point 3 and full-load governed RPM.

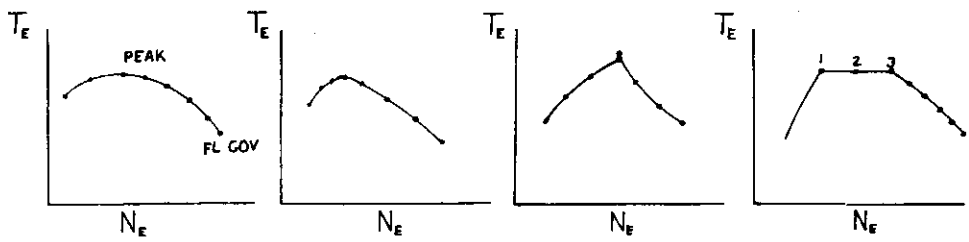

FIG. 1 FIG. 2 FIG. 3 FIG. 4

ENGINE DATA WORK SHEET

ENTER ENGINE IDENTIFICATION, SUCH AS MODEL, REF., ETC.
50 CHARACTERS MAX.

_____

IS THIS ENGINE:
- 1 – GASOLINE (SPARK IGNITION) ☐
- 2 – DIESEL (CONVENTIONAL) ☐
- 3 – DIESEL (HIGH TORQUE RISE) ☐

DO YOU HAVE YOUR DATA IN . . .
- 1 – SPEED, HORSEPOWER ☐ (NOT RECOMMENDED!)
- 2 – SPEED, TORQUE ☐

ENGINE SPEED

1	2	3	4	5	6	7	!8FL GOV!	NL GOV!

ENGINE TORQUES

1	2	3	4	5	6	7	!8FL GOV!	NL GOV!

DO YOU WANT TO ALLOW CONVERTER MATCHES BELOW PEAK TORQUE RPM? YES ☐ NO ☐

ENTER ENGINE DISPLACEMENT IN CUBIC INCHES = _____

IS THE DATA YOU JUST ENTERED . . .
- 1 – GROSS (NO DEDUCTIONS) ☐
- 2 – NET (INCLUDES SOME DEDUCTIONS) ☐
- 3 – NET (INCLUDES ALL DEDUCTIONS FOR THIS VOCATION) ☐

- ☐ FAN
- ☐ ALTERNATOR
- ☐ AIR COMPRESSOR
- ☐ STEER PUMP
- ☐ IMPLEMENT PUMP
- ☐ BOWL PUMP
- ☐ ELEVATOR PUMP
- ☐ AIR CONDITIONER

DO YOU WANT TO ENTER ENGINE FRICTION DATA (REQUIRED IF YOU WANT ENGINE BRAKING OR RETARDATION PERFORMANCE)

Y/N = _____

ENTER ENGINE IDLE RPM = _____

ENTER 5 VALUES, ENGINE FRICTION RPM

1	2	3	4	5

ENTER 5 VALUES, ENGINE FRICTION POWER

1	2	3	4	5

7. **ENGINE—ACCESSORY DEDUCTIONS**—This table shows the standard engine accessory deductions in percent for the various vocations. The accessory power loss is determined by multiplying the engine ghp at gov. rpm times this percentage and varying this power throughout the speed range as outlined below. The user may modify these deductions to meet specific requirements for his application.

Fan	An engaged fan requires power proportional to the cube of engine speed. Most SCAAN vocations have an optional clutch fan. With the fan disengaged, no power loss is considered.*
Alternator/Generator	Constant power loss across speed range.
Air Compressor Steer Pump Implement Pump Bowl Pump Elevator Drive Air Conditioning	Power loss is proportional to engine speed

*SCAAN Application Summaries are based on the clutch fan engaged.

STANDARD ENGINE ACCESSORY DEDUCTIONS - PERCENT

File no	Vocation	fan	alt/ gen	air comp	steer pump	impl drve	bowl pump	elev drve	air con
1010	INDUSTRIAL POWER PACKAGE	5.5	0.5			0.0			
2110	SHORT HAUL TRACTOR/TRAILER	5.5	0.5	0.5	0.5	0.0			0.0
2121	LINE HAUL- EASTERN N.A.	5.5	0.5	0.5	0.5	0.0			0.0
2122	LINE HAUL- WESTERN N.A.	5.5	0.5	0.5	0.5	0.0			0.0
2123	LINE HAUL- EUROPE	6.5	0.5	0.5	0.5	0.0			0.0
2130	MOTOR HOME	6.5	0.5	0.5	0.5				0.0
2140	INTERCITY BUS	6.5	0.5	0.5	0.5				0.0
2150	CAR HAULER	6.5	0.5	0.5	0.5	0.0			0.0
2160	TRUCK- ONE-WAY RENTAL	6.5	0.5	0.5	0.5	0.0			0.0
2210	SCHOOL BUS	6.5	0.5	0.5	0.5	0.0			0.0
2221	TRANSIT COACH- U.S.	8.5	0.5	0.5	0.5				0.0
2222	MULTIPURPOSE COACH- EUROPE	8.5	0.5	0.5	0.5				0.0
2230	LIQUID DELIVERY- STRAIGHT TRUCK	6.5	0.5	0.5	0.5	0.0			0.0
2240	VAN BODY- STRAIGHT TRUCK	6.5	0.5	0.5	0.5	0.0			0.0
2310	TRAILER SPOTTER	6.5	0.5	0.5	0.5	0.0			0.0
2320	DOCK SPOTTER	6.5	0.5	0.5	0.5	0.0			0.0
2400	TOW TRACTOR AIRCRAFT/HARD SURFACE	6.5	0.5	0.5	0.5	0.0			0.0
2500	BAGGAGE TOW TRUCK	6.5	0.5	0.5	0.5	0.0			0.0
2600	SPECIAL SNOW PLOW/BLOWER	6.5	0.5	0.5	0.5	0.0			
2710	FIRE TRUCK- PUMPER	6.5	0.5	0.5	0.5	0.0			0.0
2720	FIRE TRUCK- NON-PUMPER	6.5	0.5	0.5	0.5	0.0			0.0
3111	DUMP TRUCK- PUBLIC SERVICES	6.5	0.5	0.5	0.5	0.0			
3112	DUMP TRUCK- ON/OFF HIGHWAY	6.5	0.5	0.5	0.5	0.0			
3121	TRANSIT MIX- REAR DISCHARGE	6.5	0.5	0.5	0.5	0.0			
3122	TRANSIT MIX- FRONT DISCHARGE	6.5	0.5	0.5	0.5	0.0			
3130	CONSTRUCTION MATERIAL TRUCK	6.5	0.5	0.5	0.5	0.0			
3140	MOBILE BACKHOE- ON/OFF HIGHWAY	6.5	0.5	0.5	0.5	0.0			
3211	REFUSE PACKER- ON HIGHWAY	6.5	0.5	0.5	0.5	0.0			
3212	REFUSE PACKER- CONVENTIONAL	6.5	0.5	0.5	0.5	0.0			
3213	REFUSE PACKER-ROLL-OFF	6.5	0.5	0.5	0.5	0.0			
3220	FARM TRUCK	6.5	0.5	0.5	0.5	0.0			
3310	CRANE CARRIER- LIGHT (UP TO 132275 LB)	6.5	0.5	0.5	0.5	0.0			
3320	CRANE CARRIER- HEAVY (ABOVE 132275 LB)	6.5	0.5	0.5	0.5	0.0			
3400	OIL FIELD SERVICING RIG	6.5	0.5	0.5	0.5	0.0			
3510	PUBLIC UTILITY- SINGLE AXLE	6.5	0.5	0.5	0.5	0.0			
3520	PUBLIC UTILITY- DUAL AXLE	6.5	0.5	0.5	0.5	0.0			
3530	PUBLIC UTILITY- ALL-WHEEL DRIVE	6.5	0.5	0.5	0.5	0.0			
3600	TRACTOR/TRAILER- ON/OFF HIGHWAY	6.5	0.5	0.5	0.5	0.0			0.0
3700	HEAVY EQUIP TRANSPORTER TRACTOR/TRAILER	6.5	0.5	0.5	0.5	0.0			0.0
3800	STRADDLE CARRIER	6.5	0.5	0.5	0.5	0.0			
3900	CRASH TRUCK	6.5	0.5	0.5	0.5	0.0			
4011	PAN SCRAPER	7.5	0.5	0.5	2.0		2.0		
4014	ELEVATOR SCRAPER	7.5	0.5	0.5	2.0		2.0	2.0	
4020	REAR DUMP	6.5	0.5	0.5	1.0	1.0			
4030	4-WHL DR PRIME MOVER/TOW TRACTOR	6.5	0.5	0.5	1.0	1.0			
4040	UNDERGROUND MINE HAUL	6.5	0.5	0.5	1.0	1.0			
4050	BOTTOM DUMP	6.5	0.5	0.5	1.0	1.0			
5110	WHEEL LOADER	6.5	0.5	0.5	2.0	2.0			
5120	LOADER-BACKHOE	6.5	0.5	0.5	2.0	2.0			
5210	FORK LIFT- HARD SURFACE	6.5	0.5	0.5	2.0	2.0			
5220	FORK LIFT- ROUGH TERRAIN	6.5	0.5	0.5	2.0	2.0			
5230	LOG HANDLER	6.5	0.5	0.5	2.0	2.0			
5240	SKIDDER	5.5	0.5	0.5	2.0	2.0			
5310	COMPACTOR-SANITARY LANDFILL	6.5	0.5	0.5	2.0	2.0			
5320	COMPACTOR-SOIL COMPACTION	6.5	0.5	0.5	2.0	2.0			
5330	ROLLER- DRUM/RUBBER TIRE	6.5	0.5	0.5	1.0	1.0			
5400	WHEELED DOZER	6.5	0.5	0.5	2.0	2.0			
5500	TRACKED DOZER	6.5	0.5			2.0			
5600	MOBILE CRANE- ROUGH TERRAIN	6.5	0.5	0.5	1.0	2.0			
6100	OIL FIELD PUMPING AND DRILLING	5.5	0.5			2.0			
6200	HOIST/WINCH	6.5	0.5	0.5		0.0			
6300	AUGER	6.5	0.5	0.5		0.0			
6400	LOCOMOTIVE RAIL EQUIP.	6.5	0.5	0.5		0.0			
6500	AGRICULTURAL TRACTOR	6.5	0.5		2.0	0.0			0.0
6600	AGRICULTURAL SPREADER/SPRAYER	6.5	0.5		2.0	0.0			0.0
6700	AGRICULTURAL HAULER	6.5	0.5		2.0	0.0			

8. **TRANSMISSION—ALLISON FILE NUMBERS**—The transmission may be selected in SCAAN either by entering the alphanumeric transmission model (MT 643) or by TA (Transmission Application) Number from the Tramsmission Converter availability charts on following pages. If the transmission model is entered, the program will list the possible converters and then ask the user which converter he wants. The program also works this way if the TA file number is entered followed by a zero. For instance, the TA file number for the MT 643 General is 611. If 6110 is entered the program will ask which converter.

The converter may be designated by adding the converter file number to the end of the TA file number. For example, the MT 643 General with TC 370 may be specified by entering 6112 for the transmission. Using this transmission numbering designation provides a simple means of entering the transmission and converter and also allows the program to operate at maximum efficiency.

NOTE: ( ) indicates converter not production released
x = last digit of ta no., depending on converter model;

model, description	TA no.	x=1	x=2	x=3	x=4	x=5	x=6	x=7	x=8	x=9
TC-350 TORQUE CONVERTER INDUSTRIAL	201x	TC-350								
TC-370 TORQUE CONVERTER INDUSTRIAL	202x	TC-370								
TC-400 TORQUE CONVERTER INDUSTRIAL	203x	TC-470	TC-450	TC-430						
TC-500 TORQUE CONVERTER INDUSTRIAL	204x	TC-580	TC-570	TC-560	TC-550	TC-540	TC-530			
TC-800 TORQUE CONVERTER IND.	206x	TC-850	TC-840							
TC-900 TORQUE CONV. (STD OIL PUMP) IND	208x	TC-950	TC-940							
TC-900 TORQUE CONV. (LARGE OIL PUMP) IND.	209x	TC-950	TC-940							
AT-545 DIESEL	511x	TC-270	TC-290							
AT-545 GASOLINE	512x	TC-270								
AT-545 HI TORQUE (TRUCKS)	515x		TC-290							
AT-545 HI TORQUE (SCHOOL BUS,MOTORHOME,FIRETRUCK)	516x		TC-290							
AT-543 GENERAL	551x	(TC-350)	TC-370	TC-380	TC-375					
MT-643 GENERAL	611x	TC-350	TC-370	TC-380	(TC-360)					
MT-643 GENERAL(2-ND GEAR START)	612x	TC-350	TC-370	TC-380	(TC-360)					
MT-653 DR GENERAL	613x	TC-350	TC-370	TC-380	(TC-360)					
MT-643 TRAILER SPOTTER	614x	TC-350	TC-370	TC-380	(TC-360)					
MT-653 DOCK SPOTTER	615x	TC-350	TC-370	TC-380	(TC-360)					
MT-653 TRAILER SPOTTER	616x	TC-350	TC-370	TC-380	(TC-360)					
MT-643 STATIONARY EQUIPMENT	621x	TC-350	TC-370	TC-380	(TC-360)					
MT-653 STATIONARY EQUIPMENT	624x	TC-350	TC-370	TC-380	(TC-360)					
MT-643 AGRICULTURAL HAULER	631x	TC-350	TC-370	TC-380	(TC-360)					
MT-653 DR AGRICULTURAL HAULER	632x	TC-350	TC-370	TC-380	(TC-360)					
MT-643 FIRE TRUCK	641x	TC-350	TC-370	TC-380	(TC-360)					
MT-643 (2-ND GEAR START) FIRE TRUCK	642x	TC-350	TC-370	TC-380	(TC-360)					
MT-653 DR FIRE TRUCK	643x	TC-350	TC-370	TC-380	(TC-360)					
MT-643 TRANSIT COACH	651x	TC-350	TC-370	TC-380	(TC-360)					
MT-643 TRANSIT(COACH (2ND GEAR START)	652x	TC-350	TC-370	TC-380	(TC-360)					
MT-643 INTERCITY, SCHOOL, MOTOR HOME	653x	TC-350	TC-370	TC-380	(TC-360)					
MT-643 INTERCITY, SCHOOL, MOTOR HOME (2ND GR ST)	654x	TC-350	TC-370	TC-380	(TC-360)					
MT-644 GENERAL	711x	TC-494	TC-495	(TC-470)						
MT-644 GENERAL (2ND GEAR START)	712x	TC-494	TC-495	(TC-470)						
MT-644 GENERAL (LU IN 3-4)	713x	TC-494	TC-495	(TC-470)						
MT-644 GENERAL (2ND GEAR START,LU IN 3-4)	714x	TC-494	TC-495	(TC-470)						
MT-644 TRANSIT COACH	715x	TC-494	TC-495	(TC-470)						
MT-644 TRANSIT COACH(2-ND GEAR START)	716x	TC-494	TC-495	(TC-470)						
MT-644 INTERCITY, SCHOOL, MOTOR HOME	717x	TC-494	TC-495	(TC-470)						
MT-644 INTERCITY, SCHOOL, MOTOR HOME (2ND GR ST)	718x	TC-494	TC-495	(TC-470)						
MT-644 EMERGENCY EQUIPMENT	719x	TC-494	TC-495	(TC-470)						
MT-644 TRANSIT COACH (LU IN 3-4)	720x	TC-494	TC-495	(TC-470)						
MT-644 TRANSIT COACH(2-ND GEAR START, LU IN 3-4)	721x	TC-494	TC-495	(TC-470)						
MTB-644	723x	TC-494	TC-495	TC-470						
MTB-644(2ND GEAR START)	724x	TC-494	TC-495	TC-470						
MTB-644 TRANSIT COACH (LU IN 3-4)	725x	TC-494	TC-495	TC-470						
MTB-644 TRANSIT COACH(2-ND GEAR START, LU IN 3-4)	726x	TC-494	TC-495	TC-470						
MTB-644 INTERCITY, SCHOOL, MOTOR HOME	727x	TC-494	TC-495	TC-470						
MTB-644 INTERCITY, SCHOOL, MOTOR HOME (2ND GR ST)	728x	TC-494	TC-495	TC-470						

NOTE: ( ) indicates converter not production released
x = last digit of ta no., depending on converter model:

Model, description	TA no.	x=1	x=2	x=3	x=4	x=5	x=6	x=7	x=8	x=9
MT-654 CR AG. TRACTOR(2ND GR ST)	822x	TC-495	TC-497	(TC-405)	(TC-470)	TC-430				
MT-654 CR AG. HAULER (2ND GR ST)	823x	TC-495	TC-497	(TC-405)	(TC-470)	TC-430				
MT-654 CR	831x	TC-495	TC-497	TC-496	(TC-470)	TC-430				
MT-654 CR (2-ND GEAR START)	832x	TC-495	TC-497	TC-496	(TC-470)	TC-430				
MT-654 CR TRANSIT COACH	833x	TC-495	TC-497	TC-496	(TC-470)	TC-430				
MT-654 CR TRANSIT COACH (2-ND GEAR START)	834x	TC-495	TC-497	TC-496	(TC-470)	TC-430				
MT-654 CR INTERCITY, SCHOOL, MOTOR HOME	835x	TC-495	TC-497	TC-496	(TC-470)	TC-430				
MT-654 CR INTERCITY, SCHOOL, MOTOR HOME (2ND GR ST	836x	TC-495	TC-497	TC-496	(TC-470)	TC-430				
MT-654 CR(4TH & 5TH LOCKUP ONLY)	837x	TC-495	TC-497	TC-496	(TC-470)	TC-430				
MT-654 CR STATIONARY EQUIPMENT	842x	TC-495	TC-496	TC-497		TC-430				
MTB-654CR	851x	TC-495	TC-497	TC-496	(TC-470)	TC-430				
MTB-654CR (2-ND GEAR START)	852x	TC-495	TC-497	TC-496	(TC-470)	TC-430				
MTB-654CR TRANSIT COACH	853x	TC-495	TC-497	TC-496	(TC-470)	TC-430				
MTB-654CR TRANSIT COACH(2-ND GEAR START)	854x	TC-495	TC-497	TC-496	(TC-470)	TC-430				
MTB-654CR INTERCITY, SCHOOL, MOTOR HOME	855x	TC-495	TC-497	TC-496	(TC-470)	TC-430				
MTB-654CR INTERCITY, SCHOOL, MOTOR HOME (2ND GR ST	856x	TC-495	TC-497	TC-496	(TC-470)	TC-430				
V-730 (.875 BEVEL) DIESEL TRANSIT COACH	901x	TC-470	TC-490	(TC-494)	(TC-495)	(TC-496)	(TC-497)	(TC-498)	(TC-499)	
HT-740 TRUCK ECON CALIB,COACH	1111x	TC-470	(TC-490)	TC-495	TC-496	TC-497	(TC-498)	TC-499		
HT-740 TRUCK ECON CAL,COACH,2ND GEAR START	1112x	TC-470	(TC-490)	TC-495	TC-496	(TC-497)	(TC-498)	TC-499		
HT-740 TRUCK ECON CALIB,COACH,RETARDER	1113x	TC-470	(TC-490)	TC-495	TC-496	(TC-497)	(TC-498)	TC-499		
HT-740 GENERAL CALIB (C+LU ALL RANGES)	1114x	TC-470	(TC-490)	TC-495	TC-496	(TC-497)	(TC-498)	TC-499		
HT-740 GENERAL CALIB (C+LU ALL RANGES) RETARDERR	1115x	TC-470	(TC-490)	TC-495	TC-496	(TC-497)	(TC-498)	TC-499		
HT-740 FIRE TRUCK PUMPER	1117x	(TC-470)	(TC-490)	(TC-495)	(TC-496)	(TC-497)	(TC-498)	TC-499		
HT-740 FIRE TRUCK PUMPER RETARDER	1118x	(TC-470)	(TC-490)	(TC-495)	(TC-496)	(TC-497)	(TC-498)	TC-499		
HT-740 TRUCK ECON CAL.,HI TORQUE RISE	1121x	TC-470	(TC-490)	TC-495	TC-496	(TC-497)	(TC-498)	TC-499		
HT-740 TRUCK ECON CAL., HI TORQUE RISE,RETARDER	1123x	TC-470	(TC-490)	TC-495	TC-496	(TC-497)	(TC-498)	TC-499		
HT-740 AGRICULTURAL HAULER (GENERAL CALIB)	1131x	TC-470	(TC-490)	TC-495	TC-496	(TC-497)	(TC-498)	TC-499		
HT-740 OFF HIWAY TRUCK + STATIONARY EQUIP (GEN)	1141x	TC-470	(TC-490)	TC-495	TC-496	(TC-497)	(TC-498)	TC-499		
HT-740 OFF HIGHWAY TRUCK (GENERAL CAL.) W/RET	1142x	TC-470	(TC-490)	TC-495	TC-496	(TC-497)	(TC-498)	TC-499		
HT-740 CRASH TRUCK,CRANE CARRIER	1151x	TC-470	(TC-490)	TC-495	TC-496	(TC-497)	(TC-498)	TC-499		
HT-747 TRANSIT BUS	1161x	TC-470	(TC-490)	TC-495	TC-496	(TC-497)	(TC-498)	TC-499		
HT-754 CR (3.69 LOW GR.)	1213x	TC-470	(TC-490)	TC-495	TC-496	(TC-497)	(TC-498)	TC-499		
HT-754 CR (3.69 LOW GR.) RETARDER	1214x	TC-470	(TC-490)	TC-495	TC-496	(TC-497)	(TC-498)	TC-499		
HT-754 CR (3.69 LOW GR.) 2ND GEAR START	1215x	TC-470	(TC-490)	TC-495	TC-496	(TC-497)	(TC-498)	TC-499		
HT-754 CR (3.69 LOW GR.) 2ND GEAR START, RETARDER	1216x	TC-470	(TC-490)	TC-495	TC-496	(TC-497)	(TC-498)	TC-499		
HT-754 CR (3.69 LOW GR.) CRASH TRUCK,CRANE CARRIER	1222x	TC-470	(TC-490)	TC-495	TC-496	(TC-497)	(TC-498)	TC-499		
HT-754 CR (2ND GEAR START)CRASH TRUCK,CRANE CARRIE	1223x	TC-470	(TC-490)	TC-495	TC-496	(TC-497)	(TC-498)	TC-499		
HT-754 CR AGRICULTURAL TRACTOR(2ND GEAR START)	1231x	TC-470	(TC-490)	TC-495	TC-496	(TC-497)	(TC-498)	TC-499		
HT-754 CR AGRICULTURAL HAULER (2ND GEAR START)	1232x	TC-470	(TC-490)	TC-495	TC-496	(TC-497)	(TC-498)	TC-499		
HT-754 CR OFF HIGHWAY TRUCK+STATIONARY EQUIPMENT	1241x	TC-470	(TC-490)	TC-495	TC-496	(TC-497)	(TC-498)	TC-499		
HT-754 CR OFF HIGHWAY TRUCK W/RETARDER	1242x	TC-470	(TC-490)	TC-495	TC-496	(TC-497)	(TC-498)	TC-499		
HT-754 CR TRANSIT COACH	1251x	TC-470	(TC-490)	TC-495	TC-496	(TC-497)	(TC-498)	TC-499		
HT-754 CR TRANSIT BUS (2ND GEAR START)	1252x	TC-470	(TC-490)	TC-495	TC-496	(TC-497)	(TC-498)	TC-499		
HT-750 DR (GENERAL CALIB)	1311x	TC-470	(TC-490)	TC-495	TC-496	(TC-497)	(TC-498)	TC-499		
HT-750 DR (GENERAL CALIB) RETARDER	1312x	TC-470	(TC-490)	TC-495	TC-496	(TC-497)	(TC-498)	TC-499		
HT-750 DR (HI-TORQUE-RISE CAL.)	1313x	TC-470	(TC-490)	TC-495	TC-496	(TC-497)	(TC-498)	TC-499		
HT-750 DR (HI-TORQUE-RISE CAL.) RETARDER	1314x	TC-470	(TC-490)	TC-495	TC-496	(TC-497)	(TC-498)	TC-499		
HT-750 DR OFF HIWAY TRUCK + STATIONARY EQUIP (GEN)	1321x	TC-470	(TC-490)	TC-495	TC-496	(TC-497)	(TC-498)	TC-499		
HT-750 DR OFF HIGHWAY TRUCKS (GENERAL CAL) W/RET	1322x	TC-470	(TC-490)	TC-495	TC-496	(TC-497)	(TC-498)	TC-499		
HT-750 DR AGRICULTURAL HAULER (GENERAL CALIB)	1331x	TC-470	(TC-490)	TC-495	TC-496	(TC-497)	(TC-498)	TC-499		
HT-750 DR CRASH TRUCK,CRANE CARRIER	1351x	TC-470	(TC-490)	TC-495	TC-496	(TC-497)	(TC-498)	TC-499		
HT-750 DR(DB) NO DISCONNECTS, RETARDER	1361x	TC-470	(TC-490)	TC-495	TC-496	(TC-497)	(TC-498)	TC-499		
HT-750 DR(DB) WITH-DISCONNECTS, RETARDER	1362x	TC-470	(TC-490)	TC-495	TC-496	(TC-497)	(TC-498)	TC-499		
HT-750DR(DB) NO DISCONNECTS	1371x	TC-470	(TC-490)	TC-495	TC-496	(TC-497)	(TC-498)	TC-499		
HT-750DR(DB) WITH DISCONNECTS	1372x	TC-470	(TC-490)	TC-495	TC-496	TC-497	(TC-498)	TC-499		
HT-750DR(DB) NO DISCONNECTS,CRASHTRUCK	1381x	TC-470	(TC-490)	TC-495	TC-496	(TC-497)	(TC-498)	TC-499		
HT-750DR(DB) WITH DISCONNECTS,CRASHTRUCK	1382x	TC-470	(TC-490)	TC-495	TC-496	TC-497	(TC-498)	TC-499		

NOTE: ( ) indicates converter not production released
x = last digit of ta no., depending on converter model:

el, description	TA no.	x=1	x=2	x=3	x=4	x=5	x=6	x=7	x=8	x=9
-2221-1 GENERAL (2,662,,699)	2101x	TT-260	TT-270	TT-240	(TT-230)	TT-220	(TT-250)			
-2221-1 MATERIAL HANDLER (2,662,,699)	2103x	TT-260	TT-270	TT-240	(TT-230)	TT-220	(TT-250)			
-2221-1 HEAVY DUTY EQUIPMENT (2,662,,699)	2104x	TT-260	TT-270	TT-240	(TT-230)	TT-220	(TT-250)			
-2421-1 GENERAL (2,662,,699)	2105x	(TT-464)	TT-465	TT-444	TT-445	TT-425	(TT-424)			
-2421-1 MATERIAL HANDLER (2,662,,699)	2107x	(TT-464)	TT-465	TT-444	TT-445	TT-425	(TT-424)			
-2421-1 HEAVY DUTY EQUIPMENT (2,662,,699)	2108x	(TT-464)	TT-465	TT-444	TT-445	TT-425	(TT-424)			
-2221-1 GENERAL (2,153,,565)	2112x	TT-260	TT-270	TT-240	(TT-230)	TT-220	(TT-250)			
-2421-1 GENERAL (2,153,,565)	2116x	(TT-464)	TT-465	TT-444	TT-445	TT-425	(TT-424)			
-2221-1 GENERAL (3,902,1,024)	2122x	TT-272	TT-262	TT-252	(TT-242)					
-2421-1 GENERAL (3,902,1,024)	2126x	TT-447	TT-426	TT-427	(TT-466)	(TT-467)				
3-2221-1 GENERAL (3,902,1,024)	2201x	TT-272	TT-262	TT-252	(TT-242)					
3-2421-1 GENERAL (3,902,1,024)	2202x	TT-447	TT-426	TT-427	(TT-446)					
3-2221-1 GENERAL (2,662,,699)	2251x	TT-260	TT-270	TT-240	(TT-230)	TT-220	(TT-250)			
3-2421-1 GENERAL (2,662,,699)	2252x	(TT-464)	TT-465	TT-444	TT-445	TT-425	(TT-424)			
T-2221-1 GENERAL (2,029,,736)	2301x	TT-260	TT-270	TT-240	(TT-230)	TT-220	(TT-250)			
T-2221-1 MATERIAL HANDLER (2,029,,736)	2303x	TT-260	TT-270	TT-240	(TT-230)	TT-220	(TT-250)			
T-2221-1 HEAVY DUTY EQUIPMENT (2,029,,736)	2304x	TT-260	TT-270	TT-240	(TT-230)	TT-220	(TT-250)			
T-2421-1 GENERAL (2,029,,736)	2305x	(TT-464)	TT-465	TT-444	TT-445	TT-425	(TT-424)			
T-2421-1 MATERIAL HANDLER (2,029,,736)	2307x	(TT-464)	TT-465	TT-444	TT-445	TT-425	(TT-424)			
T-2421-1 HEAVY DUTY EQUIPMENT (2,029,,736)	2308x	(TT-464)	TT-465	TT-444	TT-445	TT-425	(TT-424)			
T-2221-3 GENERAL (6,611,2,398)	2309x	TT-260	TT-270	TT-240	(TT-230)	TT-220	(TT-250)			
T-2221-3 MATERIAL HANDLER (6,611,2,398)	2312x	TT-260	TT-270	TT-240	(TT-230)	TT-220	(TT-250)			
T-2421-3 GENERAL (6,611,2,398)	2313x	(TT-464)	TT-465	TT-444	TT-445	TT-425	(TT-424)			
T-2421-3 MATERIAL HANDLER (6,611,2,398)	2315x	(TT-464)	TT-465	TT-444	TT-445	TT-425	(TT-424)			
T-2221-3 GENERAL (2,398,,826)	2317x	TT-260	TT-270	TT-240	(TT-230)	TT-220	(TT-250)			
T-2221-3 MATERIAL HANDLER (2,398,,826)	2319x	TT-260	TT-270	TT-240	(TT-230)	TT-220	(TT-250)			
T-2421-3 GENERAL (2,398,,826)	2321x	(TT-464)	TT-465	TT-444	TT-445	TT-425	(TT-424)			
T-2421-3 MATERIAL HANDLER (2,398,,826)	2323x	(TT-464)	TT-465	TT-444	TT-445	TT-425	(TT-424)			
T-2211-3 GENERAL (2,398)	2325x	TT-260	TT-270	TT-240	(TT-230)	TT-220	(TT-250)			
T-2211-3 MATERIAL HANDLER (2,398)	2326x	TT-260	TT-270	TT-240	(TT-230)	TT-220	(TT-250)			
T-2411-3 GENERAL (2,398)	2327x	(TT-464)	TT-465	TT-444	TT-445	TT-425	(TT-424)			
T-2411-3 MATERIAL HANDLER (2,398)	2328x	(TT-464)	TT-465	TT-444	TT-445	TT-425	(TT-424)			
-3420-1 GENERAL (2,516,,699)	2411x	(TT-464)	TT-465	TT-444	TT-445	(TT-424)	TT-425			
-3420-1 GENERAL (2,035,,565)	2412x	(TT-464)	TT-465	TT-444	TT-445	(TT-424)	TT-425			
-3420-1 GENERAL (2,982,,828)	2413x	(TT-426)	(TT-427)	TT-447	(TT-467)	(TT-466)				
-3420-1 GENERAL (2,179,,565)	2414x	(TT-464)	TT-465	TT-444	TT-445	(TT-424)	TT-425			
-3420-1 GENERAL (3,192,,828)	2415x	(TT-426)	(TT-427)	TT-447	(TT-467)	(TT-466)				
-3420-1 MATERIAL HANDLER (2,516,,699)	2431x	(TT-464)	TT-465	TT-444	TT-445	(TT-424)	(TT-425)			
-3420-1 MATERIAL HANDLER (2,035,,565)	2432x	(TT-464)	TT-465	TT-444	TT-445	(TT-424)	(TT-425)			
-3420-1 MATERIAL HANDLER (2,982,,828)	2433x	(TT-426)	(TT-427)	TT-447	(TT-467)	(TT-466)				
-3420-1 MATERIAL HANDLER (2,179,,565)	2434x	(TT-464)	TT-465	TT-444	TT-445	(TT-424)	(TT-425)			
-3420-1 MATERIAL HANDLER (3,192,,828)	2435x	(TT-426)	(TT-427)	TT-447	(TT-467)	(TT-466)				
-3220-1 GENERAL (2,516,,913)	2461x	(TT-230)	(TT-250)	(TT-270)	(TT-220)	(TT-240)	TT-260			
-3420-1 GENERAL (2,516,,913)	2481x	(TT-464)	TT-465	TT-444	TT-445	(TT-424)	(TT-425)			
-3420-1 MATERIAL HANDLER (2,516,,913)	2483x	(TT-464)	TT-465	TT-444	TT-445	(TT-424)	(TT-425)			
-3420-1 HEAVY DUTY EQUIPMENT (2,516,,913)	2484x	(TT-464)	TT-465	TT-444	TT-445	(TT-424)	(TT-425)			
4721-1 GENERAL (2,710,,727)	2501x	TT-645	TT-625	TT-470	TT-465	TT-450	TT-445	(TT-430)	(TT-425)	TT-615
4721-1 MATERIAL HANDLER (2,710,,727)	2503x	TT-645	TT-625	TT-470	TT-465	TT-450	TT-445	(TT-430)	(TT-425)	TT-615
-4821-1 GENERAL (2,581,,692)	2601x	TT-645	TT-625	TT-470	TT-465	TT-450	TT-445	(TT-430)	(TT-425)	TT-615
-4821-1 MATERIAL HANDLER (2,581,,692)	2603x	TT-645	TT-625	TT-470	TT-465	TT-450	TT-445	(TT-430)	(TT-425)	TT-615
-4821-1 COMPACTOR (2,581,,692)	2604x	TT-645	TT-625	TT-470	TT-465	TT-450	TT-445	TT-430	TT-425	
-4821-1 HEAVY DUTY EQUIPMENT (2,581,,692)	2605x	TT-645	TT-625	TT-470	TT-465	TT-450	TT-445	(TT-430)	(TT-425)	TT-615
-4821-1 GENERAL (4,52,1,21)	2651x	TT-625	(TT-646)							

NOTE: ( ) indicates converter not production released
x = last digit of ta no., depending on converter model

Model, description	TA no.	x=1	x=2	x=3	x=4	x=5	x=6	x=7	x=8	x=9
CRT-5633-1 (1.00 DROPBOX) GENERAL	2801x		TC-580	TC-570	TC-560	TC-550	TC-540	TC-530		
CRT-5633-1 (1.00 DROPBOX) DOZER	2806x		TC-580	TC-570	TC-560	TC-550	TC-540	TC-530		
CRT-5633-1 (1.30 DROPBOX) GENERAL	2808x		TC-580	TC-570	TC-560	TC-550	TC-540	TC-530		
CRT-5643 (1.00 DROPBOX) GENERAL(NOT RELEASED)	2901x	(TC-430)	(TC-450)	(TC-470)	TC-476	(TC-490)	(TC-497)			
CRT-5643 (1.00 DROPBOX) DOZER (NOT RELEASED)	2906x	(TC-430)	(TC-450)	(TC-470)	TC-476	(TC-490)	(TC-497)			
CRT-5643 (1.30 DROPBOX) GENERAL (NOT RELEASED)	2908x	(TC-430)	(TC-450)	(TC-470)	TC-476	(TC-490)	(TC-497)			
CLT -754 GENERAL 2ND GEAR START	4611x	TC-470	TC-490	TC-495	TC-496	TC-497	TC-498	TC-499		
CLBT-754 GENERAL 2ND GEAR START	4612x	TC-470	TC-490	TC-495	TC-496	TC-497	TC-498	TC-499		
CLT -754 GENERAL 1ST GEAR START	4615x	TC-470	TC-490	TC-495	TC-496	TC-497	TC-498	TC-499		
CLBT-754 GENERAL 1ST GEAR START	4616x	TC-470	TC-490	TC-495	TC-496	TC-497	TC-498	TC-499		
CLT -754 CRASH TRUCK,CRANE CARRIER 2ND GEAR START	4621x	TC-470	TC-490	TC-495	TC-496	TC-497	TC-498	TC-499		
CLBT-754 CRASH TRUCK,CRANE CARRIER 2ND GEAR START	4622x	TC-470	TC-490	TC-495	TC-496	TC-497	TC-498	TC-499		
CLT -754 CRASH TRUCK,CRANE CARRIER 1ST GEAR START	4625x	TC-470	TC-490	TC-495	TC-496	TC-497	TC-498	TC-499		
CLBT-754 CRASH TRUCK,CRANE CARRIER 1ST GEAR START	4626x	TC-470	TC-490	TC-495	TC-496	TC-497	TC-498	TC-499		
CLT -754 REAR DUMP 2ND GEAR START	4631x	TC-470	TC-490	TC-495	TC-496	TC-497	TC-498	TC-499		
CLBT-754 REAR DUMP 2ND GEAR START	4632x	TC-470	TC-490	TC-495	TC-496	TC-497	TC-498	TC-499		
CLT -754 OIL FIELD UNIT	4641x	TC-470	TC-490	TC-495	TC-496	TC-497	TC-498	TC-499		
CLBT-754 PAN SCRAPER 2ND GEAR START	4761x	TC-470	TC-490	TC-495	TC-496	TC-497	TC-498	TC-499		
CLBT-754 PAN SCRAPER 1ST GEAR START	4765x	TC-470	TC-490	TC-495	TC-496	TC-497	TC-498	TC-499		
CLT -754 AG TRACT(2SPD AUX)+AG HAULER(1SPD AUX)2ND	4781x	TC-470	TC-490	TC-495	TC-496	TC-497	TC-498	TC-499		
CLT -754 AG TRACT(2SPD AUX)+AG HAULER(1SPD AUX)1ST	4785x	TC-470	TC-490	TC-495	TC-496	TC-497	TC-498	TC-499		
CLT -754 AG TRACT(3SPD AUX)+AG HAULER(2SPD AUX)2ND	4791x	TC-470	TC-490	TC-495	TC-496	TC-497	TC-498	TC-499		
CLT -754 AG TRACT(3SPD AUX)+AG HAULER(2SPD AUX)1ST	4795x	TC-470	TC-490	TC-495	TC-496	TC-497	TC-498	TC-499		
CLT -754 (DB) NO DISCONNECTS,GENERAL	4821x	TC-470	TC-490	TC-495	TC-496	TC-497	TC-498	TC-499		
CLBT-754 (DB) NO DISCONNECTS,GENERAL	4822x	TC-470	TC-490	TC-495	TC-496	TC-497	TC-498	TC-499		
CLT -754 (DB) WITH DISCONNECTS,GENERAL	4841x	TC-470	TC-490	TC-495	TC-496	TC-497	TC-498	TC-499		
CLBT-754 (DB) WITH DISCONNECTS,GENERAL	4842x	TC-470	TC-490	TC-495	TC-496	TC-497	TC-498	TC-499		
CLBT-754 (DB) NO DISCONNECTS,PAN SCRAPER	4871x	TC-470	TC-490	TC-495	TC-496	TC-497	TC-498	TC-499		
VCLT-754 (DB) 5.18 LOW-ELEVATOR SCRAPER	4911x		VTC497							
CLBT-5861 (ST,THRU) TRUCKS	5001x					TC-570	TC-590	TC-580	TC-690	
CLBT-5861 (ST,THRU) OIL FIELD UNIT	5003x					TC-570	TC-590	TC-580	TC-690	
CLBT-5861 (1.00 DROPBOX) TRUCKS	5004x					TC-570	TC-590	TC-580	TC-690	
CLBT-5861 (1.00 DROPBOX) OIL FIELD UNIT	5006x					TC-570	TC-590	TC-580	TC-690	
CLBT-5861 (ST,THRU) PAN SCRAPER	5007x					TC-570	TC-590	TC-580	TC-690	
CLBT-5861 (1.00 DROPBOX) PAN SCRAPER	5009x					TC-570	TC-590	TC-580	TC-690	
CLT-5861 (ST,THRU) AGRICULTURAL TRACTOR	5015x					TC-570	TC-590	TC-580	TC-690	
CLT-5861 (ST,THRU) AGRICULTURAL TRACTOR (2SPD AUX)	5016x					TC-570	TC-590	TC-580	TC-690	
CLT-5861 (1.00 DROPBOX) AGRICULTURAL TRACTOR	5017x					TC-570	TC-590	TC-580	TC-690	
CLBT-5961 (ST,THRU) TRUCKS	5051x	TC-690	TC-680							
CLBT-5961 (ST,THRU) OIL FIELD UNIT	5053x	TC-690	TC-680							
CLBT-5961 (1.00 DROPBOX) TRUCKS	5054x	TC-690	TC-680							
CLBT-5961 (1.00 DROPBOX) OIL FIELD UNIT	5056x	TC-690	TC-680							
CLBT-5961 (ST,THRU) PAN SCRAPER	5057x	TC-690	TC-680							
CLBT-5961 (1.00 DROPBOX) PAN SCRAPER	5059x	TC-690	TC-680	TC-560						
VCLBT-5961 (ST,THRU) ELEV. SCRAPER	5061x	VTC690								
VCLBT-5961 (1.00 DROPBOX) ELEV. SCRAPER	5063x	VTC690								
CLT-5961 (ST,THRU) AGRICULTURAL TRACTOR	5069x	TC-690	TC-680							
CLT-5961 (ST,THRU) AGRICULTURAL TRACTOR (2SPD AUX)	5070x	TC-690	TC-680							
CLT-5961 (1.00 DROPBOX) AGRICULTURAL TRACTOR	5071x	TC-690	TC-680							
CLBT-6061 TRUCKS	6001x	TC-690	TC-680							
CLBT-6061 OIL FIELD UNIT	6003x	TC-690	TC-680							
CLBT-6061 AGRICULTURAL TRACTOR	6005x	TC-690	TC-680							
CLBT-6061 AGRICULTURAL TRACTOR (2SPD AUX)	6006x	TC-690	TC-680							
DP-8962 TRUCKS	8001x	TC-840	TC-860	TC-880	TC-890					
DP-8962 OIL FIELD UNIT	8003x	TC-840	TC-860	TC-880	TC-890	TC1070				
DP-8962 AGRICULTURAL TRACTOR	8005x	TC-840	TC-860	TC-890	TC-880					
CLBT-9680 TRUCKS	9001x	TC1060	TC1070							
CLBT-9686 OIL FIELD FRACTURING EQUIP.	9003x	TC1060	TC1070	TC1080						
CLT-9880 OIL FIELD FRACTURING EQUIP.	9503x		TC1070	TC1080						

9. **TRANSMISSION—MECHANICAL FILE NUMBERS**—Mechanical transmissions may be specified by the SCAAN File Number shown in the table. The alphanumeric model number may also be used to select a mechanical transmission; however, the user must first enter the term "MECH". After entering MECH the user may enter Fuller, RT910, or 10 spd, etc. All of these things would result in the program leading the user to mechanical transmission(s) meeting that description.

As with the DDA transmissions, the user should input the mechanical transmission file number for maximum program efficiency.

SCAAN File No	No Speeds	Max. lbft	Transmission
801100	5	1150	FULLER T-11605A
801110	5	1150	FULLER T-11605B
801120	5	1150	FULLER T-11605F
801130	5	1150	FULLER T-11605C
801132	5	1150	FULLER T-11605D
801135	5	1150	FULLER T-11605M
@ 801140	5	1100	FULLER T-905J
@ 801150	5	1100	FULLER T-905H
@ 801160	5	1100	FULLER T-905M
@ 801170	5	1100	FULLER T-905P
@ 801180	5	1100	FULLER TO-905A
801185	5	1150	FULLER TO-11605A
@ 801190	5	1100	FULLER TO-905B
801195	5	1150	FULLER TO-11605B
@ 801200	5	1100	FULLER TO-905C
801203	5	1150	FULLER TO-11605C
@ 801205	5	1100	FULLER TO-905D
@ 801210	5	1100	FULLER TO-905F
801215	5	1150	FULLER TO-11605D
801550	5	1400	FULLER RTO-14615 deep
801552	5	1400	FULLER RT-14615 deep
801562	5	1150	FULLER RT-11615 deep
@ 801220	6	1100	FULLER RT-906
801225	6	1150	FULLER T-11606
@ 801230	6	1100	FULLER T-955AL
@ 801240	6	1100	FULLER T-955GL
@ 801250	6	1100	FULLER TO-955AL
@ 801252	6	1100	FULLER TO-955DL
@ 801261	6	1100	FULLER T-1056AA
@ 801270	7	1100	FULLER T-955ALL
@ 801280	7	1100	FULLER TO-955ALL
@ 801290	7	1100	FULLER TO-955DLL
801540	7	1150	FULLER T-11607A
801545	7	1150	FULLER T-11607B
801291	8	1400	FULLER RT-14608
@ 801292	8	1100	FULLER RT-9508
801293	8	1150	FULLER RT-11608
@ 801294	8	1150	FULLER RTO-1157DL
801295	8	1150	FULLER RTO-11607L
@ 801300	9	1100	FULLER RT-9509A
801305	9	1150	FULLER RTO-11609B
@ 801310	9	1100	FULLER RTO-9509A
801315	9	1400	FULLER RTO-14609B
@ 801320	9	1100	FULLER RTO-9509B
@ 801325	9	1150	FULLER RT-11509
801326	9	1150	FULLER RT-11609A
@ 801327	9	1150	FULLER RTO-11509
801329	9	1150	FULLER RTO-11607LL
@ 801330	9	1400	FULLER RT-12509
@ 801331	9	1150	FULLER RTO-1157DLL
801332	9	1150	FULLER RTO-11609A
801333	9	1400	FULLER RT-14609A
@ 801340	9	1400	FULLER RTO-12509
801352	10	645	FULLER RT-6610
801355	10	645	FULLER RTO-6610
@ 801360	10	1100	FULLER RT-910
801365	10	1150	FULLER RTO-11608LL
@ 801370	10	1100	FULLER RTO-910
801375	10	1400	FULLER RTO-14608LL
@ 801380	10	1100	FULLER RTO-958LL
801385	9	1400	FULLER RTO-14609A
@ 801390	10	1150	FULLER RT-1110
801395	10	1150	FULLER RT-11610
@ 801400	10	1150	FULLER RTO-1110
801405	10	1150	FULLER RTO-11610
@ 801410	10	1400	FULLER RT-12510
801415	10	1400	FULLER RT-14610
@ 801420	10	1400	FULLER RTO-12510
@ 801422	10	1400	FULLER RTO-1258LL
801425	10	1400	FULLER RTO-14610
801551	10	1400	FULLER RTO-14615 high
801553	10	1400	FULLER RT-14615 high
801563	10	1150	FULLER RT-11615 high
801600	12	1400	FULLER RTO-14615
801432	13	645	FULLER RT-6613
801442	13	645	FULLER RTO-6613
@ 801450	13	1100	FULLER RT-9513
801455	13	1100	FULLER RT-11613
@ 801460	13	1100	FULLER RTO-9513
801465	13	1150	FULLER RTO-11613
@ 801470	13	1100	FULLER RTOO-9513
801475	13	1150	FULLER RTOO-11613
801476	13	1400	FULLER RTOO-14613
@ 801480	13	1400	FULLER RT-12513
801485	13	1400	FULLER RT-14613
@ 801490	13	1400	FULLER RTO-12513
801495	13	1400	FULLER RTO-14613
@ 801500	15	1100	FULLER RT-915
@ 801510	15	1100	FULLER RTO-915
801515	15	1150	FULLER RTO-11615
@ 801520	15	1400	FULLER RT-12515
@ 801530	15	1400	FULLER RTO-12515
801554	5	500	SPICER 5552-A
801555	5	500	SPICER 5552-B
801556	5	500	SPICER 5552-C
801557	5	500	SPICER 5552-D
801561	5	500	SPICER 5852-A
801560	5	550	SPICER CM 5510-2A
@ 802100	5	500	SPICER 5052-A
@ 802101	5	500	SPICER 5052-B
@ 802102	5	500	SPICER 5052-C
@ 802103	5	500	SPICER 5052-D
802110	5	1300	SPICER 1352-A
802122	5	600	SPICER 6052-A
802132	5	600	SPICER 6052-B
802142	5	600	SPICER 6052-D
802152	5	725	SPICER 6252-B
802162	5	650	SPICER 6052-C
@ 802170	5	625	SPICER 6852-S
802182	5	725	SPICER 6253-B
@ 802192	5	725	SPICER 6253-A
802200	5	1400	SPICER 1452-A
802210	5	1400	SPICER 1453-A
@ 802220	5	500	SPICER 5252-A
@ 802230	5	1300	SPICER 1253-B
802240	6	1400	SPICER 1362-A
802250	6	1400	SPICER 1362-B
802260	6	1400	SPICER 1362-C
@ 802265	6	1300	SPICER 1062-D
@ 802270	6	1000	SPICER 1006-2A
@ 802280	6	1300	SPICER 1262-A
802290	6	1400	SPICER 1463-A
@ 802300	6	1300	SPICER 1263-B
802310	7	1200	SPICER 1207-2A
802320	7	1300	SPICER 1372-A
802322	7	1300	SPICER 1373-A
802330	7	1200	SPICER 1207-2B
802340	7	1200	SPICER 1207-3A
@ 802350	7	1300	SPICER 1107
@ 802360	7	1050	SPICER 1272-A
802370	10	1300	SPICER 1310-2A
@ 802380	10	1300	SPICER 1010-3A
@ 802385	10	1300	SPICER 1010-3B
801558	1	1400	SPICER 1420-3B off hwy
@ 802390	12	1000	SPICER 1020-2A
@ 802400	12	1000	SPICER 1020-3A
802402	12	1400	SPICER 1412-3A
801559	12	1400	SPICER 1420-3B on hwy
802410	14	1400	SPICER 1414-2A
802420	14	1400	SPICER 1414-3A
@ 802430	16	950	SPICER 8516-2A
@ 802440	16	950	SPICER 8516-3B
@ 802450	16	950	SPICER 8516-3E
@ 802460	16	1000	SPICER 8716-2A
@ 802470	16	1000	SPICER 8716-3B
@ 802480	16	1000	SPICER 8716-3E
803100	5	325	NEW PROCESS NP-542-L2
803101	5	325	NEW PROCESS NP-542-FL
803102	5	375	NEW PROCESS NP-542-FD
804100	5	350	CLARK 280V
804110	5	350	CLARK 280VO
804120	5	350	CLARK 282V
804121	5	380	CLARK 282VHD
804130	5	350	CLARK 285V
804131	5	380	CLARK 285VHD
804140	5	350	CLARK 288V
804150	5	350	CLARK 289V
804160	5	490	CLARK 390V
804170	5	490	CLARK 397V
805010	4	300	CHEVROLET CH-465

@ transm may no longer be in production

10. CONVERTER SELECTION GUIDELINES

Proper converter selection for a specific engine and transmission is dependent on such factors as vocation, engine torque characteristics, transmission configuration, and vehicle performance requirements. SCAAN will evaluate these factors and make the proper converter selection automatically. In general, this selection process identifies a converter that:

- Provides maximum output torque without exceeding transmission ratings.
- Keeps engine operating above its peak torque speed under full throttle conditions.
- Has sufficient capacity to insure proper transmission shift characteristics and optimum performance throughout its speed ratio range.

When the user specifies a converter, SCAAN still uses these basic guidelines to check its acceptability. The specific evaluation is included on the SCAAN summary. If any of the match guidelines are violated, the user is alerted while the data is being inputted.

Typical SCAAN responses for these violations are:

(XXX) 700 LB. FT. TURBINE TORQUE EXCEEDS MAX. RATING OF 675 LB. FT.

(XX) 1275 RPM MIN ENG. SPEED BELOW 1400 RPM PEAK TORQUE RPM

(XX) 0.788 SPEED RATIO AT GOV. ENG. RPM IS OUTSIDE RANGE 0.915 to 1.00

(XX) ENG. GOV. RPM (CONV) OCCURS AT 1217 TURB RPM – MUST BE AT LEAST 1474

Note that the turbine torque line is preceeded with three X's indicating a major violation which results in a rejected application summary. The other notes deal with transmission perfomance guideline violations which are designated by two X's. Resolution of these issues may require review with Transmission Application Engineering; however, there are adjustments the user can try in order to obtain a satisfactory converter match.

The turbine torque can be reduced by selecting a converter with lower stall torque ratio or by using a smaller engine. In a similar manner the engine peak torque speed violation can be avoided by selecting a converter with less capacity (i.e. TC 470 instead of TC 490). If the higher capacity converter is needed to satisfy other performance requirements, the minimum operating speed guideline should be reviewed with the engine manufacturer.

The last two notes are warnings that the converter selected may not have sufficient capacity to insure proper shift characteristics and best high speed perfomance. For transmissions that do not have lockup (AT 545, CRT 5000, etc.) the engine governed point should fall above a specified converter speed ratio. Most transmissions with lockup (CLBT 5000, DP 8961, etc.) use a similar check only in terms of converter turbine speed at the engine governed point compared to a specific turbine speed. When a selected converter fails to meet the governed point capacity check (speed ratio or turbine speed) it can usually be corrected by either increasing engine governed speed or using a higher capacity converter.

11. **VEHICLE – STANDARD FACTORS**—The vehicle data table shows standard factors for each vocation. Most may be modified by the user if required for the vehicle performance study; however, the SCAAN summary sheet will revert to using the standard values whenever they are part of the calculation. This gives the SCAAN summary a common baseline and prevents manipulation of these factors to meet vehicle performance requirements.

Column headings are:

Air Resistance Coefficient

Road Surface Factor

Percent Rolling Resistance

Acceleration Traction Limit

Gross Vehicle Weight or Gross Combined Weight

Vehicle Frontal Area or Height/Width

Percent Weight on Drive Wheels

STANDARD VEHICLE DATA

File no	Vocation	air res coeff	surf fact	% r res	acc tr lm	veh wt	h/w area	% [illegible]
1010	INDUSTRIAL POWER PACKAGE	0.8500		2.00		GVW	A	
2110	SHORT HAUL TRACTOR/TRAILER	0.8000/0.6400	1.00			GCW	H/W	
2121	LINE HAUL- EASTERN N.A.	0.8000/0.6400	1.00			GCW	H/W	
2122	LINE HAUL- WESTERN N.A.	0.8000/0.6400	1.00			GCW	H/W	
2123	LINE HAUL- EUROPE	0.8000/0.6400	1.00			GCW	H/W	
2130	MOTOR HOME	0.5500	1.00			GVW	H/W	
2140	INTERCITY BUS	0.4500	1.00			GVW	H/W	
2150	CAR HAULER	0.8500	1.00			GCW	H/W	
2160	TRUCK- ONE-WAY RENTAL	0.7000/0.6000	1.00			GVW	H/W	
2210	SCHOOL BUS	0.5500	1.00			GVW	H/W	
2221	TRANSIT COACH- U.S.	0.5500	1.00			GVW	H/W	
2222	MULTIPURPOSE COACH- EUROPE	0.5500	1.00			GVW	H/W	
2230	LIQUID DELIVERY- STRAIGHT TRUCK	0.7000/0.6000	1.00			GVW	H/W	
2240	VAN BODY- STRAIGHT TRUCK	0.7000/0.6000	1.00			GVW	H/W	
2310	TRAILER SPOTTER	0.7000	1.00			GCW	H/W	
2320	DOCK SPOTTER	0.7000	1.00			GCW	H/W	
2400	TOW TRACTOR AIRCRAFT/HARD SURFACE	0.7000	1.00			GCW	H/W	
2500	BAGGAGE TOW TRUCK	0.7000	1.00			GCW	H/W	
2600	SPECIAL SNOW PLOW/BLOWER	0.8000	1.00			GVW	H/W	
2710	FIRE TRUCK- PUMPER	0.8000	1.00			GVW	H/W	
2720	FIRE TRUCK- NON-PUMPER	0.8000	1.00			GVW	H/W	
3111	DUMP TRUCK- PUBLIC SERVICES	0.8000	1.00			GVW	H/W	
3112	DUMP TRUCK- ON/OFF HIGHWAY	0.8000	1.00			GVW	H/W	
3121	TRANSIT MIX- REAR DISCHARGE	0.8000	1.00			GVW	H/W	
3122	TRANSIT MIX- FRONT DISCHARGE	0.8000	1.00			GVW	H/W	
3130	CONSTRUCTION MATERIAL TRUCK	0.8000	1.00			GVW	H/W	
3140	MOBILE BACKHOE- ON/OFF HIGHWAY	0.8000	1.00			GVW	A	
3211	REFUSE PACKER- ON HIGHWAY	0.8000	1.00			GVW	H/W	
3212	REFUSE PACKER- CONVENTIONAL	0.8000	1.00			GVW	H/W	
3213	REFUSE PACKER-ROLL-OFF	0.8000	1.00			GVW	H/W	
3220	FARM TRUCK	0.8000	1.00			GVW	H/W	
3310	CRANE CARRIER- LIGHT (UP TO 132275 LB)	0.8500	1.00			GVW	H/W	
3320	CRANE CARRIER- HEAVY (ABOVE 132275 LB)	0.8500	1.00			GVW	H/W	
3400	OIL FIELD SERVICING RIG	0.8500	1.00			GVW	H/W	
3510	PUBLIC UTILITY- SINGLE AXLE	0.8000	1.00			GVW	H/W	
3520	PUBLIC UTILITY- DUAL AXLE	0.8000	1.00			GVW	H/W	
3530	PUBLIC UTILITY- ALL-WHEEL DRIVE	0.8000	1.00			GVW	H/W	
3600	TRACTOR/TRAILER- ON/OFF HIGHWAY	0.8000	1.00			GCW	H/W	
3700	HEAVY EQUIP TRANSPORTER TRACTOR/TRAILER	0.8000	1.00			GCW	H/W	
3800	STRADDLE CARRIER	0.8500	1.00			GVW	H/W	
3900	CRASH TRUCK	0.8000	1.00		0.600	GVW	H/W	
4011	PAN SCRAPER	0.8500		2.00		GVW	A	
4014	ELEVATOR SCRAPER	0.8500		2.00		GVW	A	
4020	REAR DUMP	0.8500		2.00		GVW	A	
4030	4-WHL DR PRIME MOVER/TOW TRACTOR	0.8500		2.00		GCW	A	
4040	UNDERGROUND MINE HAUL	0.8500		2.00		GVW	A	
4050	BOTTOM DUMP	0.8500		2.00		GCW	A	
5110	WHEEL LOADER	0.8500		2.00		GVW	A	100.0
5120	LOADER-BACKHOE	0.8500		2.00		GVW	A	
5210	FORK LIFT- HARD SURFACE	0.8500		2.00		GVW	A	
5220	FORK LIFT- ROUGH TERRAIN	0.8500		2.00		GVW	A	100.0
5230	LOG HANDLER	0.8500		2.00		GVW	A	
5240	SKIDDER	0.8500		2.00		GVW	A	100.0
5310	COMPACTOR-SANITARY LANDFILL	0.8500		2.00			A	100.0
5320	COMPACTOR-SOIL COMPACTION	0.8500		2.00			A	100.0
5330	ROLLER- DRUM/RUBBER TIRE	0.8500		2.00		GVW	A	
5400	WHEELED DOZER	0.8500		2.00		GVW	A	100.0
5500	TRACKED DOZER	0.8500		4.00		GVW	A	100.0
5600	MOBILE CRANE- ROUGH TERRAIN	0.8500		2.00		GVW	A	100.0
6100	OIL FIELD PUMPING AND DRILLING							
6200	HOIST/WINCH							
6300	AUGER							
6400	LOCOMOTIVE RAIL EQUIP.	0.5500		0.30			A	
6500	AGRICULTURAL TRACTOR	0.8500		6.00	0.700	GVW	A	
6600	AGRICULTURAL SPREADER/SPRAYER	0.8500		4.60	0.400	GVW	A	
6700	AGRICULTURAL HAULER	0.8500		3.00	0.700	GVW	A	

12. **VEHICLE — DRIVELINE COMPONENTS**—The following tables show standard and optional driveline components for the various vocations. The efficiency of these driveline components are listed below:

Type	component:	Efficiency	
1	TWIN POWER PACKAGE		
2	PROPELLER SHAFT	98.00	
3	CUSTOMER SUPPL. DROPBOX	97.00	
4	WHEEL PLANETARY	95.00	
5	BULL AND PINION	95.00	
6	LUBRICATED SILENT CHAIN	98.00	
7	LUBRICATED ROLLER CHAIN	96.00	
8	EXPOSED ROLLER CHAIN	90.00	
9	RIGHT ANGLE DRIVE	98.00	
10	MULTI-SPEED AUXILIARY	95.00	(for reduction/overdrive ratio)
	MULTI-SPEED AUXILIARY	97.00	(for 1:1 ratio)
11	SINGLE AXLE	96.00	
12	SINGLE AXLE	94.00	
13	SINGLE AXLE PLUS TAG	96.00	
14	SINGLE 2-SPEED AXLE	94.00	(low)
	SINGLE 2-SPEED AXLE	96.00	(high)
15	TANDEM AXLE	92.00	
16	TANDEM AXLE	90.00	
17	TANDEM AXLE PLUS TAG	92.00	
18	TANDEM AXLE PLUS TAG	90.00	
19	ALL WHEEL DRIVE	94.00	
20	ALL WHEEL DRIVE	92.00	
21	TANDEM 2-SPEED AXLE	90.00	(low)
	TANDEM 2-SPEED AXLE	92.00	(high)

STANDARD DRIVELINE COMPONENTS

File No	match type	component type: (see page 44) 1	2	3	4	5	6	7	8	9	10	11	12	13	14	15	16	17	18	19	20	21
1010	AUTOM	*	*	*	*	*	*			*	*		*				*				*	
2110	AUTOM		X									X		*	*	*						*
2121	AUTOM		X									*		*	*	X						*
2122	AUTOM		X									*		*	*	X						*
2123	AUTOM		X									*		*	*	X						*
2130	AUTOM		X									X		*		*						
2140	AUTOM		X									*		X	*							
2150	AUTOM		X									*		*	*	X						*
2160	AUTOM		X									X			*							
2210	AUTOM		X									X										
2221	AUTOM		X									X		*								
2222	AUTOM		X									X		*	*							
2230	AUTOM		X									X		*	*	*						*
2240	AUTOM		X									X			*	*						
2310	AUTOM		X									X		*	*	*						*
2320	AUTOM		X									X		*	*	*						*
2400	AUTOM	*	X								*	X				*				*		
2500	AUTOM		X									X										
2600	AUTOM		X								*	X			*	*				*		*
2710	AUTOM		X								*	X				*				*		*
2720	AUTOM		X								*	X				*				*		
3111	AUTOM		X								*	X			*	*		*		*		*
3112	AUTOM		X								*	*			*	X		*		*		*
3121	AUTOM		X								*					X		*		*		*
3122	AUTOM		X								*					X		*		*		*
3130	AUTOM		X								*	*			*	X		*		*		*
3140	AUTOM		X								*	*	*			X			*			*
3211	AUTOM		X									X			*	*						
3212	AUTOM		X	*							*	*			*	X						*
3213	AUTOM		X	*							*	*			*	X						*
3220	AUTOM		X								*	X			*	*				*		*
3310	AUTOM		X	*	*						*		*		*		X		*		*	*
3320	AUTOM		X	*	*						*		*		*		X		*		*	*
3400	AUTOM		X	*							*		*		*		X		*			*
3510	AUTOM		X									X			*							
3520	AUTOM		X								*					X				*		*
3530	AUTOM		X								*					X				*		*
3600	AUTOM		X								*	*			*	X						*
3700	AUTOM	*	X		*						*	*			*	X				*		*
3800	AUTOM	*	X	*			*	*	*		*		X		*							
3900	AUTOM	*	X	*							*	*			*	*				X		*
4011	AUTOM		X	*	X								X									
4014	AUTOM		X	*	X								X									
4020	AUTOM		X	*	X						*		X				*				*	*
4030	AUTOM		X	*	X						*										X	
4040	AUTOM		X		X						*		X								*	
4050	AUTOM		X		X						*		X				*					*
5110	DROOP		X		X																X	
5120	DROOP		X		X								*								X	
5210	AUTOM		X		X								X									
5220	AUTOM		X		X																X	
5230	AUTOM		X		X																X	
5240	AUTOM		X	*	X						*										X	
5310	AUTOM		X		X																X	
5320	AUTOM		X		X																X	
5330	AUTOM		X				*						X									
5400	AUTOM		X		X																X	
5500	AUTOM				*	X				X												
5600	AUTOM		X		X						*										X	
6100	AUTOM																					
6200	AUTOM																					
6300	AUTOM																					
6400	AUTOM	*	X	*		*	*				*		X								*	
6500	AUTOM	*	X		*						*		*		*						X	
6600	AUTOM		X		*						*		X		*		*				*	
6700	AUTOM		X		*						*		X		*		*				*	

In above listing, X indicates standard; * indicates optional

13. **VEHICLE — PERFORMANCE GUIDELINES**—Nearly every vocation in SCAAN has specific performance guidelines. These guidelines; on the following page, are printed on the SCAAN Summary and are compared to the calculated vehicle performance. If the application meets the vehicle performance guidelines, SCAAN prints "O.K." beside that check. If it does not, SCAAN prints a single "X". Not meeting a vehicle performance guideline does not mean that the application is unacceptable. It is a caution that this vehicle does not perform as well as similar vehicles judged by experience to be successful.

SCAAN Performance "Recommendations/Guidelines" are page tabulated by vocation. Column headings are:

Traction Limit at 70% Converter Efficiency — Some vocations require that for a specified traction limit, there be sufficient tractive effort to slip the wheels at 70 percent converter efficiency. This check is based on weight on the drive wheels.

High Floatation Factor — If a vehicle has high flotation tires, then the traction limit (see above) is increased by this factor.

Percent Rolling Resistance at .45 Torque Converter Speed Ratio — SCAAN checks to determine if vehicle will overcome the specified percent rolling resistance at .45 converter speed ratio. (The 40% used for compactors corresponds to 800 lbs./ton rolling resistance.)

Ratio of Tractive Effort/GVW at Converter Stall — This number approximates gross gradeability at stall divided at 100.

Tractive Effort at Converter Stall Divided by Weight on Drive Wheels.

Percent Net Gradeability in First Gear at Governed RPM — In lockup unless only converter is available.

Vehicle Top Geared Speed — Minimum speed vehicle must be geared for in high range at engine governed rpm.

Percent Net Gradeability at Top Speed — This top speed is the **lower** of the above specified top geared speed or the vehicle's actual top geared speed.

Percent Net Gradeability at Converter Stall.

VEHICLE RECOMMENDATIONS/GUIDELINES

File no	Vocation	70%ef tr	hifl lm	%rres fact	stall .45sr	stall te/wt	1 lu te/dw	% gr	seard mph	top sp	stall %gr	% sr
1010	INDUSTRIAL POWER PACKAGE											
2110	SHORT HAUL TRACTOR/TRAILER								55.0	0.25		16.0
2121	LINE HAUL- EASTERN N.A.								55.0	0.25		12.5
2122	LINE HAUL- WESTERN N.A.								55.0	0.25		16.0
2123	LINE HAUL- EUROPE								50.0	0.25		22.0
2130	MOTOR HOME									0.25		
2140	INTERCITY BUS								60.0	0.25		25.0
2150	CAR HAULER								55.0	0.25		16.0
2160	TRUCK- ONE-WAY RENTAL								55.0	0.25		20.0
2210	SCHOOL BUS									0.25		18.0
2221	TRANSIT COACH- U.S.											18.0
2222	MULTIPURPOSE COACH- EUROPE								50.0	0.25		25.0
2230	LIQUID DELIVERY- STRAIGHT TRUCK								55.0	0.25		18.0
2240	VAN BODY- STRAIGHT TRUCK								55.0	0.25		20.0
2310	TRAILER SPOTTER											25.0
2320	DOCK SPOTTER											30.0
2400	TOW TRACTOR AIRCRAFT/HARD SURFACE											
2500	BAGGAGE TOW TRUCK								30.0			16.0
2600	SPECIAL SNOW PLOW/BLOWER	0.200								0.25		
2710	FIRE TRUCK- PUMPER											30.0
2720	FIRE TRUCK- NON-PUMPER											30.0
3111	DUMP TRUCK- PUBLIC SERVICES								55.0	0.25		25.0
3112	DUMP TRUCK- ON/OFF HIGHWAY	0.400	1.10						55.0	0.25		
3121	TRANSIT MIX- REAR DISCHARGE	-.400	1.10						55.0	0.25		
3122	TRANSIT MIX- FRONT DISCHARGE	0.400	1.10						55.0	0.25		
3130	CONSTRUCTION MATERIAL TRUCK	0.400	1.10						55.0	0.25		
3140	MOBILE BACKHOE- ON/OFF HIGHWAY	0.400	1.10						60.0	0.25		
3211	REFUSE PACKER- ON HIGHWAY								55.0	0.25		25.0
3212	REFUSE PACKER- CONVENTIONAL		1.10						55.0	0.25		25.0
3213	REFUSE PACKER-SEVERE LANDFILL	-.400	1.10						55.0	0.25		
3220	FARM TRUCK	-.400	1.10						60.0	0.25		
3310	CRANE CARRIER- LIGHT (UP TO 132275 LB)								55.0	0.25		50.0
3320	CRANE CARRIER- HEAVY (ABOVE 132275 LB)								45.0	0.25		30.0
3400	OIL FIELD SERVICING RIG								55.0	0.25		20.0
3510	PUBLIC UTILITY- SINGLE AXLE								55.0	0.25		
3520	PUBLIC UTILITY- DUAL AXLE								55.0	0.25		32.0
3530	PUBLIC UTILITY- ALL-WHEEL DRIVE	0.400							55.0	0.25		32.0
3600	TRACTOR/TRAILER- ON/OFF HIGHWAY	0.400	1.10						55.0	0.25		25.0
3700	HEAVY EQUIP TRANSPORTER TRACTOR/TRAILER							8.00	55.0	0.25		
3800	STRADDLE CARRIER									0.25		20.0
3900	CRASH TRUCK											55.0
4011	PAN SCRAPER							13.00				
4014	ELEVATOR SCRAPER							10.00				
4020	REAR DUMP							11.00				34.0
4030	4-WHL DR PRIME MOVER/TOW TRACTOR							6.00				
4040	UNDERGROUND MINE HAUL											
4050	BOTTOM DUMP							8.00				
5110	WHEEL LOADER					0.700			20.0			
5120	LOADER-BACKHOE						0.700		20.0			
5210	FORK LIFT- HARD SURFACE	0.220							20.0			
5220	FORK LIFT- ROUGH TERRAIN					0.700						
5230	LOG HANDLER											40.0
5240	SKIDDER					0.700						
5310	COMPACTOR-SANITARY LANDFILL				40.0							
5320	COMPACTOR-SOIL COMPACTION				40.0							
5330	ROLLER- DRUM/RUBBER TIRE								20.0	0.25		20.0
5400	WHEELED DOZER					0.700						
5500	TRACKED DOZER					1.100						
5600	MOBILE CRANE- ROUGH TERRAIN					0.400			20.0	0.25		
6100	OIL FIELD PUMPING AND DRILLING											
6200	HOIST/WINCH											
6300	AUGER											
6400	LOCOMOTIVE RAIL EQUIP.						0.300					
6500	AGRICULTURAL TRACTOR	0.700										
6600	AGRICULTURAL SPREADER/SPRAYER	0.400										
6700	AGRICULTURAL HAULER	0.700										

roduct pdate ulletin

Allison Transmissions

ALLISON CONVERTER ABSORPTION CHART SUMMARY

PUB. NO. 60

DATE November 1983

DETROIT DIESEL ALLISON DIVISION
GENERAL MOTORS CORPORATION
P. O. BOX 894
INDIANAPOLIS, INDIANA 46206
ATTENTION: SALES DEVELOPMENT J5

C-6-PB60—01 3/84

ALLISON CONVERTER

ABSORPTION CHART SUMMARY

The material in this document provides an index for Allison individual converter absorption charts (Sales curves) and a set of composite absorption charts.

Sales Curve Index

This summary references the individual absorption chart (Sales curve) number and latest revision date for Allison commercial converters. It also identifies the stall torque ratio and applicable transmission series for each converter model. Copies of the individual absorption charts (Sales curves) can be obtained by contacting the Transmission Sales Department.

Composite Absorption Charts

These charts depict specific capacity bands for several converter models on a single graph. The data for these composite charts has been extracted from the individual absorption charts and can be used for converter selection and to estimate stall speeds for any engine. Before plotting the engine curve on these charts, deduct the appropriate value from net engine torque:

Industrial Converter Applications

Model	Torque – lb.ft. (N·m)
TC 300	6.5 (8.8)
TC 300	13.0 (17.6)
TC 500	13.0 (17.6)
TC 800	13.0 (17.6)
TC 900 std. oil pump	13.0 (17.6)
TC 900 large oil pump	21.0 (28.5)

Transmission Applications

Torque	Torque – lb.ft. (N·m)
AT 500	4.5 (6.1)
MT 643/653DR	10.0 (13.6)
MT 644/654CR	11.0 (14.9)
V 730	21.0 (28.5)
HT 700 wo/retarder	21.0 (28.5)
HT 700 w/retarder	21.0 (28.5)
CL(B)T 700	33.0 (44.8)
CRT 5000	33.0 (44.8)
CLBT 5000	38.0 (51.5)
CLBT 6061	38.0 (51.5)
DP 8000	46.0 (62.4)
CLBT 9000	46.0 (62.4)
T(R)T 2000	13.0 (17.6)
T(R)T 3000	13.0 (17.6)
T(R)T 4000	23.0 (31.2)

The top of each capacity band has been arbitrarily truncated to help identify converter models.

ALLISON CONVERTER
ABSORPTION CHART SUMMARY
(TC-200, 300, 400)

DATE: 10-12-83

STR	CONVERTER MODEL	SALES CURVE TC-REF	SALES CURVE DATE	INDUSTRIAL PACKAGE	TRANSMISSION AT543	AT545	MT643/6530R	MT644	MT654CR	V730	HT740/754CR/750DR	CL(B)T754	CRT5643
2.00	TC-270	11911	10-7-83			X							
1.76	TC-290	19082	4-27-83			X							
3.09	TC-350	13175	1-04-71	X									
3.09	TC-350	14748	1-11-77		N		X						
2.96	TC-360	18956	7-05-78				N						
2.47	TC-370	13177	1-04-71	X									
2.51	TC-370	17096	7-21-75		X								
2.43	TC-370	14749	1-11-77				X						
2.13	TC-375	18949	4-05-78		X								
1.86	TC-380	15660	1-11-77		X		X						
2.94	TC-405	15994	3-31-77						N				
4.14	TC-410	18731	5-02-77										
3.55	TC-430	6738	6-30-67	X									
3.59	TC-430	18774	6-29-77						X				N
3.19	TC-450	6739	6-30-67	X									N
3.04	TC-470	6740	9-16-74	X				N	N		X	X	N
3.25	TC-470	18805	8-17-77							X			
3.68	TC-476	16663	12-10-74										X
2.56	TC-490	11586	7-05-77								N	X	N
2.51	TC-490	18806	8-17-77							X			
1.93	TC-494	16919	3-22-76					X		N			
2.21	TC-495	12876	7-23-70					X	X	N	X	X	
1.83	TC-496	18771	11-22-77						X	N	X	X	
2.70	TC-497	16424	9-16-74						X	N	N	X	N
2.35	TC-498	16611	1-10-75							N	N	X	
2.09	TC-499	12901	7-20-77							N	X	X	
2.42 1.84	VTC-497	16575	11-18-74						X				

OTE: "N" INDICATES CONVERTER NOT PRODUCTION RELEASED

ALLISON CONVERTER
ABSORPTION CHART SUMMARY
(TC-500, 600, 800, 900, 1000)

DATE: 10-12-83

STR	CONVERTER MODEL	SALES CURVE TC-REF	SALES CURVE DATE	INDUSTRIAL PACKAGE	TRANSMISSION CRT5633	CLBT5861	CLBT5961	CLBT6061	CLBT9680/9686/9880	DP8962	
3.48	TC-530	9745	9-02-77	X	X						
2.64	TC-540	9746	9-02-77	X	X						
3.23	TC-550	9747	9-02-77	X	X						
2.58	TC-560	9748	9-02-77	X	X		X				
3.04	TC-570	9749	9-01-77	X	X	X					
2.81	TC-580	9750	9-01-77	X	X	X					
2.65	TC-590	9751	9-01-77			X					
2.24	TC-680	6900	10-1-82				X	X			
2.57	TC-690	6300	9-02-77			X	X	X			
2.92	TC-840	2139	9-01-70	X							
2.27	TC-840	8310	1-26-74							X	
3.98	TC-850	1664	3-03-70	X							
2.34	TC-860	13276	4-27-71							X	
2.24	TC-880	11173	1-26-74							X	
1.95	TC-890	10000	1-26-74							X	
2.71	TC-940	2006	9-01-70	X							
3.67	TC-950	1271	3-05-70	X							
2.41 1.81	VTC-690	11187	1-26-74				X				
1.82	TC-1060	19022	9-23-81						X		
1.68	TC-1070	19016	12-3-79						X	X	
1.58	TC-1080	19032	11-3-80						X		

NOTE: "N" INDICATES CONVERTER NOT PRODUCTION RELEASED