AIRTRONIC* / AIRTRONIC* M

Espar Heater Systems

Technical Description
Installation Instructions
Operating Instructions
Maintenance Instructions
Troubleshooting and Repair Instructions
Parts List

Espar Products, Inc.
6099A Vipond Drive
Mississauga, Ontario
Canada L5T 2B2

(905) 670-0960
(800) 387-4800 Canada & U.S.A.
(905) 670-0728 Fax

www.espar.com

***AIRTRONIC* D2**
25 2069 05 - 12 Volt
25 2070 05 - 24 Volt

***AIRTRONIC* D2 Camper**
25 2326 05 - 12 Volt

***AIRTRONIC* M D3 Camper**
25 2317 05 - 12 Volt

***AIRTRONIC* M D4**
25 2113 05 - 12 Volt
25 2114 05 - 24 Volt

***AIRTRONIC* M D4S**
25 2144 05 - 12 Volt
25 2145 05 - 24 Volt

***AIRTRONIC* M D4 Camper**
25 2318 05 - 12 Volt

***AIRTRONIC* M D4 Camper Plus**
25 2327 05 - 12 Volt

***AIRTRONIC* M B4**
20 1812 05 - 12 Volt

610-103-0606

06.2006 Subject to Change

Printed in Canada

Table of Contents

		Page
Introduction	Heater Warnings	3
	Introduction	4
	Technical Data	5
	Dimensions	6
	Heater Components	7
Installation Procedures	Heater Location	8
	Heater Mounting	8
	Heater Plate installation	8
	Mounting Pattern	9
	Heater Air Ducting	9
	Ducting Components	9
	Fuel System	10
	Electrical Connections	12
	Exhaust/Intake Connections	13
	Operating Switches	13
Heater Operation	Switch on	14
	Start-Up	14
	Temperature setting	15
	Temperature Control	16
	Switching Off	16
	Controls & Safety Equipment	16
	Operational Flow Chart	16
	Function Diagrams	17
	Schematic ***AIRTRONIC* D2/D4**	18
Maintenance, Troubleshooting & Repairs	Periodic Maintenance	20
	Basic Troubleshooting	20
	Self Diagnostic Troubleshooting	21
	Fuel Quantity Test	25
	Overheat/Flame sensor values	25
	Control and Resistance values	26
	Repair Steps	27
Heater Parts	***AIRTRONIC* D2/D4** -Service Parts Diagram	33/35
	***AIRTRONIC* D2/D4** -Parts List	34/35

Special Notes

Note: Highlight areas requiring special attention or clarification.

Caution: *Indicates that personal injury or damage to equipment may occur unless specific guidelines are followed.*

Warning: Indicates that serious or fatal injury may result if specific guidelines are not followed.

This publication was correct at the time of going to print. However, Espar Inc. has a policy of continuous improvement and reserves the right to amend any specifications without prior notice.

Heater Warnings

Warning To Installer:

Correct installation of this heater is necessary to ensure safe and proper operation.
Read and understand this manual before attempting to install a heater.

⚠ Warning - Explosion Hazard

1. Heater must be turned off while re-fueling.
2. Do not install heater in enclosed areas where combustible fumes may be present.
3. Do not install heaters in engine compartments of gasoline powered boats.

⚠ Warning - Fire Hazard

1. Install heater so it will maintain a minimum distance of 2" from any flammable or heat sensitive material.
2. Install the exhaust system so it will maintain a minimum distance of 2" from any flammable or heat sensitive material.
3. Ensure that the fuel system is intact and there are no leaks.

Failure to follow these instructions could cause fire resulting in serious or fatal injury.

⚠ Warning - Asphyxiation Hazard

1. Route the heater exhaust so that exhaust fumes can not enter any passenger compartments.
2. Ensure an air tight seal will be maintained between the heater and mounting surface and at any exhaust connection points.
3. Ensure that heating air supply is taken from an area where poisonous gases will not be present.
4. If running exhaust components through an enclosed compartment, ensure that it is vented to the outside.

Failure to follow these instructions could cause oxygen depletion resulting in serious or fatal injury.

Direct questions to Espar Heater Systems

Canada & U.S.A. 1-800-387-4800

ATTENTION

Operation with bio-diesel

***AIRTRONIC* D2 / D4**

AIRTRONIC D2 is not certified for use with bio-diesel. Admixtures of bio-diesel up to a magnitude of approx. 5%, as in some countries, are allowed.

ATTENTION

Heating at high altitudes

Up to 1500 meters - unrestricted heating operation is possible

Above 1500 meters - heating operation is in principle possible for short periods, e.g. when crossing a mountain pass of during a brief stop. In cases of extended stays , the fuel supply at the fuel metering pump has to be adapted to high altitude conditions. Please call for special circumstances.

Canada & U.S.A. 1-800-387-4800

Espar 's *AIRTRONIC* bunk heaters

The *AIRTRONIC* D2 is a compact diesel-fired 7,500 BTU/hr air heater, quality engineered to provide a dependable means of space heating. This heater is uniquely designed for inside mounting and ease of installation. The *AIRTRONIC* D4 is a 13,650 BTU/hr air heater for larger bunks.

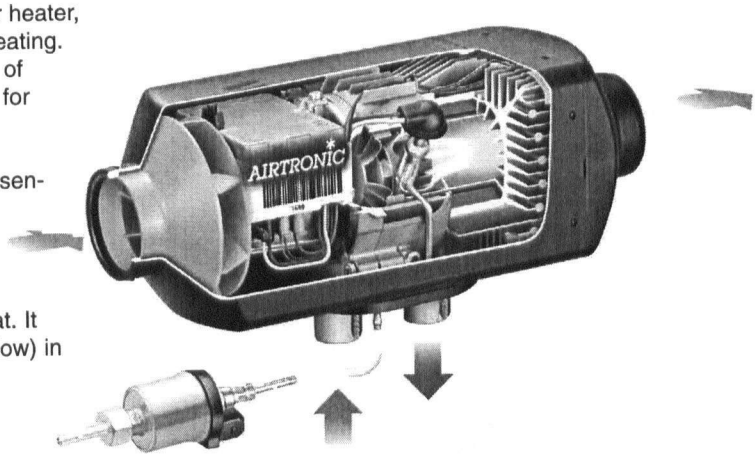

These heaters provide hot air to the interior of vehicles for passenger comfort. Since the heater runs on diesel fuel and 12 or 24 volt power, it is able to provide space heat completely independently of the vehicle engine.

The heater is operated by a rheostat switch or room thermostat. It cycles through four temperature settings (boost-high-medium-low) in order to maintain the desired temperature.

If, in special cases, less heating capacity is required than the heater supplies in the "Low" setting, the heater switches to a "stand-by" setting. Temperature and overheat sensors, and a specially designed heat exchanger are among the safety features which make this heater a safe and dependable unit.

For illustration purposes only

Technical Data

Heater	*AIRTRONIC*			*AIRTRONIC* M			
Version	D2			D4			
Heat Output (±10%)	7,500 BTU/hr Boost (2.2 kW) 6,150 BTU/hr High (1.8 kW) 4,100 BTU/hr Medium (1.2 kW) 2,900 BTU/hr Low (0.85 kW)			13,650 BTU/hr Boost (4.0 kW) 10,200 BTU/hr High (3.0 kW) 6,800 BTU/hr Medium (2.0 kW) 3,400 BTU/hr Low (1.0 kW)			
Current at 12v (±10%)	8.3 amps - Start 2.8 amps - Boost 1.9 amps - High 1.0 amps - Medium 0.7 amps - Low			8.3 amps - Start 3.3 amps - Boost 2.0 amps - High 1.1 amps - Medium 0.6 amps - Low			
Current at 24v (±10%)	4.2 amps/hr - Start 1.4 amps/hr - Boost 1.0 amps/hr - High 0.5 amps/hr - Medium 0.3 amps/hr - Low			4.2 amps/hr - Start 1.7 amps/hr - Boost 1.0 amps/hr - High 0.5 amps/hr - Medium 0.3 amps/hr - Low			
Fuel Consumption (±10%)		U.S. Gal/hr	Litre/hr		U.S. Gal/hr	Litre/hr	
	Boost High Medium Low	0.07 0.06 0.04 0.03	0.28 0.23 0.14 0.10	Boost High Medium Low	0.13 0.10 0.07 0.03	0.51 0.38 0.25 0.13	
Air Flow (±10%)	48 cfm Boost 40 cfm High 27 cfm Medium 19 cfm Low			85 cfm Boost 69 cfm High 50 cfm Medium 30 cfm Low			
Operating Voltage Range	10.5 - 16 vdc at 12 vdc 21 - 32 vdc at 24 vdc			10.5 - 16 vdc at 12 vdc 21 - 32 vdc at 24 vdc			
Overheat Temperature Shutdown (±10%)	240°F (115°C)			240°F (116°C)			
Ambient Operating Temperature	-40°F to 158°F (-40°C to 70°C)			-40°F to 158°F (-40°C to 70°C)			
Weight	6.0 lbs. (2.7 kg)			9.9 lbs. (4.5 kg)			

Note: The heater control unit is equipped with a low voltage cutout to prevent vehicle battery drain and a high voltage cutout to protect heater electrical parts.

* All measurements in millimeters
25.4 mm = 1"

❶ Minimum installation distance (clearance) to open the lid and to dismount the glow pin and the control unit.

❷ Minimum installation distance (clearance) to take in heating air.

Principal Dimensions *AIRTRONIC* D2

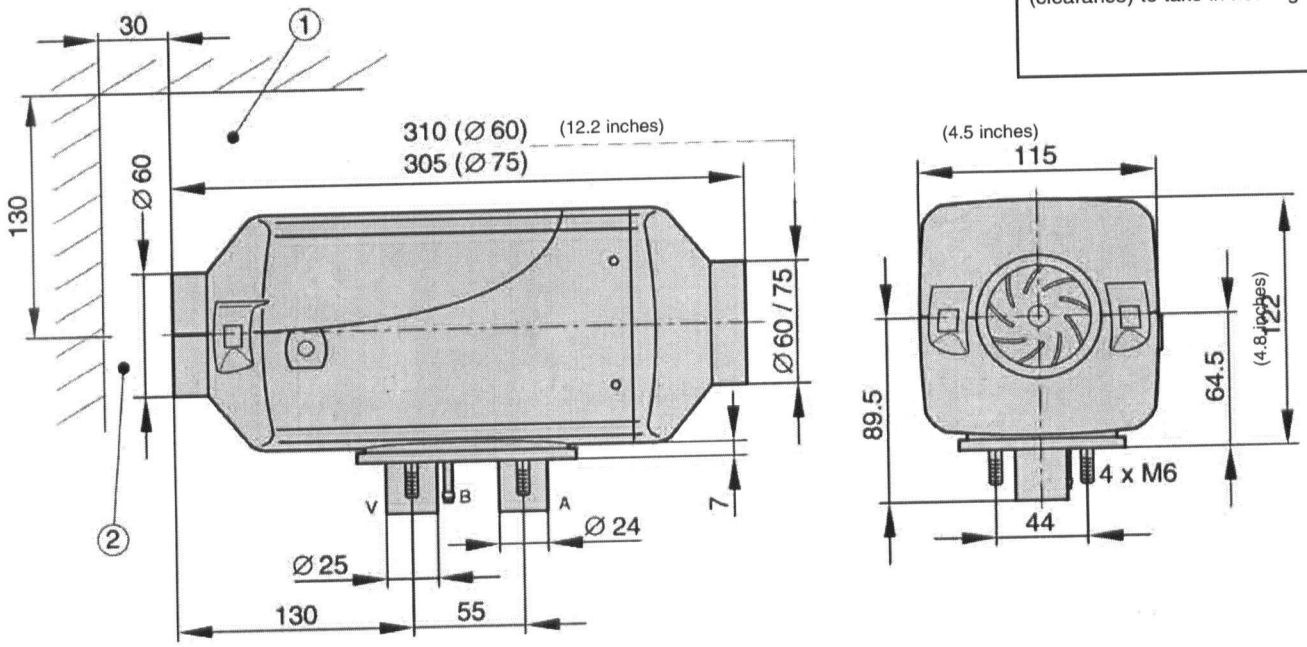

Principal Dimensions *AIRTRONIC* B / D4

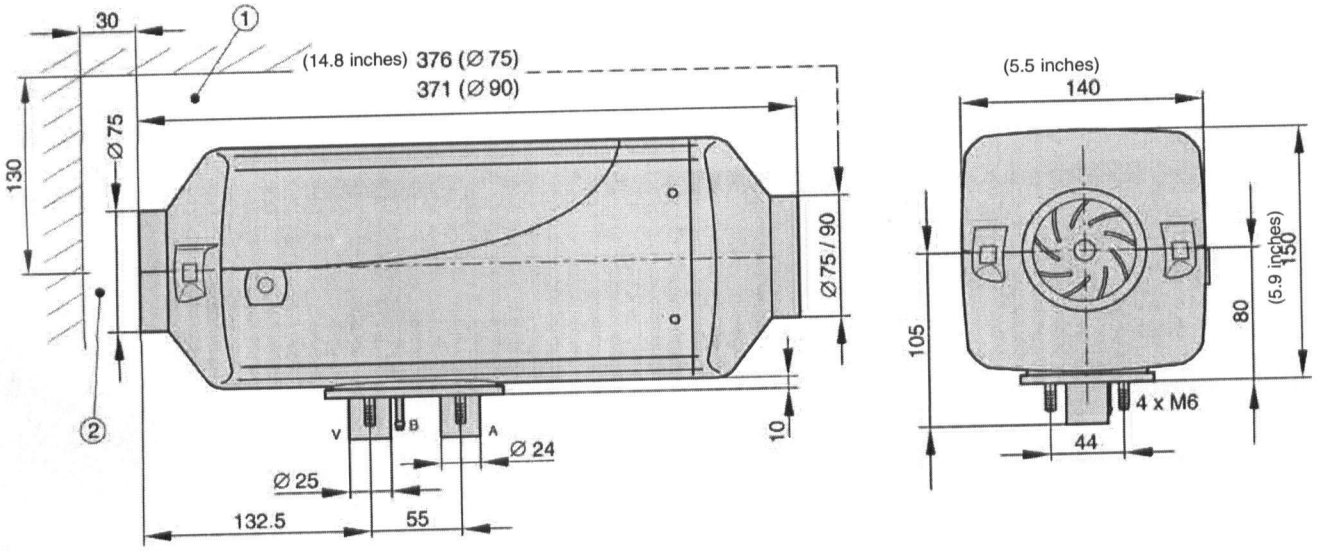

Heater Components

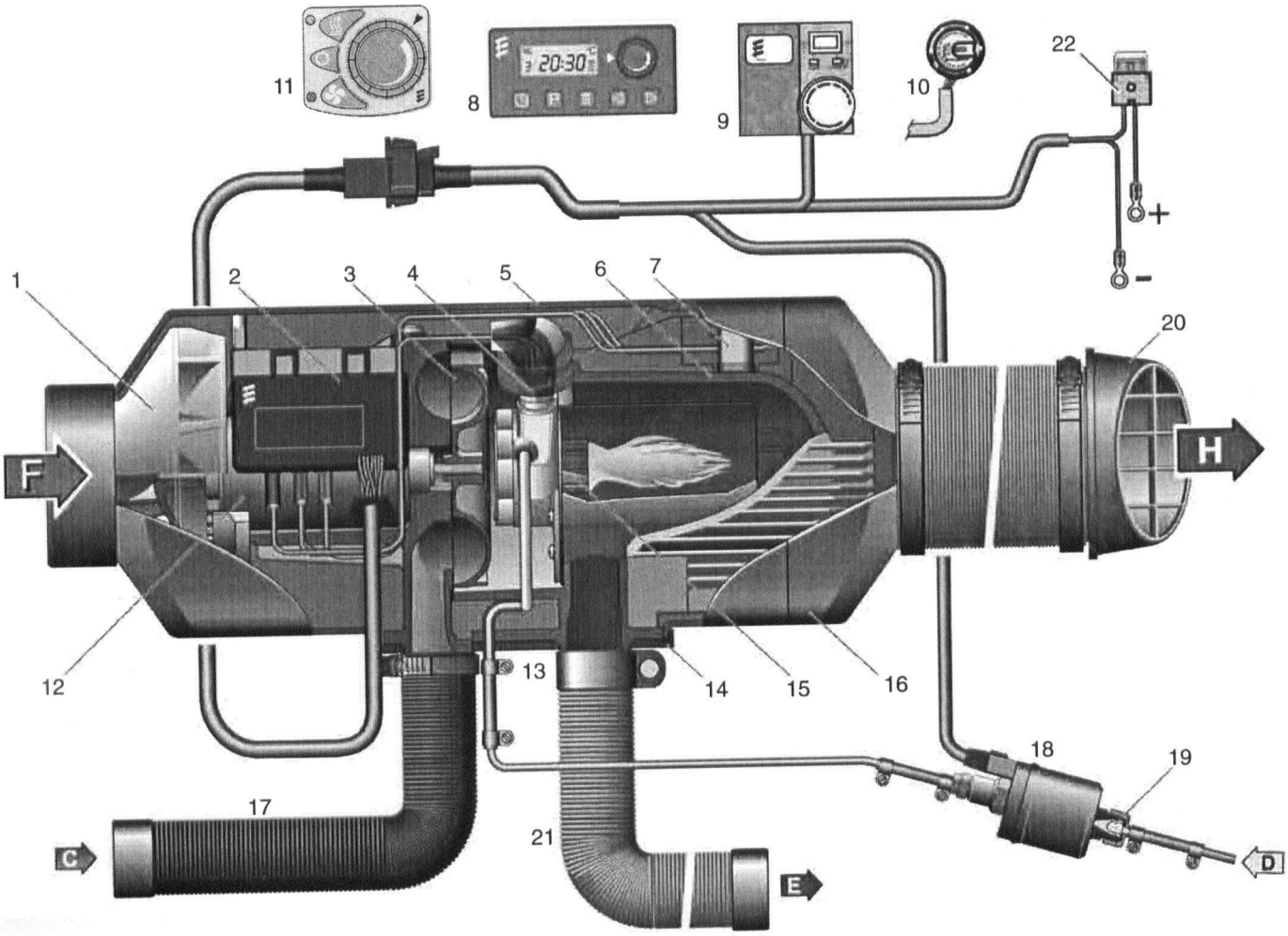

1 Hot Air Blower Wheel
2 Control Unit
3 Combustion Air Blower Wheel
4 Glow Pin
5 Cover
6 Heat Exchanger
7 Overheat/Flame sensor
8 7 Day Timer with Thermostat (optional)
9 Operating Unit (Thermostat)
10 Operating Unit (Rheostat)
11 Mini Controller
12 Blower Motor
13 Fuel Connection
14 Flange Seal
15 Combustion Chamber
16 Hot Air Outlet Hood
17 Combustion Air Intake Hose
18 Fuel Metering Pump
19 Fuel Filter built into FMP
20 Hot Air Output Deflector
21 Flexible Exhaust Pipe
22 Main Fuse: -
AIRTRONIC D2 - 20 A - 12V
AIRTRONIC D4 - 20 A - 12V

C = Combustion Air
D = Fuel Intake from Tank
E = Exhaust
F = Fresh Air Intake
H = Hot Air Output

Heater Location

Depending on the type of vehicle, the best location for mounting the heater will vary. Typically, air heaters are mounted inside tool or luggage compartments. However, the heater may be mounted anywhere inside the vehicle provided you adhere to the following conditions:

- Combustion air intake, exhaust and fuel inlet must be located outside of the vehicle.
- Heater must be mounted on flat horizontal surface providing an air tight seal between heater and vehicle.
- Do not mount the heater outside the vehicle, unless care is taken to protect the heater from the weather. When selecting the location, consider the following:
- Combustion air and exhaust connections.
- Ducting.
- Fuel line connections.
- Electrical connections.

Heater Mounting

A mounting plate and hardware are provided with the truck heater kit.

- Choose heater location.
- Using template, drill and cut center hole. Cut (1) four and one half inch (4 1/2") diameter hole or one rectangular hole four (4") by five (5") inches to accommodate mounting plate and seal. Secure mounting plate to vehicle floor with "Tek" screws provided.
- Use heater flange as a template if not using mounting plate and seal.
- Mount heater on mounting plate with nuts and spring washers provided.
- For ease of installation make the exhaust, combustion air intake and fuel connections at base of heater before mounting the heater into the vehicle. See following pages for instructions and restrictions on exhaust, combustion and fuel hook-ups.

Wiring harness connection, right or left

Wiring harness can be converted to the opposite side of the heater if it makes the installation more practical. To do this you must remove the *AIRTRONIC* cover and then the control unit. On the control unit (underneath) is a semicircular clip protecting the harness. This must be removed. The harness can be moved to the other side of the control unit then reassembled. The grommet on the heater casing (side) must also be taken out and secured into the opposite lower side of heater casing.

Heater Mounting Plate Installation

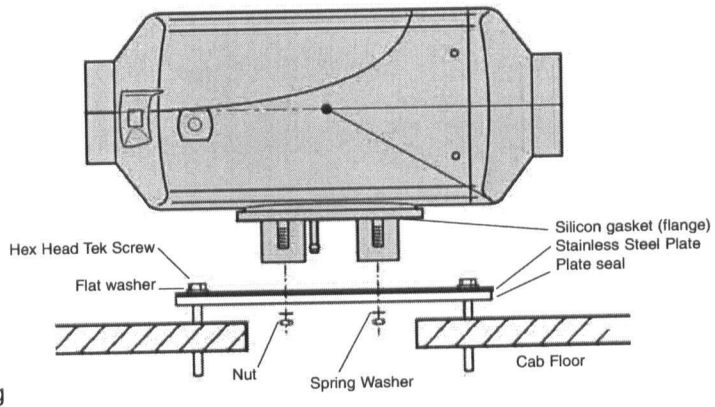

Note: Tighten screws sufficiently to ensure positive seal between mounting plate and mounting surface. Do not over tighten.

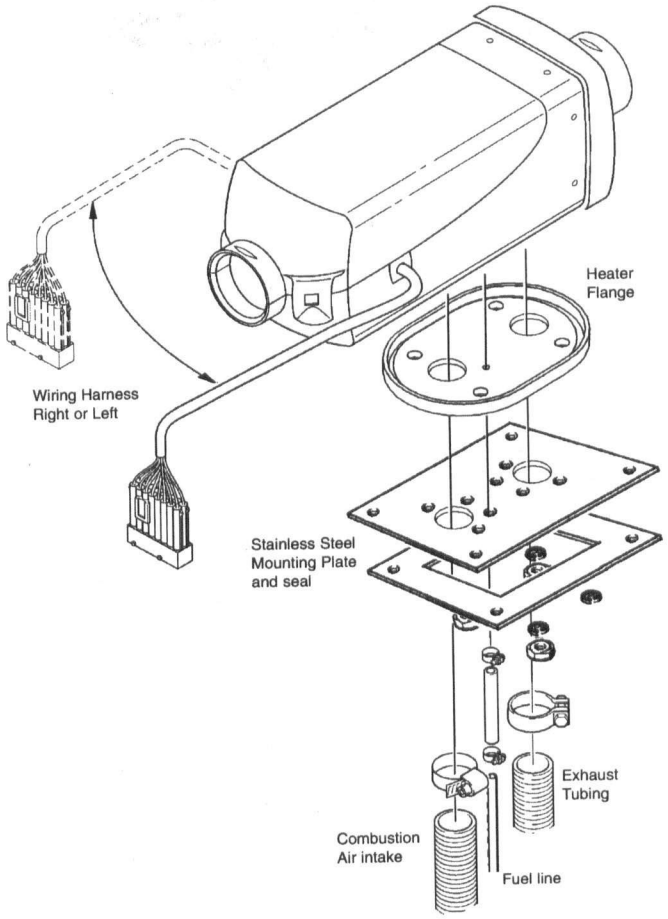

Mounting Pattern

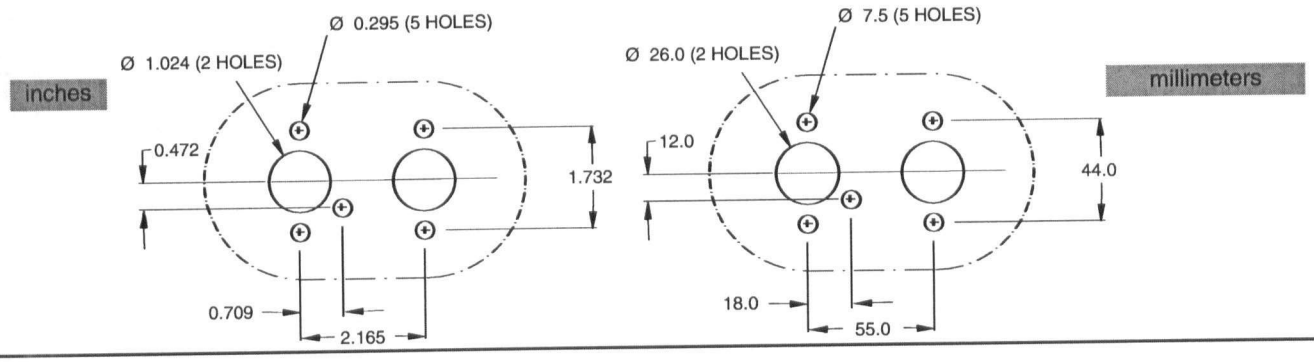

Heater Air Ducting Installation

A 60mm flexible duct 40 inches long, hot air outlet and clamps are provided with the heater kit. In routing and installing the ducting the following criteria must be observed:

- Route ducting with smooth bends. Avoid crushing duct.
- Position hot air outlet so that it cannot be obstructed.
- When not using return ducting. Use a protective air intake grille on air inlet side of heater to prevent objects from being sucked in.
- Ensure provisions are made for proper air return ventilation.
- Use return air ducting for best heating efficiency.

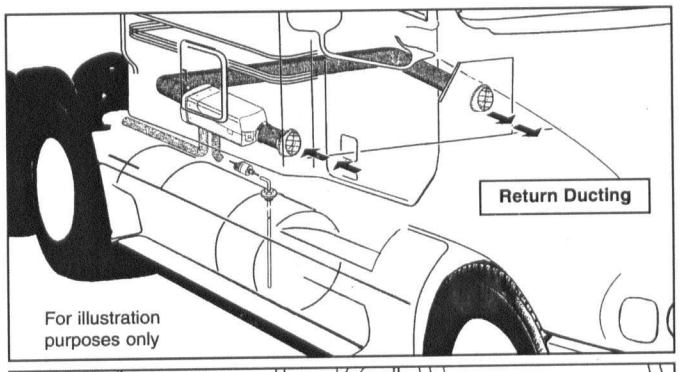

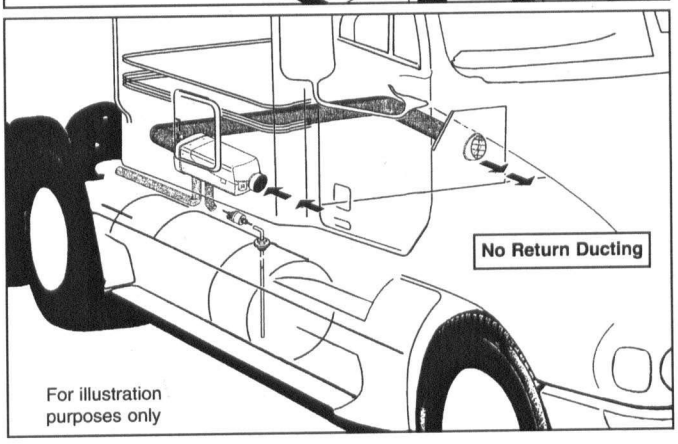

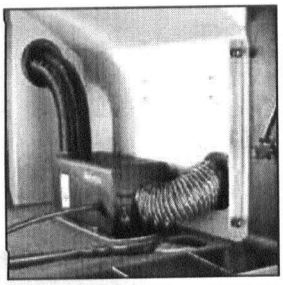

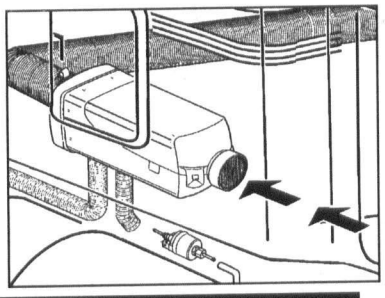

Ducting Components

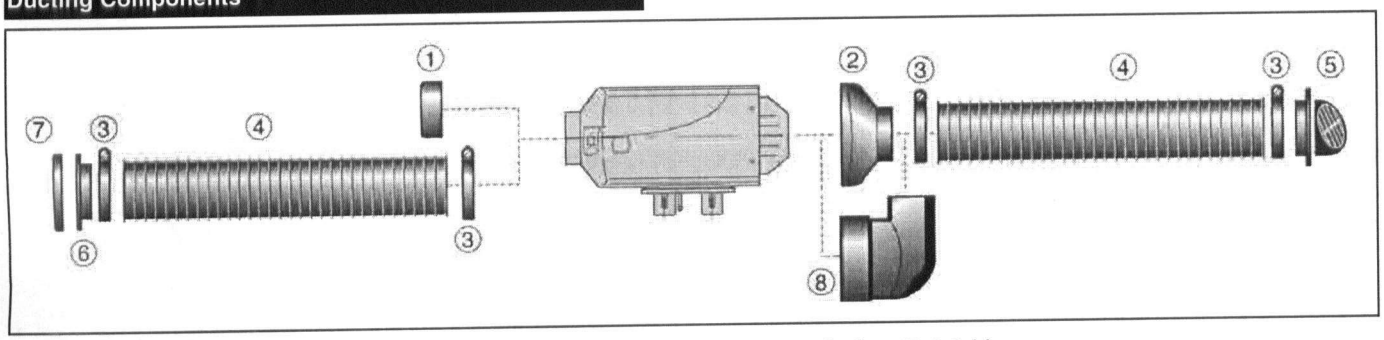

1. Protective Grill
2. Air Outlet Hood *AIRTRONIC* D2 - ø60 or75mm
   AIRTRONIC D4 - ø75 or 90mm
3. Hose Clamp 2-2 3/4"
4. Flex Duct 2 3/8" (ø60 or 75mm) (ø90mm on D4)
5. Air Outlet - Rotatable
6. Connection Piece
7. Protective Grill
8. 90° Bend Ducting 2 3/8"

Warning: Do not use existing vehicle ducting or outlets. Ducts and outlets must be capable of withstanding a minimum of 300°F operating temperatures.

Caution: *Do not over tighten duct clamps.*
Do not position outlet so that it will blow hot air directly at operator or at room thermostat.

Electrical Connections

Main Harness..... 16 pin connector with 10 terminated wires at 8 terminals. (green/red, blue/white (2), red, grey/red, grey, brown, brown/white and yellow (2)). Connect to the heater's 16 pin connector. Connect other harnesses as described below.

***includes**

Power Harness..... 2 core harness (red and brown). Route power harness to batteries, cut to length and terminate as described below. Install 20 amp fuse last (10 amp on 24V). Connect red wire to fuse holder near battery. Connect fuse link wire directly to battery positive post using ring terminal. Connect brown wire directly to battery negative post using ring terminal.

Switch Harness..... 7 core harness (red, brown/white, yellow, grey, brown, grey/red and blue/white). Route this harness the length required to reach thermostat installed in bunk compartment. Do not cut this harness, wires have been soldered at ends for convenience of terminating to terminals on thermostat. Coil up excess harness and secure in safe location.
Connect to thermostat or rheostat switch (refer to switch connection section).

Fuel Metering Pump Harness..... 2 core harness (green/red and brown).
Route this harness from heater to fuel metering pump. Cut to length and connect to fuel metering pump using single terminals and connector provided with kit.

Note: No polarity required.

Diagnostic Harness..... 8 pin connector (red, brown, yellow, blue/white). For diagnostic purposes only.

Caution: *Install power 20 amp fuse only after all electrical connections are complete. 10 amp on 24V.*

Note: All exposed electrical connections should be coated with protective grease, (petroleum gel, Vaseline, etc.).

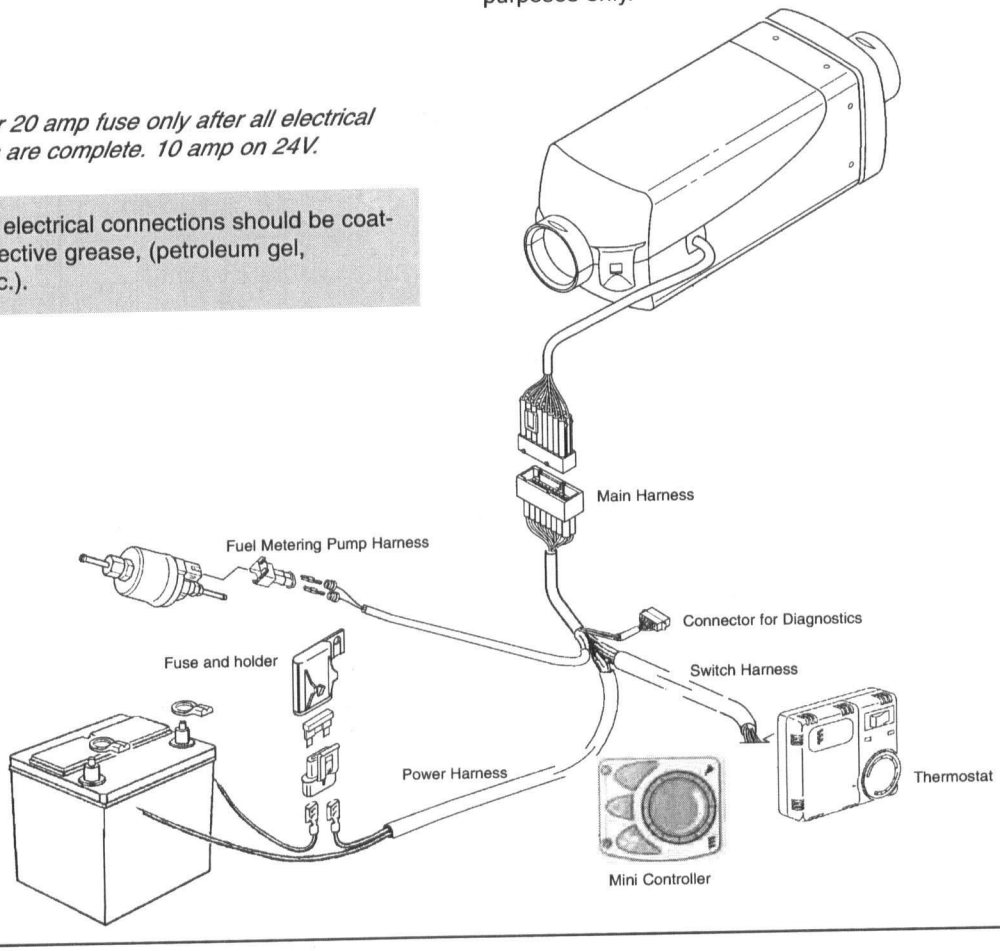

Exhaust and Combustion Air Intake Connections

A 24mm flexible stainless steel exhaust pipe (51"long) and a 25mm flexible plastic tube (39" long) for combustion air intake are included with the heater kit. Exhaust clamps and holders are also provided.

Caution: Route exhaust and combustion air intakes so they cannot be plugged by dirt, water or snow.Ensure the outlets do not face into the vehicle slip stream. Keep exhaust and combustion air intake a minimum of 12" apart. Drill 1/8" holes in exhaust pipe if necessary to allow water drainage. Combustion air intake and exhaust lengths can be shortened to a minimum of 8".

- Attach the exhaust pipe to the exhaust outlet of the heat exchanger.
- Route exhaust pipe to an open area to the rear or side of the vehicle so that fumes cannot build up and enter the cab or the combustion air inlet to the heater.
- Install protective cap.
- Attach the combustion air intake tube to the combustion air inlet of the heater.
- Once secure to the heater inlet, the intake pipe must be routed to the underside of the vehicle where it will pick up clean, fresh, moisture free air.

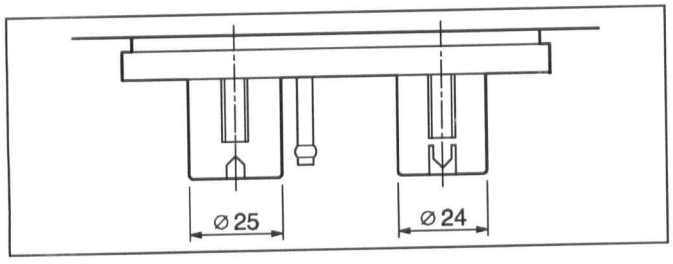

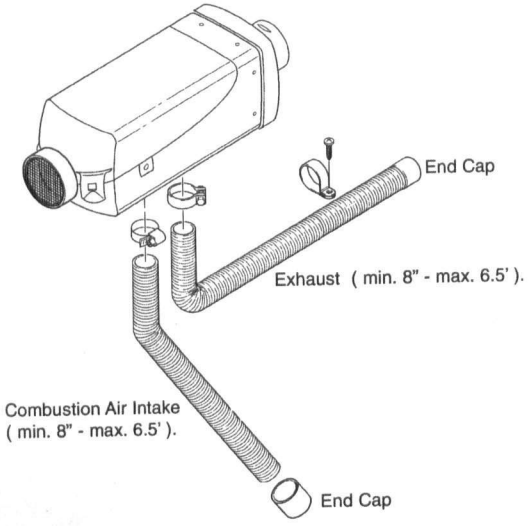

Warning: The exhaust is hot, keep a minimum of 2" clearance from any heat sensitive material

Warning: Route exhaust so that the exhaust fumes cannot enter the passenger compartment.

Operating Switches

The heater can be controlled using a Mini Controller, Thermostat or Rheostat type switch. It can also be controlled by a 7 day timer with thermostat. See schematic pg. 19.

Mini Controller

- Stick the drilling template to the required place of installation. **Note:** The drilling template (removable and self-adhesive) is attached to the front. Do not press the control field during installation.
- Drill 2.5 and 7.5 mm holes.
- Remove the control knob from the mini controller.
- Fit the mini controller with the elastic base.
- Screw in fixing screw up to the end stop.
- Put the control knob on the mini controller. The arresting device in the control knob must be inserted in the keyway in the mini controller.
- Connect the mini controller in accordance with the circuit diagram.

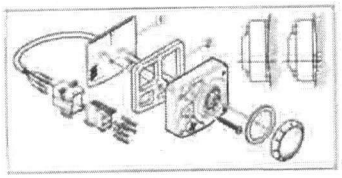

① Drilling template
② Elastic base for uneven installation area

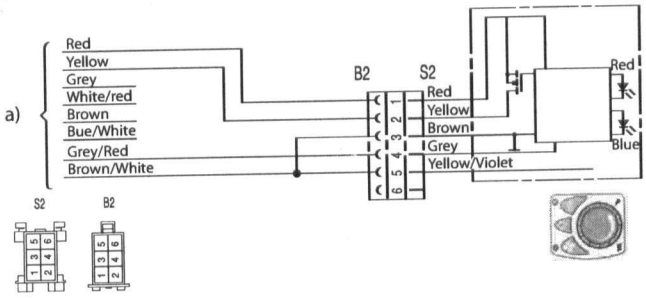

a) Connection of control elements on the heater:

red	battery plus
yellow	switch on signal S+
grey	optional external sensor
brown	battery minus
blue / white	diagnostics
grey / red	set temperature value
brown / white	sensor reference ground

Insulate any cable ends not used.
The connectors and socket housing are shown from the cable entry side.

Thermostat

- Select a mounting location which will be representative of the average temperature of the area being heated. Avoid mounting near heater outlets, windows, doors, electrical appliances or in areas receiving direct sunlight.
- Route the switch harness from the heater to the thermostat mounting location.
- Mount the thermostat as shown using proper mounting hardware and the slots provided on the thermostat base. Pull the switch harness through the thermostat base access hole.
- Connect the six core switch harness to the thermostat as shown.

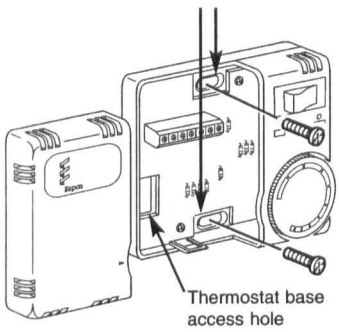

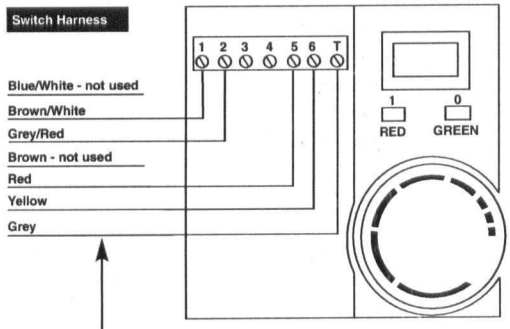

This wire is "optional"

Grey wire notes:

- It is recommended that when using return ducting, not to use this wire. See illustration on pg. 9 for ducting.
- Not using the grey wire defaults the heater to use the temperature sensor on the control unit of the heater.
- Use of the grey wire defaults the heater to use the sensor on the thermostat.
- The sensor on the control unit provides a more accurate reading of the overall air temperature, whereas the sensor in the thermostat gives more of a spot reading of the air surrounding the thermostat.

Temperature sensor on ***AIRTRONIC*** control unit.

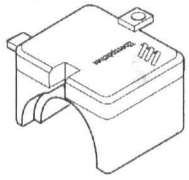

Note: When using Rheostat switch, the **Return Ducting** method must be used as shown on page 9. This allows the ***AIRTRONIC*** heater's internal sensor to properly monitor cab temperature.

- Mount the rheostat switch in a location where it is easily accessible.
- Route the switch harness from the heater to the Rheostat mounting location.
- Connect the six core switch harness as shown.

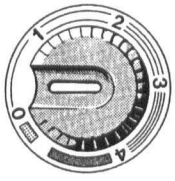

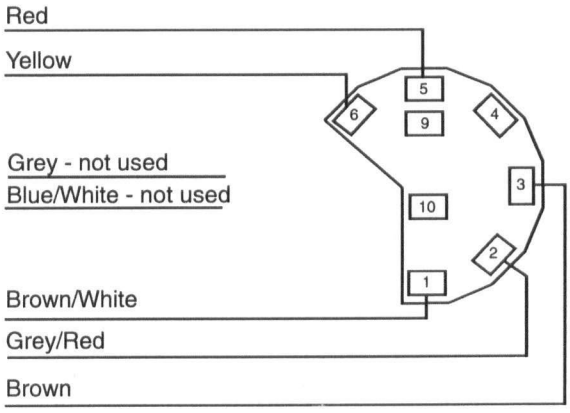

Heater Operation

⚠ Warning: To prevent fire, the heater must be switched off while filling fuel tanks.
To prevent asphyxiation, the heater must not be operated in enclosed areas unless heat exhaust is routed to the outside.

1 Switch On

- Switch the heater on using the mini controller's heat button or the room thermostat's, On/Off switch (1=On, 0=Off) or the rheostat switch.

2 Start Up

On start up the indicator light illuminates and the following sequences take place:

- Control unit does a systems check of the glow pin, flame sensor/temperature sensor, fuel metering pump and control unit.
- Glow pin is energized and starts preheating the combustion chamber.
- Blower starts slowly and begins to accelerate.
- After a delay (approx. 20 seconds) the fuel pump delivers fuel.
- Ignition will take place as the fuel/air mixture begins to burn.
- Blower speed and fuel delivery are slowly increased.
- Once flame sensor has detected a flame the glow pin will switch off, after approx. 15 secs.
- After another 120 secs., heater will have reached maximum power.

3 Temperature Setting for Mini Controller

The mini controller enables you to set the heater installed in the vehicle to the temperature you require.

You can control the desired temperature range by turning the dial clockwise to increase temperature.

- Lowest Setting - approx. 47°F (8.5°C)
- Highest Setting - approx. 97°F (36°C)

Use the "Heater" button to start the heater in heating mode (continuous operation). You can adjust the required temperature with the temperature control knob. If the heater is in heating mode, the red LED lights up as a check.

Use the "Fan" button to start the heater in fan mode (continuous operation). This feature circulates the air through out the cabin area. The temperature control knob has no function in fan mode. If the heater is in fan mode, the blue LED lights up as a check.

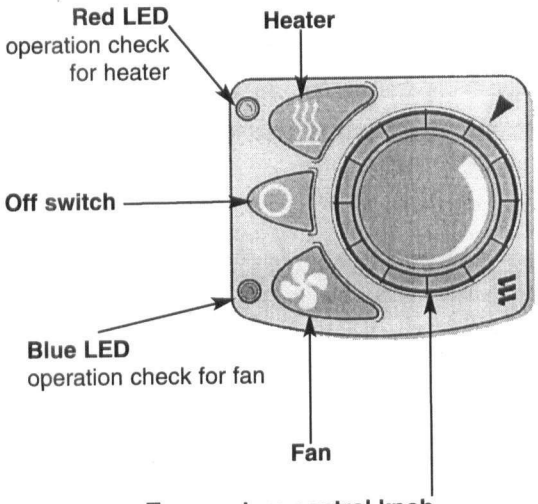

Temperature control knob

- Counter-clockwise end stop
  approx. 47°F (8.5°C) - small amount of heat
- Clockwise end stop
  approx. 97°F (36°C) - large amount of heat

4 Temperature Setting for Thermostat and Rheostat

Using the adjusting dial, set the desired temperature range.

- Lowest Setting - approx. 10°C (50°F)
- Mid - Setting - approx. 20°C (68°F)
- Highest Setting - approx. 30°C (86°F)

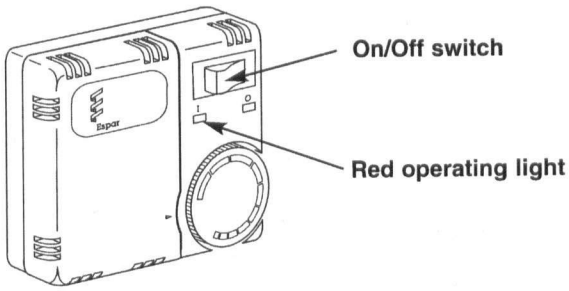

On OEM installs the "red" & "green" indicator lights illuminate.
On aftermarket installs only the "red" light illuminates.

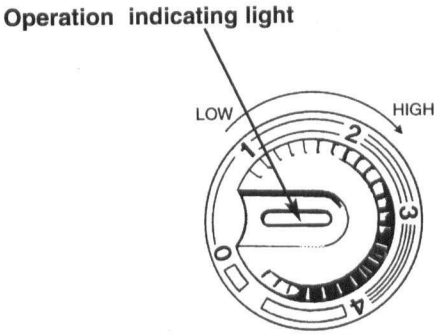

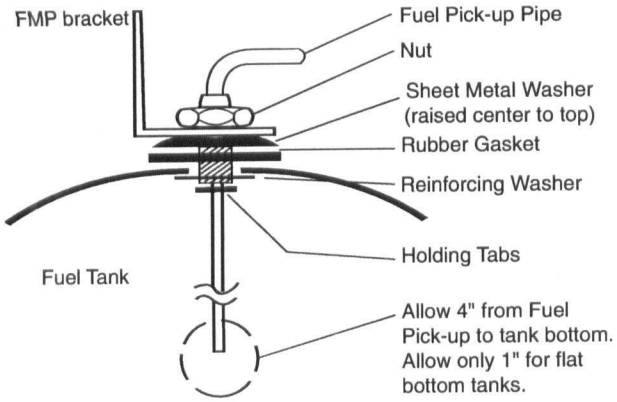

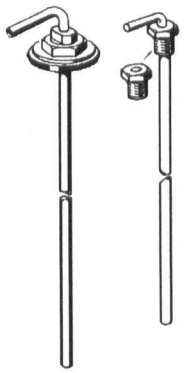

NPT fitting and pipe
optional

Custom Pick-Up Pipe with NPT fitting - optional

- Remove an existing plug from the top of the fuel tank.
- Cut the fuel pick-up pipe to length.
- Secure the fuel pick-up pipe into position using the combined NPT compression fitting.

Note: Will not be able to use FMP bracket.

Note: NPT fittings are available in various sizes (Refer to parts section).

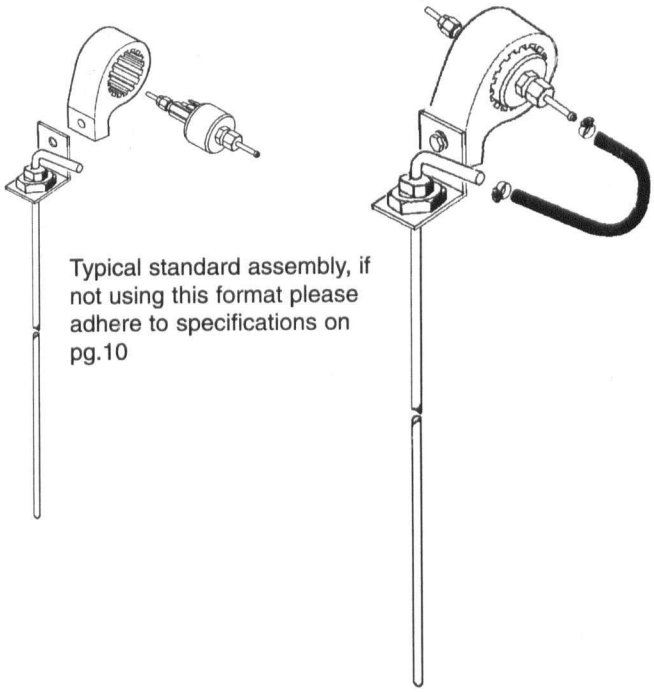

Typical standard assembly, if not using this format please adhere to specifications on pg.10

Fuel Metering Pump

- Choose a protected mounting location close to the fuel pick-up pipe and heater if not using standard assembly as shown on right.
- Using the bracket and rubber mount provided, install fuel pump as shown.

Note: Proper mounting angle of the fuel pump is necessary to allow any air or vapor in the fuel lines to pass through the pump rather than cause a blockage.

Fuel Line

- Route fuel lines from the fuel pick-up pipe to the fuel metering pump then to the heater.
- Use fuel lines provided.
- Other sizes or types of fuel lines may inhibit proper fuel flow.
- Make proper butt joints using clamps and connector pieces as shown on previous page.
- Use a sharp utility knife to cut plastic fuel lines to avoid burrs and pinching fuel line shut.

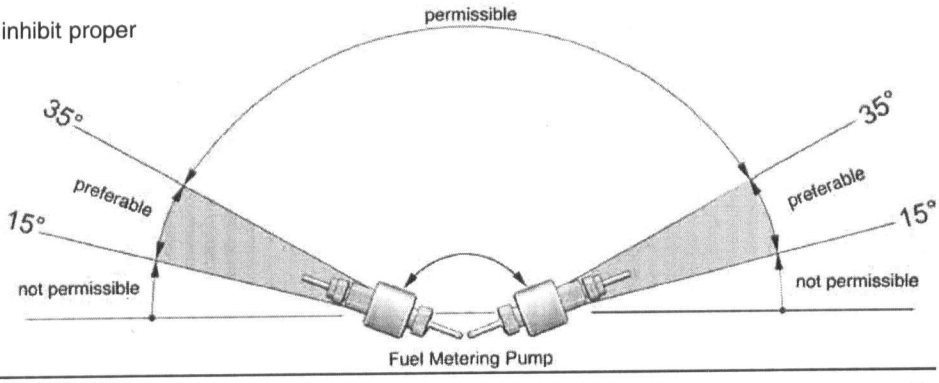

Fuel System

The fuel metering pump is the heart of the system and must be installed properly to ensure a successful heater operation.

Fuel System Overview

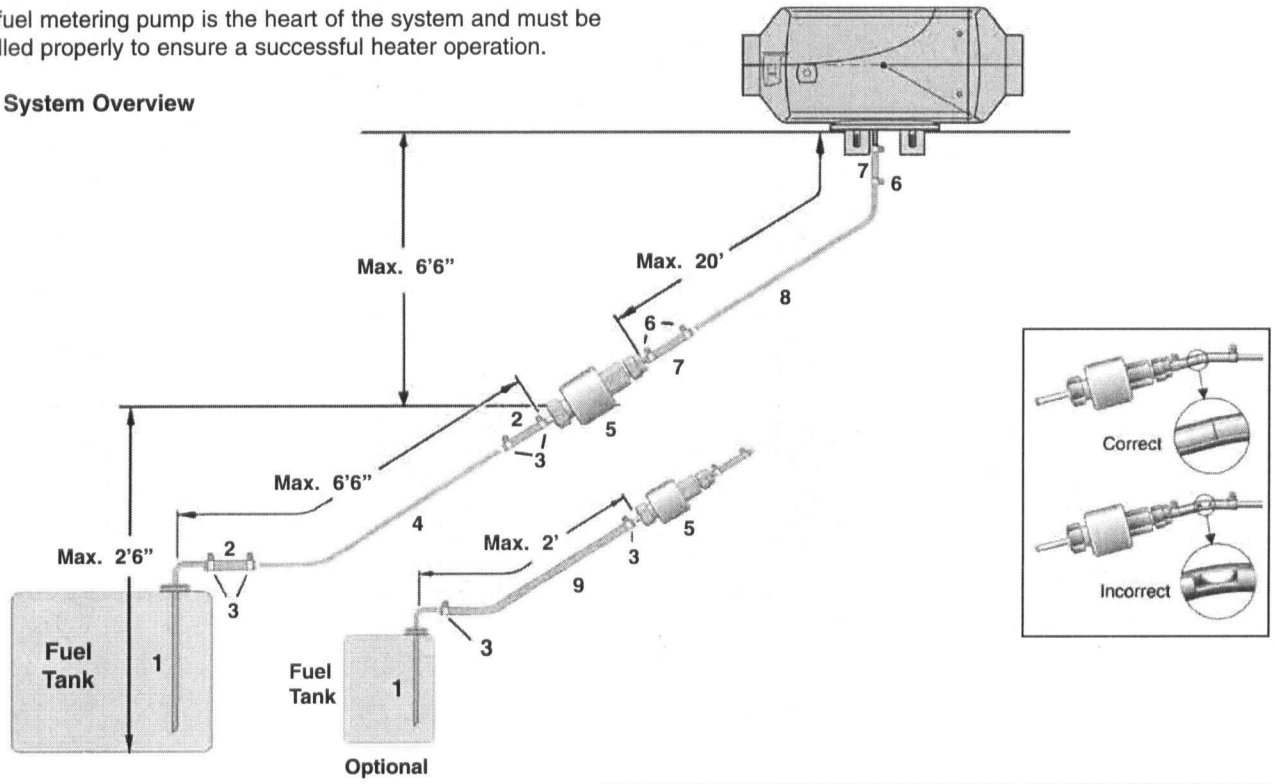

Note: Butt joints and clamps on all connections.

1. Fuel Pick-Up Pipe
2. 5.0 Rubber Connector
3. 11mm Clamp
4. 2.0mm Black Plastic Fuel Line
5. Fuel Metering Pump
6. 9mm Clamp
7. 3.5mm Rubber Connector
8. 1.5mm White Plastic Fuel Line
9. 5mm Rubber Fuel Line

Fuel Pick-Up Pipe Installation (Standard Pick-Up)

- Choose a protected mounting location close to the fuel pump and heater. A spare fuel sender gauge plate provides an ideal mounting location.
- Drill the mounting holes as shown
- Cut the fuel pick-up pipe to length.
- Mount the fuel pick-up pipe as shown.
- Lower the fuel pick-up pipe (with reinforcing washer) into the tank using the slot created by the two 1/4" holes.
- Lift the assembly into position through the 1" hole.
- Assemble the rubber washer, fuel metering pump bracket, metal cup washer and nut.

Note: Drill the two 1/4" holes first.

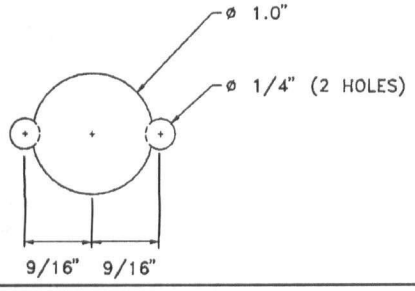

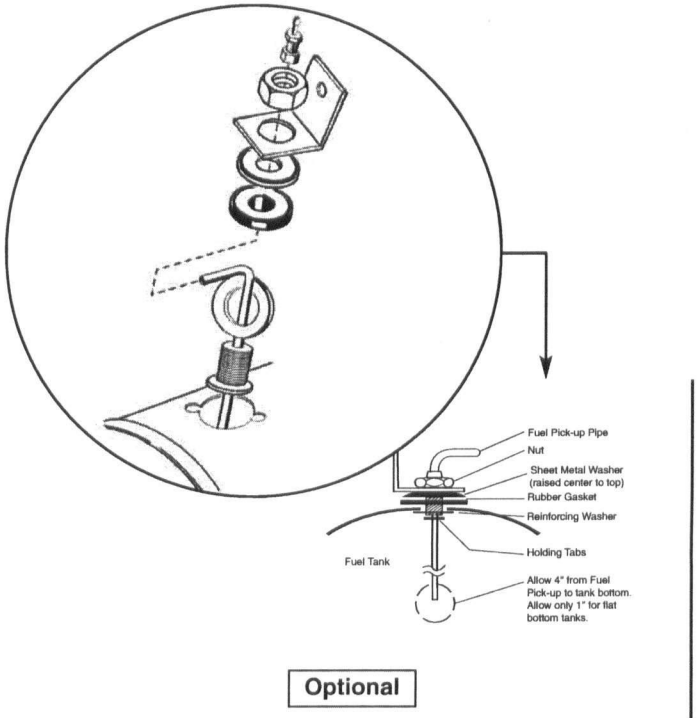

5 Temperature Control

- The temperature is monitored constantly at the heater's process air inlet or external sensor.
- This temperature is compared to the set temperature on the adjusting dial (Mini controller/Thermostat).
- The heater cycles through Boost, High, Medium and Low heat modes to maintain the desired temperature.
- If the desired temperature is exceeded while the heater is operating in low heat mode the heater will switch into "standby" mode. This is a comfort feature.
- The heater will re-start once heat is required again.

6 Switch Off

Once switched off manually, the heater begins a controlled cool down cycle.

- Indicating light(s) on switch will go off.
- Fuel pump stops delivering fuel.
- The glow pin is re-energized for a 40 second after-glow to burn off any combustion residue.
- The blower continues to run for 4 minutes and automatically switches off.

7 Controls and Safety Equipment

- If the heater fails to ignite within two 90 second start attempts, a "no start" shut down occurs.
- If a flame out occurs after the heater has started, the heater will attempt one restart.
- If repeated flame outs occur within 10 minutes the heater will not restart.
- Overheat shut down will occur if there is a restriction of the heating air flow (i.e. blocked inlet or outlet). The overheat sensor will automatically reset once the heater has cooled down.
- Once the air flow restriction is removed, the heater can be re-started by switching the heater off then back on.
- If the voltage drops below 10.5 volts or rises above 16 volts the heater will shut down (21 volts and 28 volts for 24 volt systems).
- If the glow pin circuit or fuel metering pump circuit are interrupted the heater will not start.
- The blower motor is checked continuously during operation. Shut down will occur if the blower does not start or maintain proper speed.

Operational Flow Chart

	STARTING PHASE					RUNNING PHASE		SHUT DOWN PHASE		
Operating Mode	System Check	Pre-heat	Ignition Attempt	Pre-heat 2nd. attempt	Ignition Attempt 2nd. attempt	Boost	Controlled Heating	After Glow	Cool Down	Stand by
Blower	Off	**On**	**On**	**On**	**On**	**On**	**On**	**On**	**On**	**On**
Glow Pin	Off	**On**	**On**	**On**	**On**	Off	Off	**On**	Off	Off
Fuel Pump	Off	Off	**On**	Off	**On**	**On**	**On**	Off	Off	Off
TIME 00:00	1- 3 sec.	60 sec.	Up to 90 sec.	60 sec. (If Required)	Up to 90 sec. (If Required)	Time dependent on heat exchanger temperature	Continual Operation until switched off by operator or temperature control	40 sec.	4 min.	

Note: During controlled heating cycle, if desired heat level is exceeded the heater will switch into standby mode. Heater will automatically restart once heat is again required

Function diagram *AIRTRONIC* D2

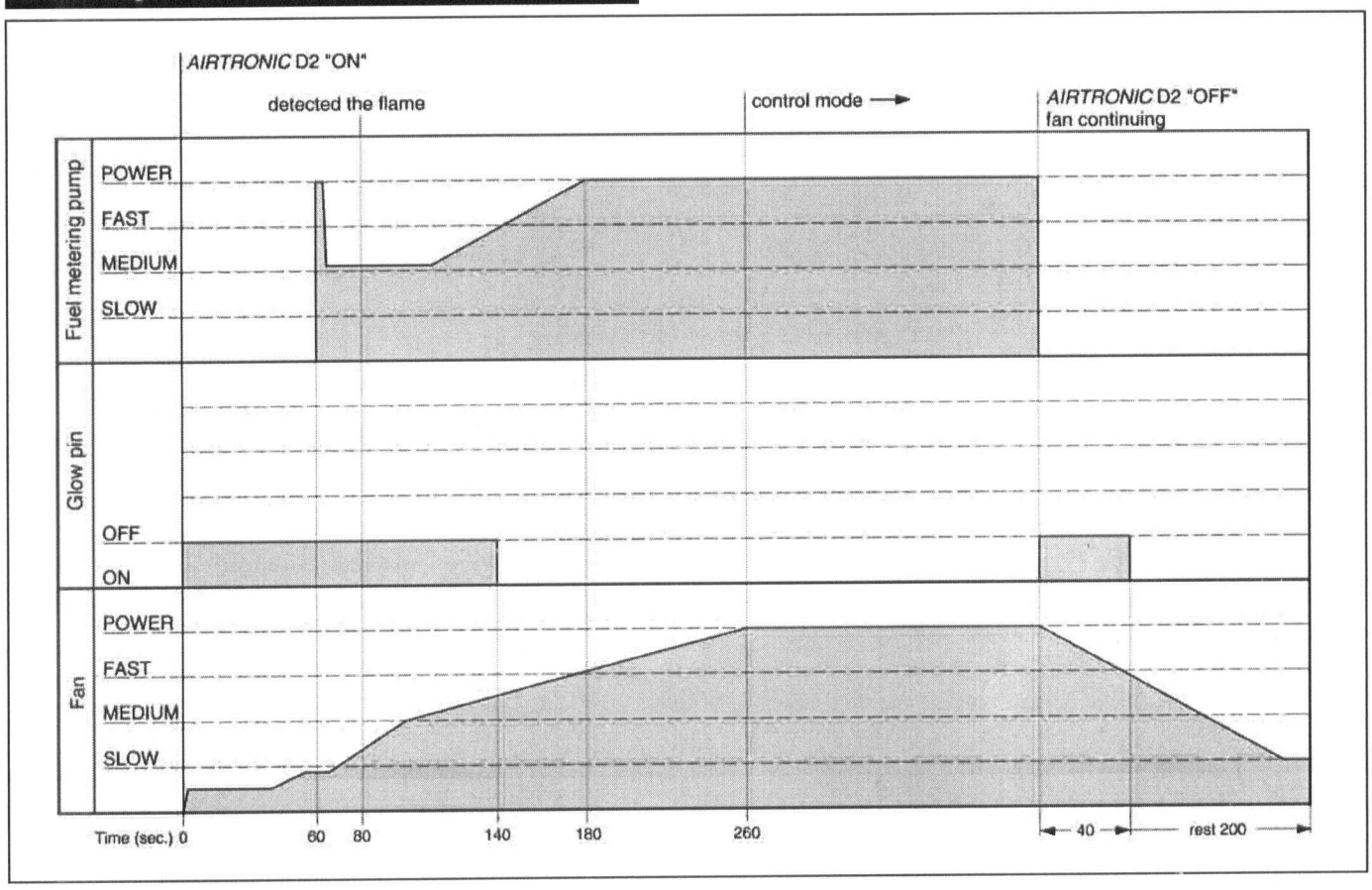

Function diagram *AIRTRONIC* D4

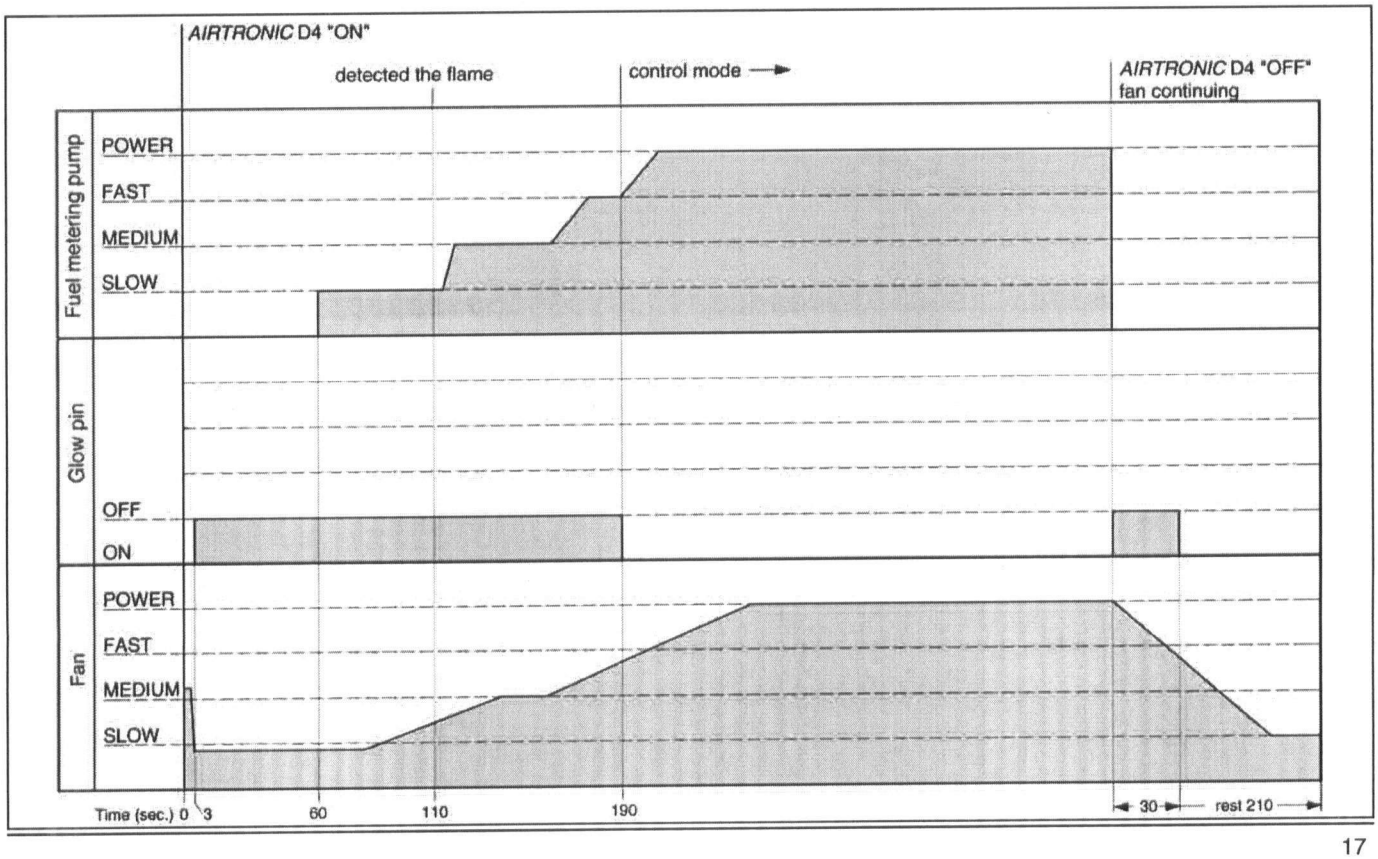

Schematic *AIRTRONIC* D2 / *AIRTRONIC* D4

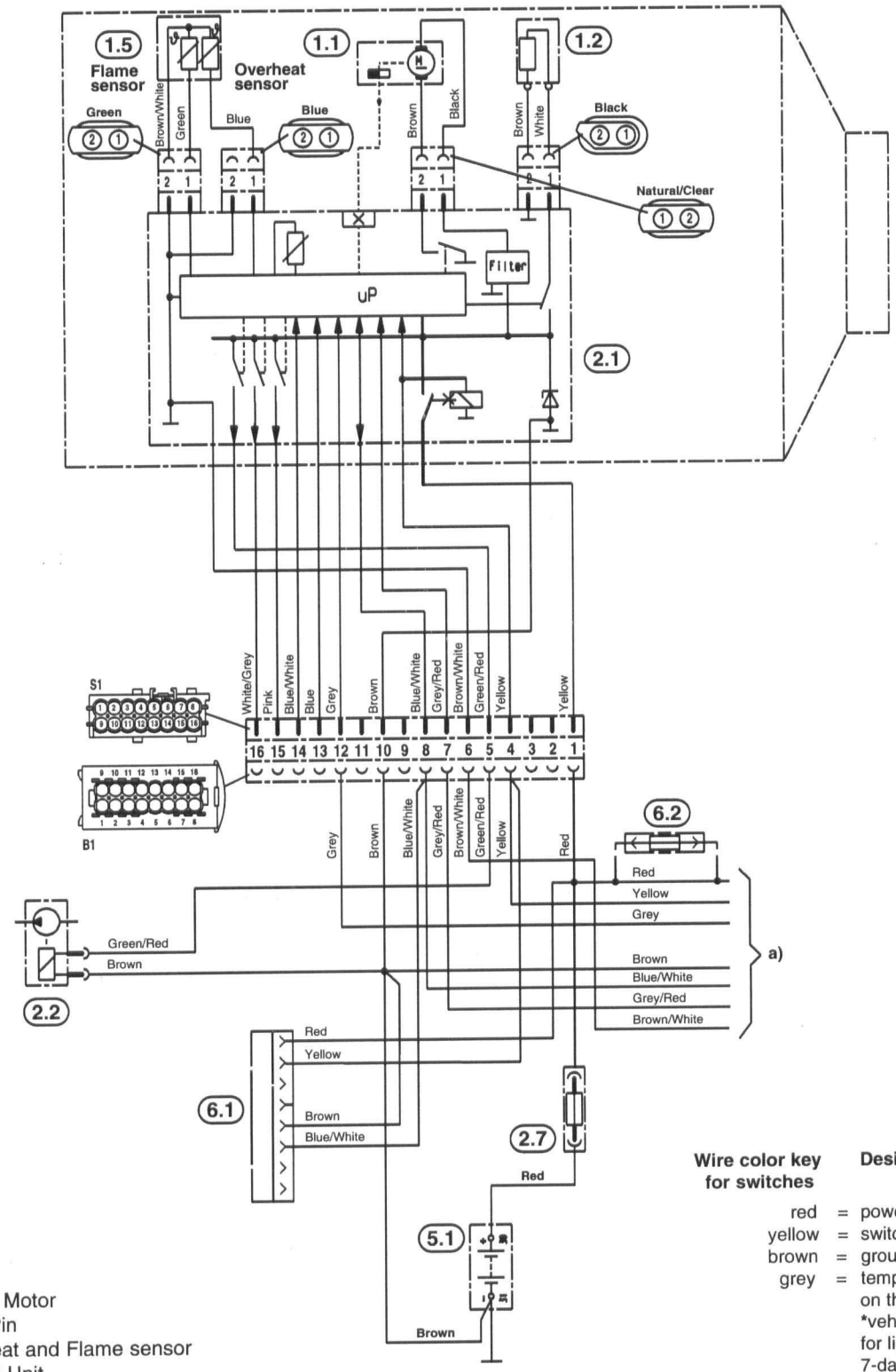

Wire color key for switches		Designation
red	=	power (+)
yellow	=	switch
brown	=	ground (-)
grey	=	temperature sensor on thermostat *vehicle dimmer switch for light display on 7-day timer
grey/red	=	temperature setting
blue	=	diagnostic from heater
blue/white	=	diagnostic from heater
brown/white	=	ground
black	=	to vehicle ignition accessories for continuous operation of heater on 7 day timer

1.1 Blower Motor
1.2 Glow Pin
1.5 Overheat and Flame sensor
2.1 Control Unit
2.2 Fuel Metering Pump
2.7 Main Fuse 12Volt - 20 amp / 24 volt - 10 amp
3.1.17 Mini Controller
3.1.11 Rheostat
3.2.8 7 Day Timer
3.5 Thermostat
5.1 Battery
6.1 Diagnostic Pigtail (for connection to Fault code retrieval device)
6.2 5 amp switch fuse - on certain models only

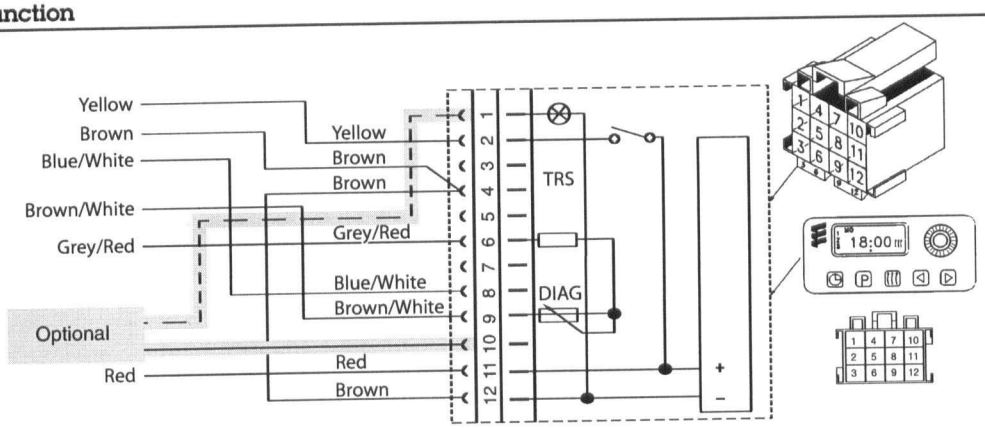

3.2.8

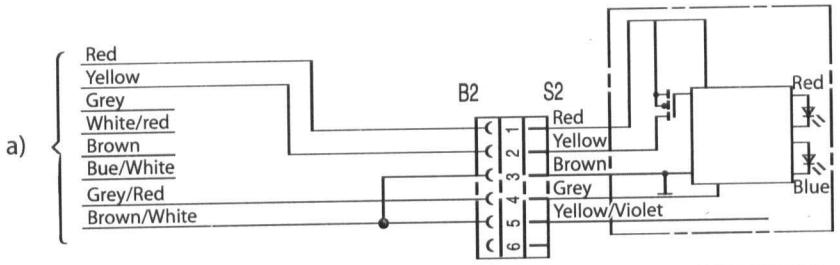

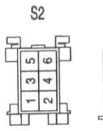

3.1.17

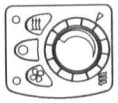

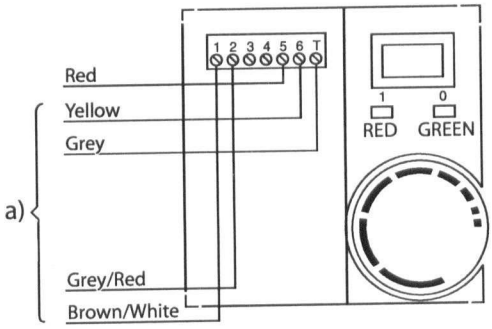

3.5

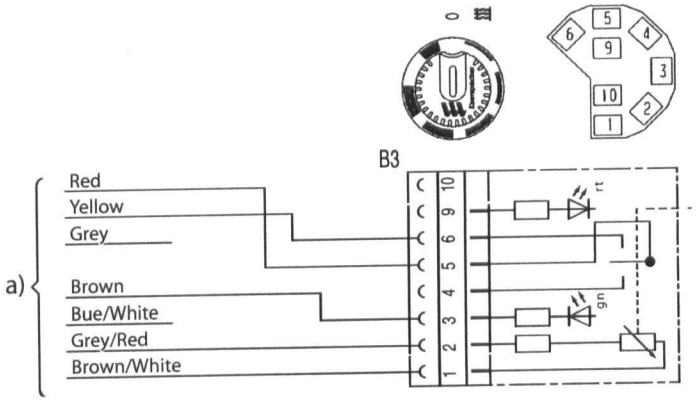

3.1.11

Maintenance

Recommended Periodic Maintenance

- Remove the **glow pin** and inspect for carbon build up. Clean or replace.
- Remove the **glow pin screen** and inspect for carbon build up. Clean or replace.
- Make sure **vent hole** is open. Espar recommends the use of non-detergent 100% volatile carburetor cleaner, an air gun will also help. Remove loose carbon from the glow pin chamber.
- Inspect the **ducting**, the air intake screen and air outlet for restriction or blockage.
- Inspect **combustion air intake and exhaust** for blockage.
- Operate your heater for a minimum of 20 minutes each month.
- **Maintain your batteries** and all electrical connections in good condition. With insufficient power the heater will not start. Low and high voltage cutouts will shut the heater down automatically.
- Use **fuel suitable for the climate** (see engine manufacturers recommendations). Blending used engine oil with diesel fuel is not permitted.

Basic Troubleshooting

Check List:

What happens when the heater is switched on and ....

Heater does not ignite

1 Blower motor does not run

Check:
- Fuse in power harness.
- Power to control unit.
- Power to and from switch.
- Electrical connections.

2 Blower motor runs approximately 20 seconds and then shuts off

Check:
- Ensure voltage at control unit remains above 10 volts during start up with glow pin circuit on.

3 Blower motor runs/fuel metering pump starts and then shuts down after two start up attempts

Check:
- Fuel lines and fuel filter.
- Fuel quantity. Pg. 25
- Combustion air or exhaust tube blockage.

4 Blower motor runs/no fuel metering pump

Check:
- For electrical pulses at fuel metering pump.
- If pump is frozen.
- Blocked fuel line.

Heater ignites

1 Shuts down at random

Check:
- Fuel metering pump quantity. Pg. 26
- Possible overheat.
- Control unit input voltage.

2 Heater smokes and carbons up

Check:
- Exhaust pipe blocked.
- Combustion air intake blocked.
- Exhaust entering combustion air intake pipe.
- Short cycling, rapid on/off operation.
- Fuel system.
- Fuel metering pump quantity.
- Motor rpm.

Self Diagnostics

The heater is equipped with self diagnostic capability. To retrieve information on the heater's last 5 faults, a retrieval device is required (P/N: CA1 05 020). There is a pig tail to accommodate the connector on the main harness from heater. If wire pigtail is not present, a wiring adapter (P/N: 22 1000 31 86 00) must be used.

Connect the fault code retrieval device as shown. This device enables these five functions to be performed.

1. Access the current fault which is affecting the heater.
2. Access the five previous faults which affected the heater.
3. Clear the fault memory to erase previous fault history.
4. Unlock "lockout features" which exist for some control units.
5. Start heater.

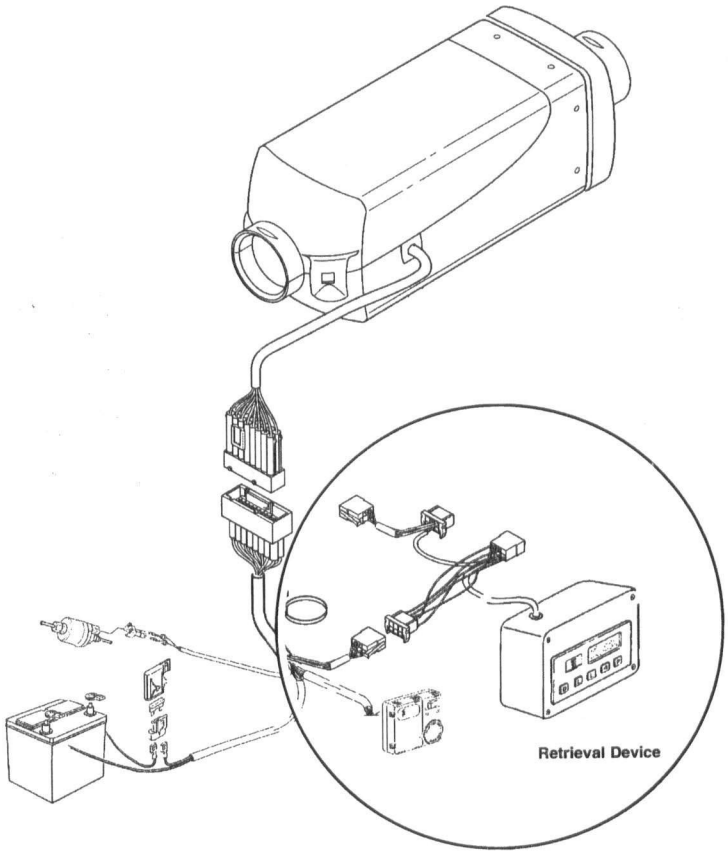

Equipment Face and Controls

Symbols that are seen on the display face are as follows:

AF	Actual fault.
F1-F5	Up to five stored faults can be accessed. The AF and F1 are the same number.
	This sign is displayed when the heater is in operation.
DIAG	The word (DIA) 'gnostic will come on when the unit is connected.
000	Three digit diagnostic fault code number.

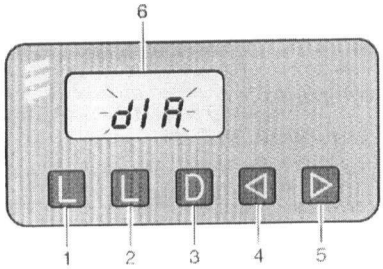

1. delete fault memory
2. delete fault memory
3. switch heater on / off, request diagnostic fault codes
4. backwards, fault F5 - F1, AF
5. forward AF, F1 - F5
6. display

Note: If there are no heater faults, the heater will go through a normal start cycle and regulate based on thermostat setting.

- Switch the fault code retrieval device on and wait 10 seconds.
- Press the "D" button.
- Wait 3-5 seconds for the current fault code to appear (AF).
- To review the previous faults use the arrow buttons (F1= Most Recent, F5= Oldest).
- Consult the fault code chart for code number descriptions.
- To erase the faults that are in memory press both "L" keys at the same time for 5 seconds. This will also unlock the control unit in the case of an operational lockout.

See schematic pg. 19

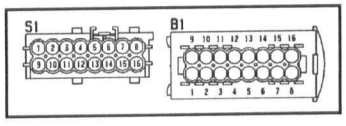

Fault Code		Fault Description Causes / Repair
000	Normal Operation	
004	Warning - short circuit in control unit, fresh air-outlet	Disconnect connection S1/B1 at *AIRTRONIC*. At connector B1, pin 16 check for short between pin and blower relay. If no short exists replace control unit.
005	Warning - short circuit at control unit - anti-theft alarm output	Disconnect connection S1/B1 at *AIRTRONIC*. At connector B1, pin 16 check the line through to the relay isolating switch or theft warning in line for short circuit to chassis. If no short exists replace control unit.
009	TRS - shut down	Switch off due to signal change.Check for change of signal from (+) to (-) at pin 13 (S1) or a (+) signal at pin 14 (S1).
010	Overvoltage	Start vehicle motor. Check voltage at (B1) between terminals 1 and 10. This must be less than 16 volts (15.2 volts with glow pin on). Check vehicle charging system. *AIRTRONIC 24 volt - voltage must be less than 32 volts*
011	Undervoltage shut down	Start vehicle motor. Check voltage at connector (B1) between terminals 1 and 10. This must be more than 10 volts. Check vehicle charging system. Check batteries and connections. *AIRTRONIC 24 volt - voltage must be more than 21 volts.*
012	Overheat at overheating sensor	Sensor has detected excessive temperatures. Check for clogged hot air ducting. Check that the the total number of ducting pieces in unison is not too large. Re-route if necessary. Check overheat sensor resistance values. (see component value chart pg 25). If O.K. Measure fuel quantity. See page 25.
013	Overheat at flame sensor	Flame sensor detects excessive temperature at heat exchanger. Check for clogged hot air ducting. Check that the the total number of ducting pieces in unison is not too large. Re-route if necessary. Measure fuel quantity. See page 25. Check flame sensor resistance. (see component value chart pg 25)
014	Temperature difference between flame sensor and overheat sensor too large	Check for clogged hot air ducting. Check that the the total number of ducting pieces in unison is not too large. Check flame sensor, if O.K., check overheat sensor. If over-heat sensor is defective replace combi-sensor. If over-heat sensor is O.K. measure fuel quantity. See page 25. If fuel quantity is O.K. replace control unit.
015	Overheat with excessive temperatures	Fault code 015 is shown when the *AIRTRONIC* is switched on again after fault code 017. The hardware limit value for the overheat sensor, has been exceeded - control unit is damaged. Check sensor. Replace control unit.
017	Overheat with excessive temperature	The hardware limit value for the overheat sensor, has been exceeded, because the control unit has not detected fault code 012, 013.The control unit is locked. If *AIRTRONIC* is switched on again, fault code 015 is displayed. Replace control unit. Check sensor.
019	Glow Pin Resistance	Power consumed by glow pin is too low (glow pin resistance is too high). Replace the glow pin.
020	Open circuit - glow pin	Check continuity of glow pin. *AIRTRONIC* 12 volt - approx. 0.5 Ω ± 0.05 Ω *AIRTRONIC* 24 volt - approx. 2 Ω ± 0.2 Ω
021	Short circuit - glow pin **Caution!** For ***AIRTRONIC*** 12 volt, check functions with max. 8 volt *For* ***AIRTRONIC*** 24 volt, check functions with max. 18 volt. If voltage values are exceeded the component is destroyed. **Check short-circuit resistance of mains unit: min. 20 Amp.**	Check functions of glow pin in installed condition, to do so disconnect connector from controller. *AIRTRONIC* 12 Volt and 24 Volt. Apply voltage of 8 / 18 volts to glow pin respectively, and measure current intensity after 40 seconds. Glow pin is O.K. for the following values: glow pin 8 volt - current = 9 amps + 1.5 / - 1.2 amps glow pin 18 volt - current = 4 amps ± 0.5 amps If the values differ, replace glow pin. If the values of the continuity test and function test are O.K., check glow pin cable harness for damage and continuity. If O.K., replace control unit.

Fault Code		Fault Description Causes / Repair
031	Blower motor interrupted	Check blower motor cable harness for correct routing and damage. If O.K., disconnect cable harness from control unit and check for continuity, if O.K., replace control unit.
032	Blower motor, short circuit **Caution!** For ***AIRTRONIC*** 12 volt, check functions with max. 8 volt *For* ***AIRTRONIC*** 24 volt, check functions with max. 18 volt. If voltage values are exceeded the component is destroyed. **Check short-circuit resistance of mains unit: min. 20 Amp.**	Check functions of blower motor, to do so, disconnect connector from control unit. Apply voltage of 8 volts or 18 volts ± 0.1 to blower motor and measure current intensity after 40 seconds. Current < 6.5 amp - blower motor O.K., replace controller Current > 6.5 amp, replace blower.
033	Blower motor does not turn	Motor speed varies from specification by more than 10% for longer than 30 seconds. If too slow, check for restriction, and check for short in motor circuit or control unit. If none found, replace blower. If too fast, check for damage or missing magnetic sensor on control unit. Replace blower motor if damaged. Replace control unit otherwise.
047	Short circuit - fuel metering pump	Disconnect connector from fuel metering pump, if fault code 048 (interruption) is displayed then the fuel metering pump is defective, replace FMP. If fault code 047 is still displayed, then disconnect connection S1/B1. At connector B1, Pin 5, check line1(green/red) through to FMP for short circuit to pin 10, if O.K. replace control unit.
048	Open circuit - fuel metering pump	Disconnect connector from fuel pump and measure resistance value of fuel pump (see values, pg 26). If resistance values O.K., then reconnect cable harness to the fuel pump. Disconnect connection S1/B1, and measure the resistance value between pin 5 and pin 10. If O.K., replace control unit.
050	Too many no start attempts	Control unit is locked after too many unsuccessful start attempts. Check fuel, glow pin, combustion air and exhaust flow. Use control unit tester or fault code retrieval device to unlock control unit. Maximum 255
051	Faulty flame recognition	If the resistance value of flame sensor is 1274 Ω after switching on (> 70°C), then the blower of the *AIRTRONIC* runs for approx. 15 minutes to cool down. If resistance does not fall below the above value within 15 mins., this is followed by fault shut down. Check flame sensor, diagrams and values, pg 25. If O.K., replace control unit.
052	No start safety time exceeded	No flame detected on start attempt. Check exhaust and combustion air lines. Check fuel supply/measure fuel quantity, see following pages. Check glow pin (see fault code 020 and 021). Check flame sensor, diagram and values table on following pages, if O.K., replace control unit.
053 054 055 056	Flame cutout in boost mode Flame cutout in high mode Flame cutout in medium mode Flame cutout in low mode	Heater has started successfully the flame has extinguished. Check exhaust and combustion air lines. Check fuel supply/measure fuel quantity, see values, pg 25. Check flame sensor, diagram and values table on following pages, if O.K., replace control unit.
060	Open circuit - external temperature	Temperature sensor detects a value beyond it's range sensor Disconnect connection S1/B1 (main harness), measure resistance value at connector B1, pins 6 & 12. Refer to the values table on pg 25. If there is an open circuit, the ohmic value between the pins is > 7175 Ω. If the resistance value is O.K., then the control unit is defective. Replace control unit.
061	Short circuit - external temperature	Disconnect connection S1/B1 (main harness), measure resistance value at connector B1, between pins 6 & 12., see values on pg 25. If there is a short circuit, the ohmic value between the pins is < 486 Ω. If fault 061 continues to be displayed, then the control unit is defective. Replace control unit.

Fault Code		Fault Description Causes / Repair
062	Thermostat/Rheostat/Timer, open circuit	Potentiometer values outside of range on Thermostat (switch) Check resistance between pins 6 and 7 at B1. Resistance value for interruption between pins > 7175 Ω Normal value: 1740 Ω - 2180 Ω (± 80 Ω) If resistance value is O.K., replace control unit. If not replace thermostat switch.
063	Switch control - short circuit Fault recognition only works in heating mode. However, if a short circuit already exists and the *AIRTRONIC* is subsequently switched on, ventilating mode will be active (no fault code).	If a ventilating switch has been built in, disconnect and check function. If faulty, replace switch. Disconnect wires from thermostat or switch. If fault code 062 is displayed, replace switch. If switch is O.K., check connection lines grey/red and brown/white for short-circuit. If O.K., reconnect wires to thermostat/switch. Disconnect connection B1. If fault 063 is still displayed, replace control unit. Resistance value for short circuit between pins 6 and 7 < 486 Ω. Normal value: 1740 Ω - 2180 Ω (± 80 Ω).
064	Open circuit - flame sensor	Sensor is sensing value outside of range. Open *Airtronic* shell and remove control unit from casing. Disconnect green connector from control unit. At green connector measure resistance value at green wire and brown/white wire. Check flame sensor, diagram and values on pg. 25. If flame sensor is O.K., replace control unit. Resistance value for interruption > 7175 Ω
065	Short circuit - flame sensor	Open *Airtronic* shell and remove control unit from casing. Disconnect green connector from control unit. If fault 064 is displayed, replace combination sensor (flame/temperature). If fault 065 is still displayed, replace control unit. Resistance value for short circuit < 486 Ω, see values on following pages.
071	Open circuit - overheat sensor	Open *Airtronic* shell and remove control unit from casing. Disconnect blue and green connectors from control unit. Measure the resistance value at blue connector(pin 1- blue wire) and at green connector pin 2 (brown/white wire). See values on following pages. If O.K., replace control unit. Resistance value for interruption > 223 Ω.
072	Short circuit - overheat sensor	Open *Airtronic* shell and remove control unit from casing. Disconnect blue connector from control unit. If fault 071 displayed, replace combination sensor (flame/temperature). If fault 072 is still displayed, replace control unit. Resistance value for short circuit < 183 Ω, see following pages for values.
090	Control unit defect	Internal failure. Replace control unit.
091	External voltage disturbance	Check vehicle charging system. Poor battery, battery charger, eliminate fault.
092	Control unit defective (ROM fault)	Internal failure. Replace control unit.
094	Control unit defective (EEPROM fault)	Replace control unit.
096	Internal temperature sensor defect	Replace control unit or use external temperature sensor.
097	Control unit defective (power failure)	Internal failure. Replace control unit.

Fuel Quantity Test

The fuel quantity should be tested if the heater has difficulty starting or maintaining a flame. Check the following before measuring fuel quantity.

- Check the filter in the fuel pump.
- Check that the fuel lines are correctly routed.
- Check that the fuel lines don't leak.
- Check and tighten hose connections.
- Does fuel withdrawal comply with the data in the technical description.

Preparation

- Detach the fuel line from the *AIRTRONIC*.
- Insert the fuel line into a measuring glass (10 cm^3) graduated cylinder 10ml.
- Switch the *AIRTRONIC* on and allow fuel system to bleed out air for approx. 60 seconds.
- Switch the *AIRTRONIC* off and drain the measuring glass.

Measurement

- Switch the *AIRTRONIC* on.
- The fuel is pumped approx. 30 seconds after switching on.
- Hold the fuel line in the measuring glass level with the glow pin while fuel is being delivered.
- The pump will stop automatically after delivering fuel for 90 seconds (110 seconds for *AIRTRONIC* 4).
- Once fuel pump stops, switch off the heater.

Evaluation

- Read out the quantity of fuel in measuring glass.
- Fuel quantity should be between:

  3.7 ml and 4.3 ml. on *AIRTRONIC* 2

  5.4 ml and 6.3 ml. on *AIRTRONIC* 4
- If the fuel quantity is outside this range, check for and remove any restriction in fuel system or replace the fuel metering pump.

Note: The fuel quantity is not affected by voltage variances.

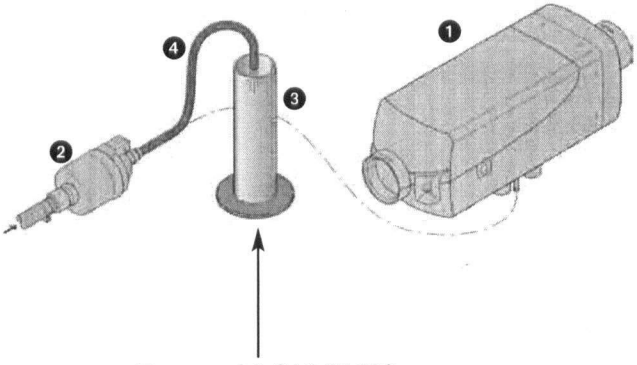

Espar part # CA0 05 006
Graduated Cylinder 10ml

Values for Overheat sensor

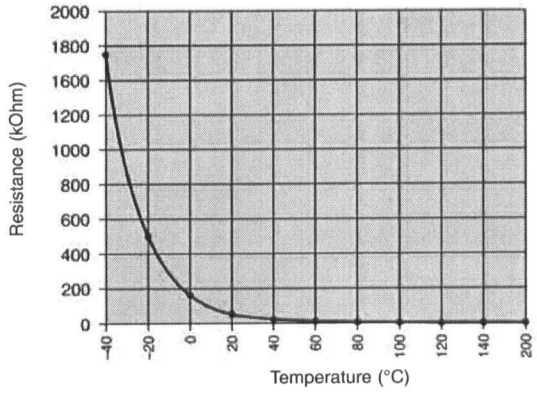

Temperature °C (F°)	Resistance kΩ	min.	max.
-40 (-40)		1597.0	1913.0
-20 (-4)		458.80	533.40
0 (32)		154.70	175.50
20 (68)		59.30	65.84
40 (104)		25.02	28.04
60 (140)		11.56	13.16
80 (176)		5.782	6.678
100 (212)		3.095	3.623
120 (248)		1.757	2.081
140 (284)		1.050	1.256
160 (320)		0.6654	0.792
180 (356)		0.4253	0.5187
200 (392)		0.2857	0.3513

Values for Flame sensor

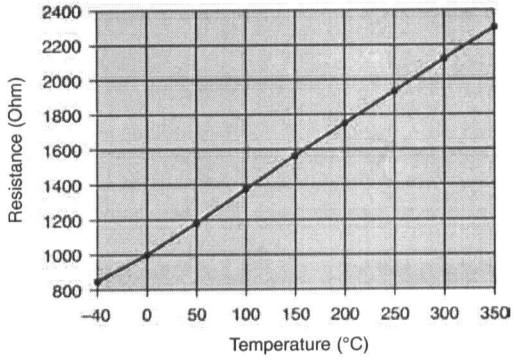

Temperature °C (F°)	Resistance Ω	min.	max.
-40 (-40)		825.90	859.60
0 (32)		980.00	1020.00
40 (104)		1132.30	1178.50
80 (176)		1282.80	1335.10
120 (248)		1431.50	1489.90
160 (320)		1578.30	1642.80
200 (392)		1723.40	1793.70
240 (464)		1866.60	1942.80
280 (536)		2008.10	2090.00
320 (608)		2147.70	2235.40
360 (680)		2285.50	2378.80
400 (752)		2421.50	2520.30

Control values

Motor speed

Control stage	*AIRTRONIC* D2	*AIRTRONIC* D4
• Power	4800 U/min ± 140 U/min	4400 U/min ± 130 U/min
• Fast	4000 U/min ± 120 U/min	3600 U/min ± 100 U/min
• Medium	2800 U/min ± 80 U/min	2800 U/min ± 80 U/min
• Slow	2000 U/min ± 60 U/min	1600 U/min ± 50 U/min
• Adjustment		
- in circulation mode with temperature sensor, internal	600 U/min ± 20 U/min	600 U/min ± 20 U/min
- In fresh air mode with temperature sensor, external	0 U/min	0 U/min
• Ventilation	4800 U/min ± 140 U/min	3600 U/min ± 100 U/min

Resistance values

Component	*AIRTRONIC* D2 -12V	*AIRTRONIC* D2 -24V	*AIRTRONIC* D4 -12V	*AIRTRONIC* D4 -24V
Glow plug	0.5 Ω ± 0.05 Ω	2 Ω ± 0.2 Ω	0.5 Ω ± 0.05 Ω	2 Ω ± 0.2 Ω
Fuel metering pump	10 Ω ± 0.5 Ω	36 Ω ± 1.8 Ω	10 Ω ± 0.5 Ω	36 Ω ± 1.8 Ω
Operator control unit set value potentiometer	1750 - 2080 Ω ± 80 Ω	1750 - 2080 Ω ± 80 Ω	1750 - 2080 Ω ± 80 Ω	1750 - 2080 Ω ± 80 Ω

Switching value

Component	*AIRTRONIC* D2 / D4
Overheating sensor	160°C - 170°C measured in the control stage "power"and at a clearance of 300 mm from the hot air outlet

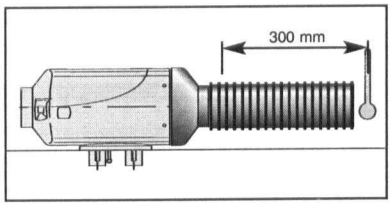

Exhaust value

	AIRTRONIC D2 / D4
CO^2 in exhaust in control stage "fast"	7.5 -12.5 Vol. %
Soot number as per Bacharach	<4

Repair Instructions

Removing the cover
Removing and checking the control unit
Removing the glow pin
Removing the lining
Removing and checking the overheat and flame sensor
Installing the overheat and flame sensor
Dismantling the heat exchanger
Removing the combustion air blower
Removing the combustion chamber

Caution: Remove power from the heater prior to any disassembly by unplugging main connection or removing main fuse.
Carefully check all seals and O-rings and replace where necessary.
Clean all parts before reassembly and check for any signs of damage, replace where necessary.

Removing the cover from the *AIRTRONIC*
Unlock both seal plates, lift cover and pull to the front.
Note:
The cover must always be removed from the AIRTRONIC for all repair stages. You may have to wait for the device to cool down.
The cable harness can exit from the left or right of heater shell.

Cover ①
Seal Plates ②

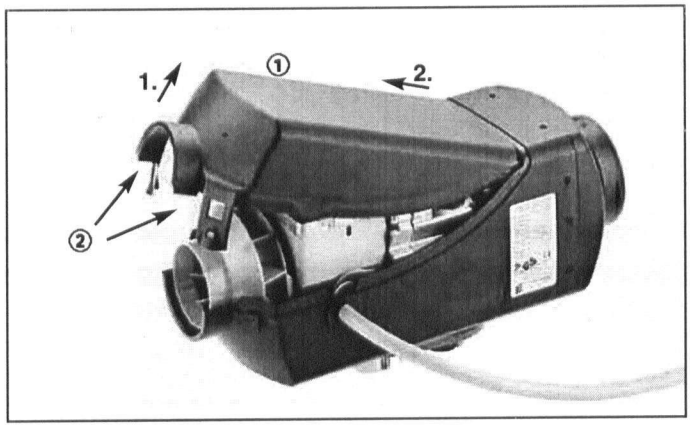

Removing the control unit
Remove the ***AIRTRONIC*** cover.
Unscrew fastening screw, press retaining brackets together, lift out control unit. Unclip the lines from the holder of the control unit (observe the positions of the lines). Remove the bushing (lower part) from the outer case. Disconnect the control unit from the controller. The control unit can now be removed.
Note:
When reassembling the control unit, ensure that the lines are correctly clipped in the holder of the control unit, and that the connectors are plugged into the control unit (non-interchangeable).

Fastening screw ①
Retaining brackets ②
Control unit ③
Bushing ④

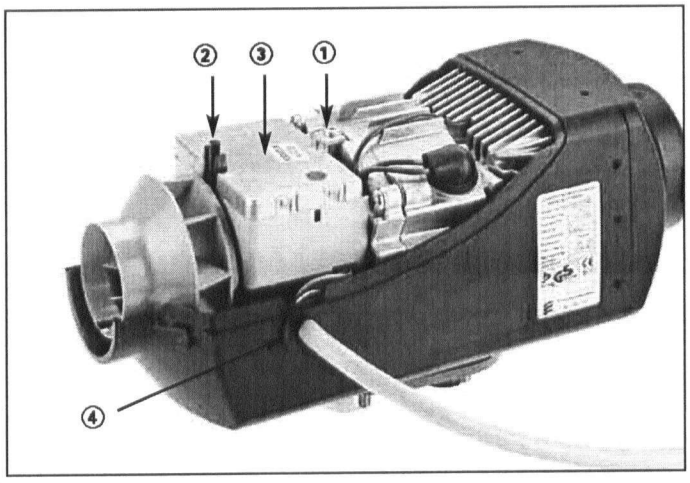

Note: Control unit can only be checked while on heater.

Checking the control unit.
A test instrument is necessary to check the control unit in a dismantled state. The test instrument is connected up to the PC and with special software can display run times on certain parts and give a visual of heater in operation.
Part number: 22 1524 89 00 00
Adapter P/N: 22 1000 31 86 00

Heater Casing Disassembly

- Remove the *AIRTRONIC* cover.
- Remove the control unit.

Disconnect the connector of the glow pin cable harness from the control unit.
Remove the rubber grommet and use the special tool (SW 12) to unscrew the glow pin.
The special tool is included with the glow pin.
Tighten torque of the glow pin : 6 $^{+0.5}$ Nm

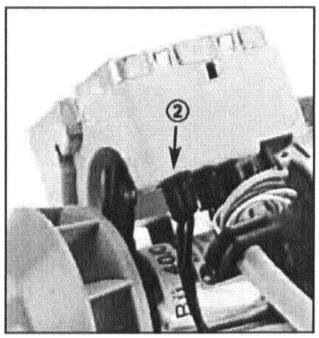

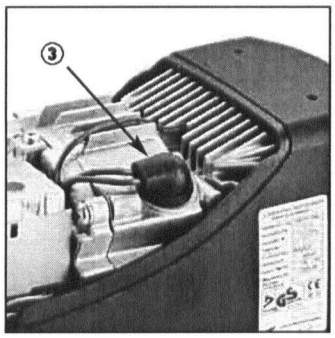

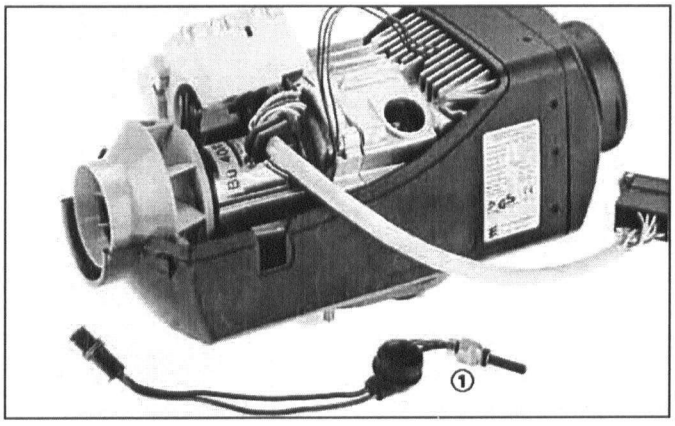

Note:

When the glow pin has been removed, check the screen of the support in installed state for any contamination. The screen must be replaced if the surface is covered with carbon.

Glow Pin ①
Connector of glow pin cable harness ②
Rubber bushing ③

Removing the screen

Pull the screen out of the support with pointed pliers. Blow out the support with compressed air.
If necessary, carefully pierce with a wire.

The special tool has to be used to install the new screen. The special tool is included with the screen. Push the screen onto the special tool, watching the position of the recess. The recess must be positioned at right angles (90°) to the axis of the heater.

Push the tool with the screen carefully as far as it will go, ensuring that the bore (ø 2.7 mm) for the glow plug ventilation is free. See illustration 1.

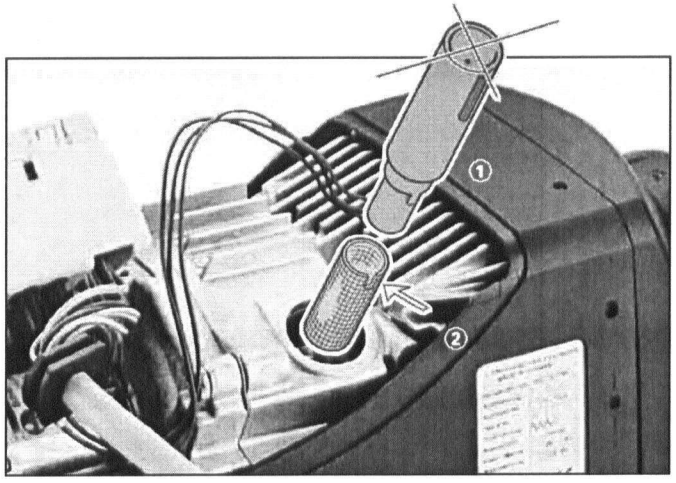

① Special tool with lining
② Position of recess

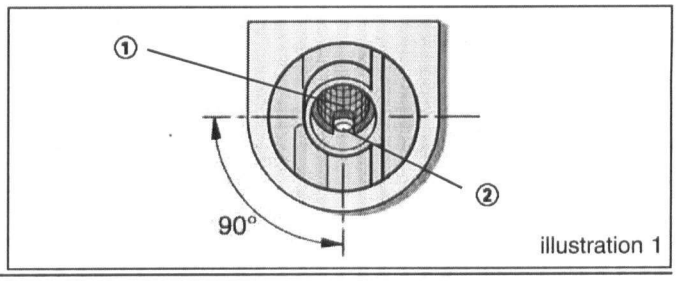

illustration 1

Screen ①
Bore (Ø 2.7 mm) for glow pin ventilation ②

Removing the overheat sensor / flame sensor

- Remove the *AIRTRONIC* cover.
- Remove the control unit.

Disconnect both connectors of the overheating / flame sensor cable harness from the control unit.
Unlock clip from sensor.
Remove overheat/flame sensor.

Cable harness for overheat/flame sensor ①
clip ②

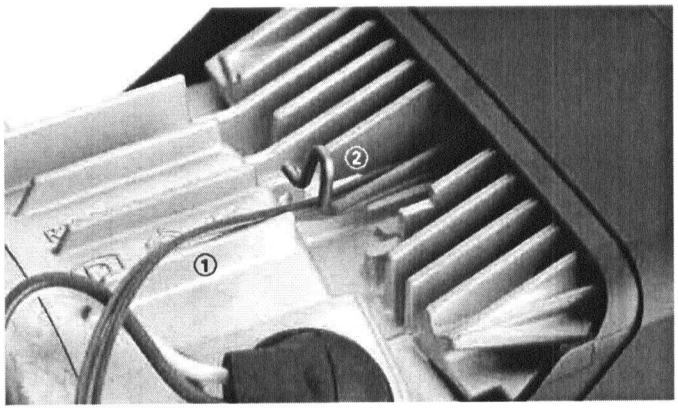

Checking the overheat / flame sensor
Observe a maximum temperature of 320° C for checking the sensor.
Overheat sensor
Check the overheat sensor with a digital multimeter. If the resistance value is outside the set point indicated in the values, on pg.26 then the sensor must be replaced.

Flame Sensor
Check the flame sensor with a digital multimeter. If the resistance value is outside the set point indicated by the values table on pg 26, then the sensor must be replaced.

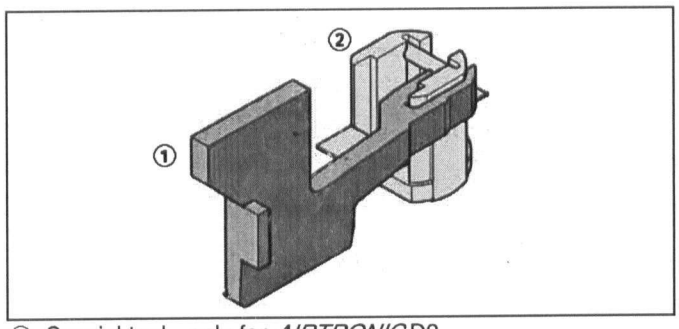

① Special tool - only for *AIRTRONIC* D2
② Overheat sensor / flame sensor

Installing the overheat / flame sensor

For *AIRTRONIC* D2 (Assembly using purpose made tool) mount the special tool on the sensor.
Place the sensor on the heat exchanger using the special tool. The special tool slides on the heat exchanger until the sensor meets the collar (installation site of the sensor).
Lock the sensor in place and remove the purpose made tool. It is then vital to check that the sensor sits flat on the heat exchanger. If necessary use a mirror and lamp to aid correct assembly.
Route the cable harness sensor along the clip eyelet to the control unit and connect.

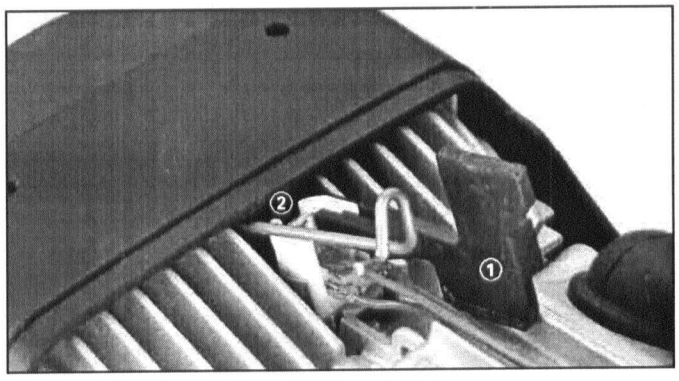

① Special tool - only for *AIRTRONIC* D2
② Overheat sensor / flame sensor

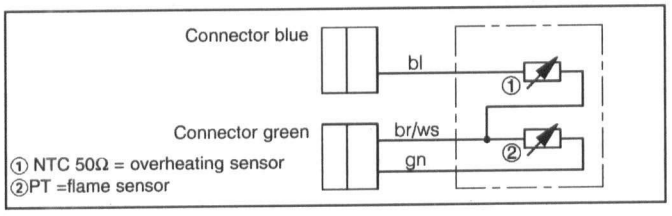

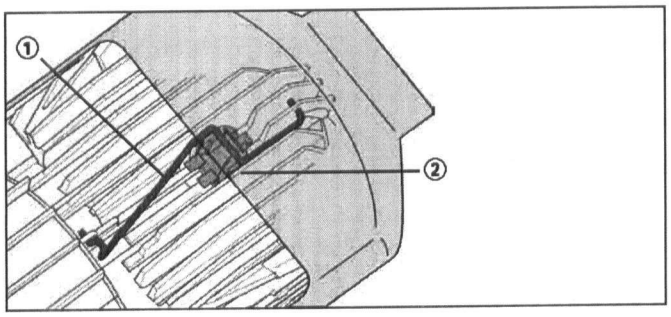

① Clip
② Overheat sensor / flame sensor

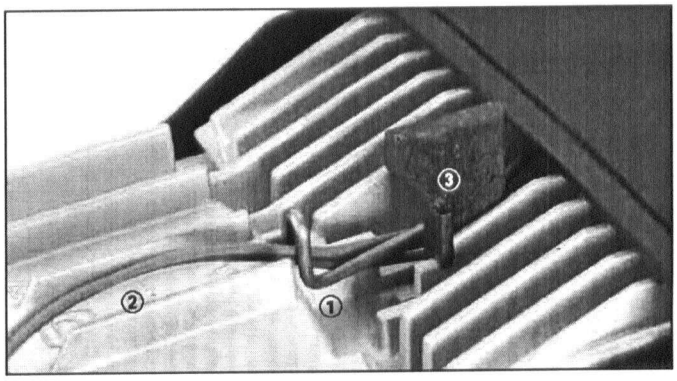

① Clip
② Cable harness - overheat/ flame sensor
③ Special tool - only necessary for the *AIRTRONIC* D2

Dismantling the heat exchanger
Removing the combustion air blower

- Remove the *AIRTRONIC* cover.
- Remove the control unit.

Remove the flange seal.
Take the *AIRTRONIC* out of the outer case (lower part).
Unscrew the 4 fastening screws from the combustion air blower.
Remove the combustion air blower and the seal from the heat exchanger.

Important!
When reassembling the combustion air blower, a new seal is always required.

Tighten the 4 fastening screws of the combustion air blower in the series shown in the drawing, with a tightening torque of 4 $^{+0.5}$ Nm.

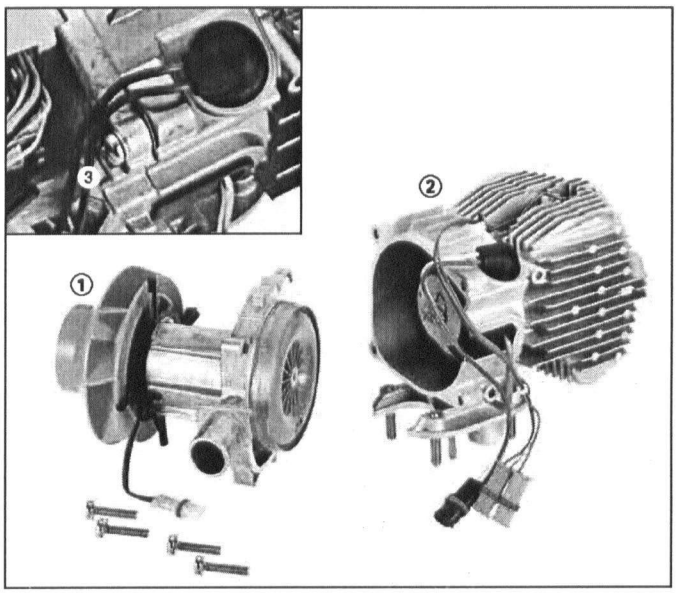

① Combustion Air blower
② Heat Exchanger
③ Fastening screws

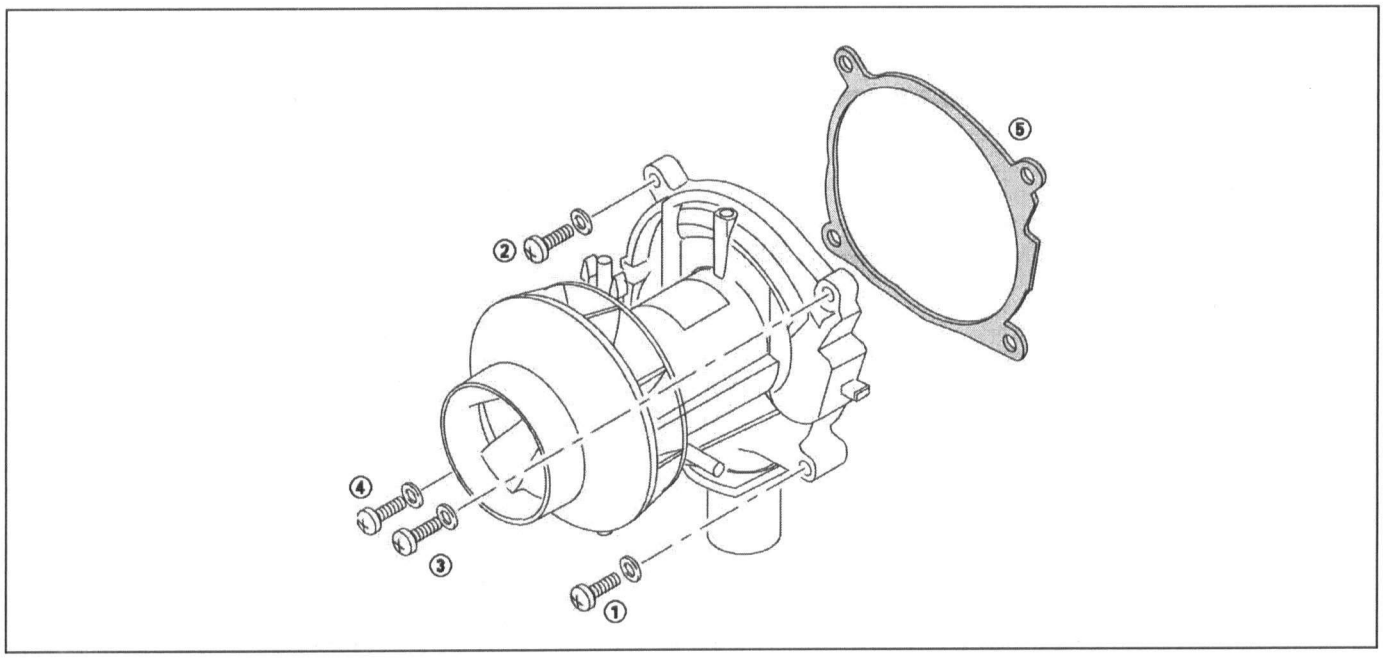

① - ④ Tighten the fastening screws in this sequence with a tightening torque of 4 $^{+0.5}$ Nm
⑤ Always replace the seal between combustion air blower and heat exchanger

Removing the combustion chamber

- Remove the *AIRTRONIC* cover.

Remove the flange seal.
Take the *AIRTRONIC* out of the outer case (lower part).

- Remove control unit (see previous pages).
- Remove glow pin (see previous pages).
- Remove combustion air blower (see previous pages).

Unscrew the fastening screws.
For *AIRTRONIC* D2 = 3 fastening screws
For *AIRTRONIC* D4 = 4 fastening screws

Pull the combustion chamber out to the front and remove the seal from the heat exchanger.

Note!
When reassembling the combustion chamber, the seal, which has been enclosed with the spare part, must always be replaced.

Tighten the fastening screws of the combustion chamber with a torque of 5 $^{+0.5}$ Nm.

Note:
If the heat exchanger is being replaced, the overheat / flame sensor must be dismantled and mounted to the new heat exchanger (see previous pages).

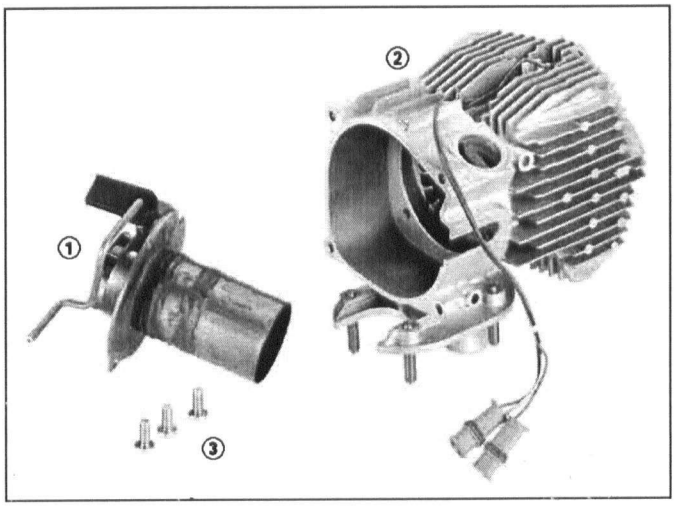

① Combustion chamber
② Heat Exchanger
③ Fastening screws
AIRTRONIC D2 = 3 fastening screws
AIRTRONIC D4 = 4 fastening screws

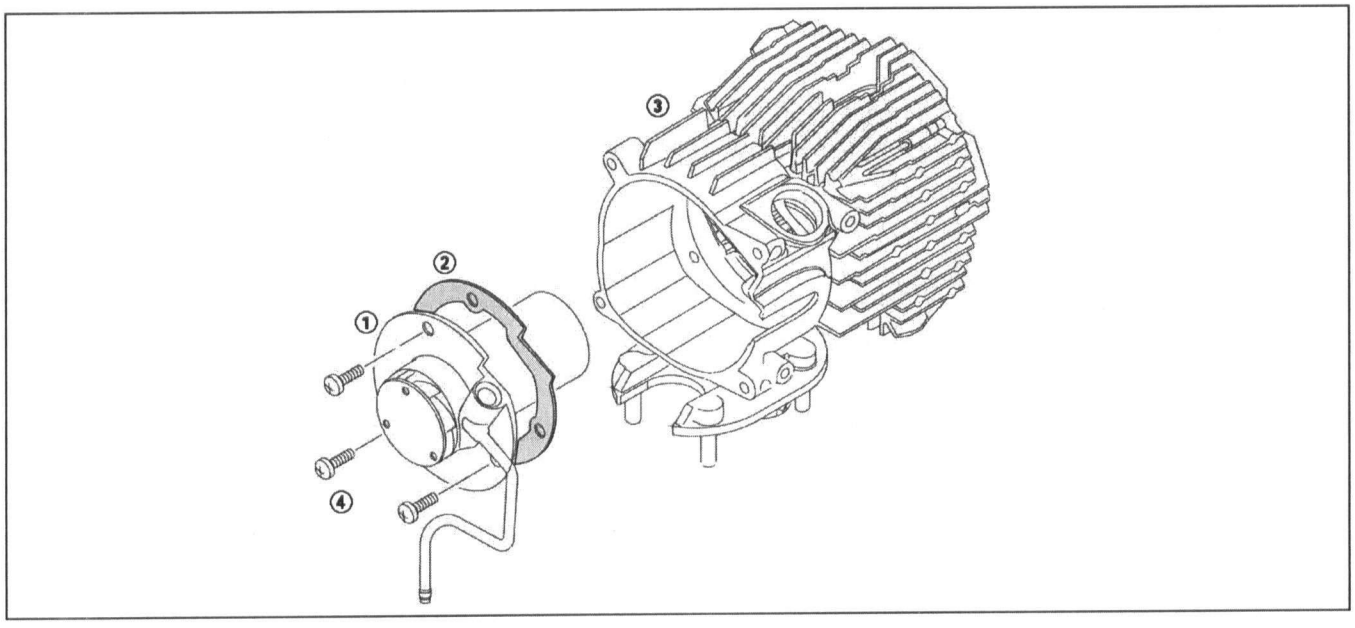

① Combustion chamber
② Seal between combustion chamber and heat exchanger - must always be replaced.
③ Heat exchanger
④ Fastening screws
AIRTRONIC D2 = 3 fastening screws
AIRTRONIC D4 = 4 fastening screws

AIRTRONIC D2 / D3 / B / D4

Service Parts Diagram

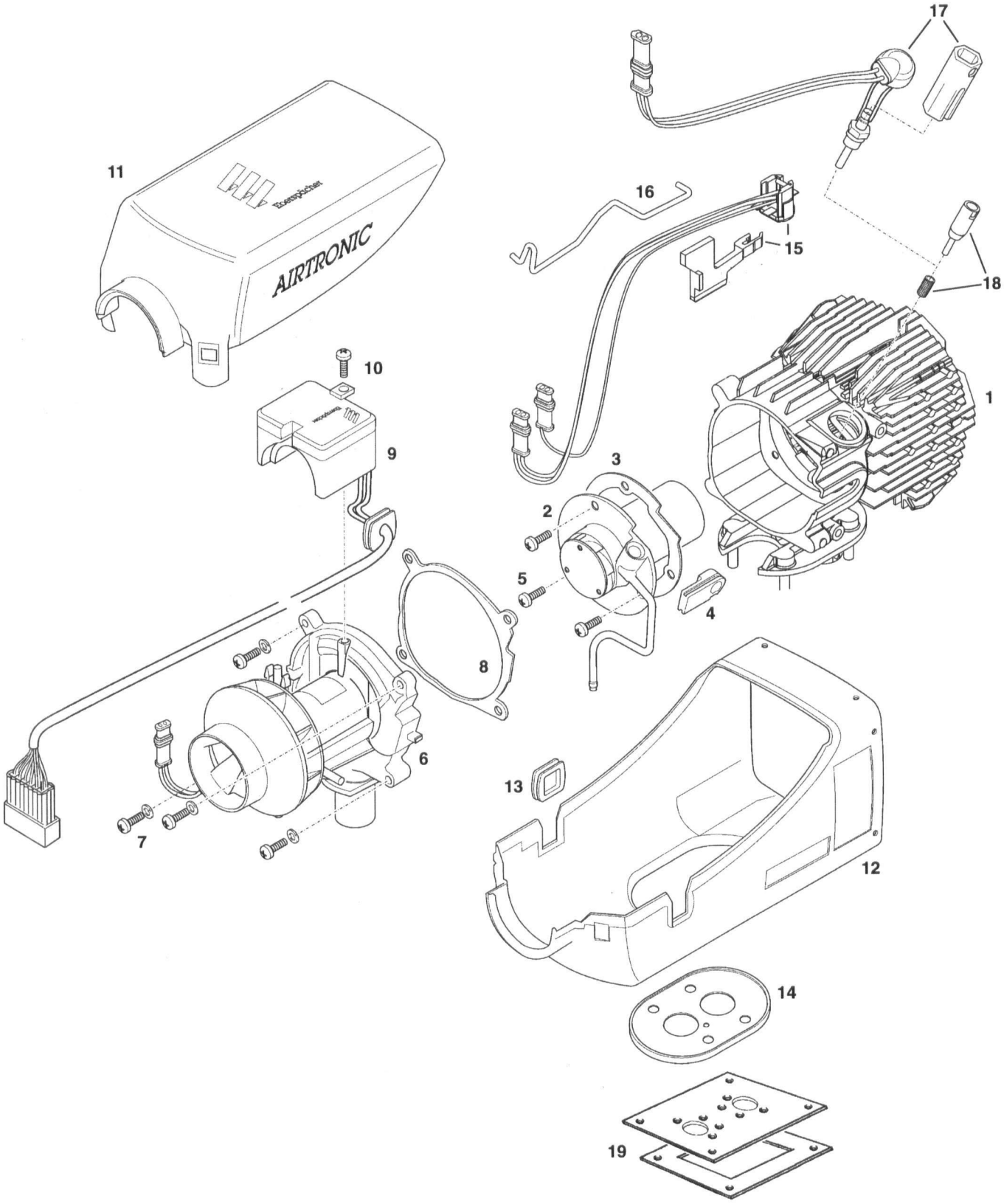

AIRTRONIC D2 / D3 / B / D4

Ref. No.	Description	Part Number	20 1812	25 2069	25 2070	25 2326	25 2113	25 2114	25 2144	25 2145	25 2317	25 2318	25 2327
1	Heat exchanger	25 2069 06 01 00	•	•	•	•							
		25 2113 06 01 00				•	•	•	•	•	•	•	•
2	Burner	25 2069 10 01 00		•		•							
		25 2113 10 01 00					•	•	•	•	•	•	•
		20 1812 10 01 00	•										
3	Gasket seal	25 2069 06 00 01	•	•	•	•							
		25 2113 06 00 01					•	•	•	•	•	•	•
4	Grommet	25 2069 06 00 02	•	•	•	•	•	•	•	•	•	•	•
5	Fillister head bolt, M 5 x 12 (3 required)	103 10 348	•	•	•	•							
	Fillister head bolt, M 5 x 12 (4 required)	103 10 348					•	•	•	•	•	•	•
6	Blower motor	12V 25 2069 99 20 00	•	•		•							
		24V 25 2070 99 20 00			•								
		12V 25 2113 99 20 00					•		•		•	•	•
		24V 25 2114 99 20 00						•		•			
		12V 25 2144 99 20 00							•				
		24V 25 2145 99 20 00								•			
7	Fillister head bolt, M 5 x 25	Locally available hardware	•	•	•	•	•	•	•	•	•	•	•
8	Gasket , blower	25 2069 01 00 03	•	•	•	•							
		25 2113 01 00 03					•	•	•	•	•	•	•
9	Control unit	24V 22 5102 00 10 01			•								
		12V 22 5101 00 10 05					•						
		24V 22 5102 00 10 03						•					
		12V 22 5101 00 10 06							•				
		24V 22 5102 00 10 06								•			
		12V 22 5101 00 10 12									•		
		12V 22 5101 00 10 11										•	
		12V 22 5101 00 10 13				•							
		12V 22 5101 00 10 14											•
		Hella 12V 22 5101 00 30 01		•									
		Hella 12V 22 5101 00 30 05					•						
10	Fillister head bolt, M 4 x 10	103 10 349	•	•	•	•	•	•	•	•	•	•	•
11	Upper casing	25 2069 01 06 00	•	•	•	•							
		25 2113 01 00 01					•	•	•	•	•	•	•
12	Lower casing	25 2069 01 01 00	•	•	•	•							
		25 2113 01 01 00					•	•	•	•	•	•	•
13	Grommet	25 2069 01 00 01	•	•	•	•	•	•	•	•	•	•	•
14	Flange seal	25 2069 01 00 02	•	•	•	•	•	•	•	•	•	•	•
15	Overheat sensor / Flame sensor with tool	25 2069 01 02 00	•	•	•	•	•	•	•	•	•	•	•
16	Clip	25 2069 01 02 02	•	•	•	•							
		25 2113 01 02 02					•	•	•	•	•	•	•
17	Glow pin with socket wrench	12V 25 2069 01 03 00	•	•		•	•			•	•	•	•
		24V 25 2070 01 03 00			•			•	•				
18	Glow pin screen with tool	25 2069 10 01 02	•	•	•	•	•	•	•	•	•	•	•
19	Mounting plate with hardware and seal	CA0 00 019	•	•	•	•	•	•	•	•	•	•	•

AIRTRONIC D2 / D3 / B / D4
Service Parts Diagram

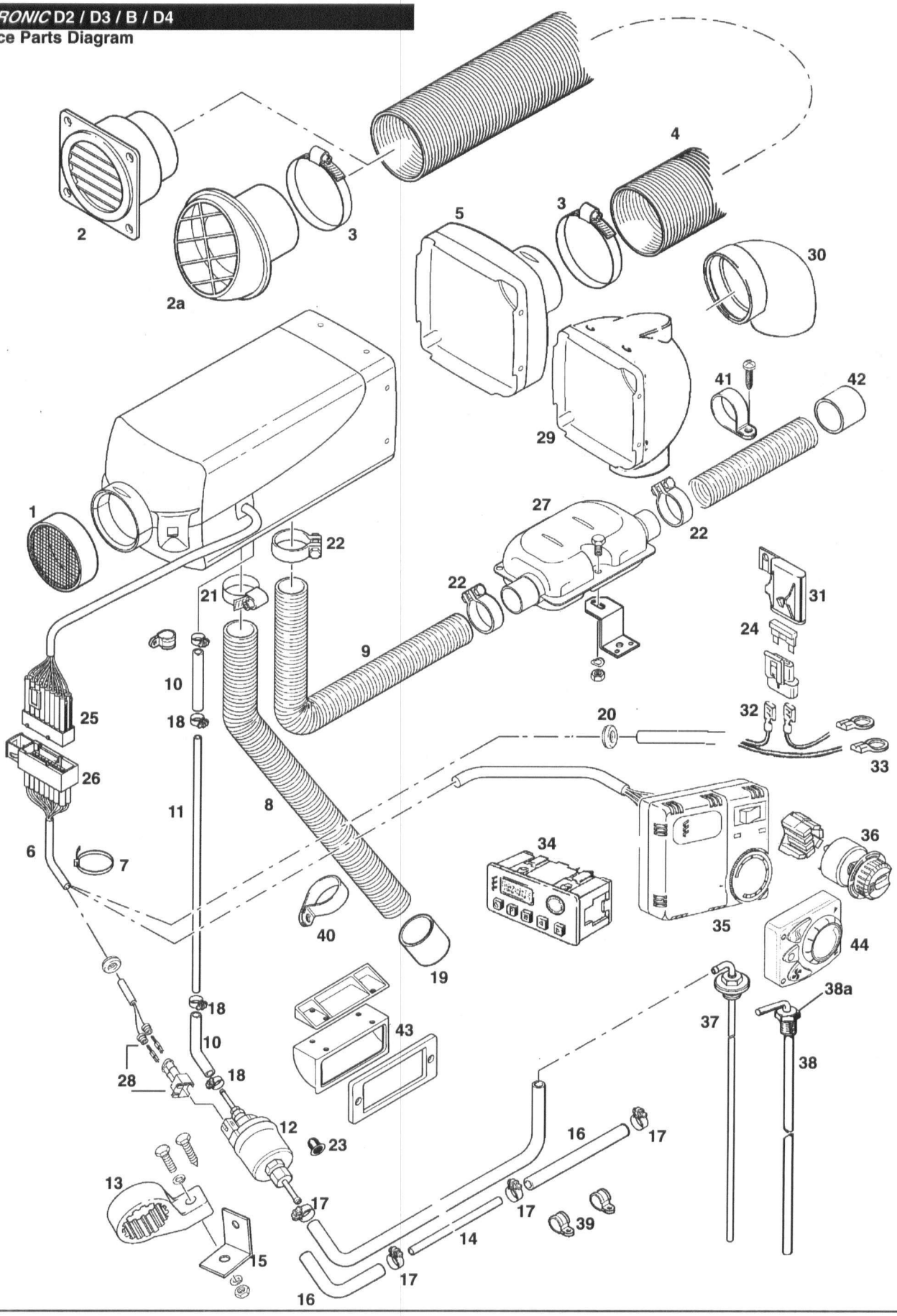

AIRTRONIC D2 / D3 / B / D4

Ref. No.	Description		Part Number	Model #	20 1812	25 2069	25 2070	25 2326	25 2113	25 2114	25 2144	25 2145	25 2317	25 2318	25 2327
1	Safety screen	ø 60	25 1688 80 06 00		•	•	•	•							
		ø 75	25 1552 05 01 00						•	•	•	•	•	•	•
2	Warm air deflector	ø 60	20 1577 89 06 00		•	•	•	•						•	
2a		ø 90	20 1609 80 09 00						•	•	•	•	•	•	•
		ø75	22 1050 89 21 00							•	•	•	•	•	•
3	Clamp	ø 50-70	CA1 10 047		•	•	•	•							
		ø 70-90	CA1 10 042						•	•	•	•	•	•	•
4	Flexible air hose	ø 60	10 2114 31 00 00		•	•	•	•							
		ø 90	10 2114 37 00 00						•	•	•	•	•	•	•
		ø 75	10 2114 34 00 00						•	•	•	•	•	•	•
5	Straight outlet hood	ø 60	22 1000 01 00 16		•	•	•	•							
		ø 90	22 1000 01 00 19						•	•	•	•	•	•	•
		ø 75	22 1000 01 00 18						•	•	•	•	•	•	•
6	Main harness		CA1 60 201		•	•	•	•	•	•	•	•	•	•	•
	• short harness		CA1 60 205		•	•	•	•	•	•	•	•	•	•	•
7	Cable ties		CA1 00 005		•	•	•	•	•	•	•	•	•	•	•
8	Air intake	ø25 mm	360 00 006		•	•	•	•	•	•	•	•	•	•	•
9	Flexible exhaust	ø24 mm	25 1774 80 02 00		•	•	•	•	•	•	•	•	•	•	•
10	Fuel hose - rubber	3.5 mm	360 75 300		•	•	•	•	•	•	•	•	•	•	•
11	Plastic fuel line	1.5 mm	090 31 118		•	•	•	•	•	•	•	•	•	•	•
12	Fuel metering pump	12V	22 4519 01 00 00		•	•		•		•		•	•	•	•
		24V	22 4518 01 00 00				•		•		•				
13	Clamp for fuel metering pump		22 1000 50 03 00		•	•	•	•	•	•	•	•	•	•	•
14	Plastic fuel line - black	2 mm	090 31 125		•	•	•	•	•	•	•	•	•	•	•
15	Angle bracket		CA0 10 105		•	•	•	•	•	•	•	•	•	•	•
16	Fuel hose - rubber	5 mm	360 75 350		•	•	•	•	•	•	•	•	•	•	•
17	Clamp	11 mm	10 2068 01 10 98		•	•	•	•	•	•	•	•	•	•	•
18	Clamp	9 mm	10 2068 00 90 98		•	•	•	•	•	•	•	•	•	•	•
19	End sleeve with cross bar - 25mm plastic		25 1729 89 00 02		•	•	•	•	•	•	•	•	•	•	•
20	Grommet		20 1280 09 01 03		•	•	•	•	•	•	•	•	•	•	•
21	Intake hose clamp	ø 20-32	10 2065 02 00 32		•	•	•	•	•	•	•	•	•	•	•
22	Clamp	26 mm	152 61 102		•	•	•	•	•	•	•	•	•	•	•
23	Fuel screen		20 1312 00 00 06		•	•	•	•	•	•	•	•	•	•	•
24	Blade fuse	20 amp	CA1 07 005		•	•	•	•	•		•		•	•	•
		10 amp	CA1 07 006				•		•		•				
25	Plug connector - Kit		22 1000 31 80 00		•	•	•	•	•	•	•	•	•	•	•
26	Housing - Kit female		22 1000 31 81 00		•	•	•	•	•	•	•	•	•	•	•
*27	Muffler		25 1864 81 01 00		•	•	•	•	•	•	•	•	•	•	•
28	Connectors for fuel metering pump - Kit		22 1000 31 87 00		•	•	•	•	•	•	•	•	•	•	•
*29	90° Air outlet hood	ø 60	22 1000 01 00 20		•	•		•							
		ø 75	22 1000 01 00 22						•	•	•	•	•	•	•
		ø 90	22 1000 01 00 23						•	•	•	•	•	•	•
*30	90° Bend	ø 60	25 1688 89 00 01		•	•	•	•							
		ø 75	25 1482 89 00 05		•	•	•	•	•	•	•	•	•	•	•
31	Fuse holder with terminals		CA1 07 001		•	•	•	•	•	•	•	•	•	•	•
32	Terminals		CA1 90 043		•	•	•	•	•	•	•	•	•	•	•
33	3/8' Ring terminals 10-12 G		CA1 90 014		•	•	•	•	•	•	•	•	•	•	•
*34	7 day timer with thermostat	12V	22 1000 30 40 00		•	•		•		•		•	•	•	•
		24V			•	•	•	•	•	•	•	•	•	•	•

***AIRTRONIC* D2 / D3 / B / D4**

Ref. No.	Description		Part Number	Model # 20 1812	25 2069	25 2070	25 2113	25 2114	25 2144	25 2145	25 2317	25 2318	25 2326	25 2327
35	Thermostat	12V	301 00 154	•	•		•	•		•	•	•	•	
		24V	301 00 153			•			•		•			
*36	Operating switch (rotary)	12V	25 1895 71 00 00	•	•		•	•		•	•	•	•	•
		24V	25 1896 71 00 00			•			•		•			
37	Standard fuel pick up pipe	2 mm	CA0 12 056	•	•	•	•	•	•	•	•	•	•	•
* 38	Fuel pick up pipe (Compression fitting type)		CA0 12 042	•	•	•	•	•	•	•	•	•	•	•
* 38a	Compression fittings	1/4" NPT	CA0 12 044	•	•	•	•	•	•	•	•	•	•	•
		3/8" NPT	CA0 00 031	•	•	•	•	•	•	•	•	•	•	•
		1/2" NPT	CA0 12 005	•	•	•	•	•	•	•	•	•	•	•
39	P-clamp w/Lining	10 mm	152 00 139	•	•	•	•	•	•	•	•	•	•	•
40	P-clamp	25 mm	152 10 048	•	•	•	•	•	•	•	•	•	•	•
41	P-clamp	28 mm	152 10 051	•	•	•	•	•	•	•	•	•	•	•
42	End-sleeve	24 mm	25 1482 80 00 01	•	•	•	•	•	•	•	•	•	•	•
	Fault code retrieval device		CA1 05 020	•	•	•	•	•	•	•	•	•	•	•
43	Bezel kit for 7 day timer		25 1482 70 01 00	•	•	•	•	•	•	•	•	•	•	•
44	Mini Controller		22 1000 32 07 00	•	•	•	•	•	•	•	•	•	•	•

*indicates optional features

2nd Printing - June 2006
Printed in Canada
P/N: 610-103-0606

Espar Products, Inc.

6099A Vipond Drive
Mississauga, Ontario
Canada L5T 2B2

(905) 670-0960 Canada

(905) 670-0728 Fax

(800) 387-4800 Canada & U.S.A.

www.espar.com

A member of the Worldwide **Eberspächer** Group of Companies